HEWLETT® PACKARD

Rack Solutions Catalog

Rack Cabinets
Rack Accessories
Rackmount Kits
Testmobile Carts
Rack Integration

Hewlett-Packard handles your toughest measurement challenges. We applied that expertise to design this family of 19-inch, EIA standard racks to handle your everyday racking needs.

Some accessories and rackmount kits are available in two different colors, parchment white and quartz gray. Whenever this is the case, you will find different product numbers for each color.

Product information is also available from the worldwide web at:

http://www.hp.com/go/enclosures

Table of Contents

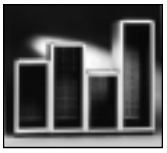

Rack Cabinets

Features 1
Specifications 4

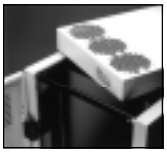

Rack Accessories

Power Distribution Units 5
Front and Rear Doors 7
Tie Kits 8
Side Panels 8
Extractor Fans 9
Ballast 10

Rackmount Kits

Monitor Rackmount Kits 11
Controller Rackmount Kits 11
Keyboard Rackmount Kits 12
Instrument Rackmount Kits 13
- Handles & Rackmount Flanges 14
- Rackmount Adapter Kits 16
- Support Shelf, Slides & Filler Panels 17
- Lock Link Kits 18
- Rail Kits 19
- Slide Kits 20

Small Parts

Drawers 21
Plain Shelf 21
Worksurface 22
Rack Filler Panels 22
Mounting Hardware 22

Testmobiles & Accessories

Features 25
Specifications 27
Accessories 28

Rack Integration

Integration Services 31
Integration Layout 33
Cooling 35
Stability 38

Price List

Price List 43

Index

by Product Number 51

HP Rack Value!

HP racks have been designed and engineered to Save Time and Money for our customers!

- Package design —
  Designed for easy unloading from the pallet.
- Pallet re-use —
  The pallet has been tested with up to 1000 pounds of equipment in the rack and can be used to ship an integrated system to your end user customer saving you time and money.
- Fully assembled rack —
  Customers receive HP racks fully assembled and ready for equipment installation saving time and money.
- Unique column and rail design —
  Equipment installation time is cut in half because of HP's unique column and support rail design. Our special cutouts in the columns, spaced at EIA intervals and rail hooks assure instruments are mounted easily in the right place the first time!

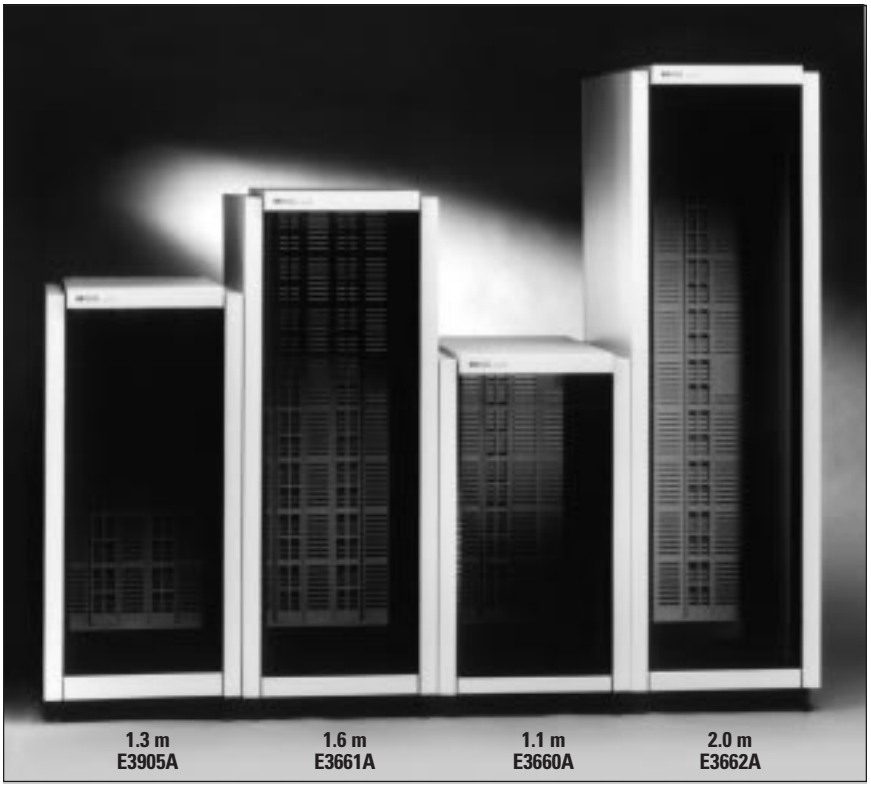

Standard Rack Cabinets

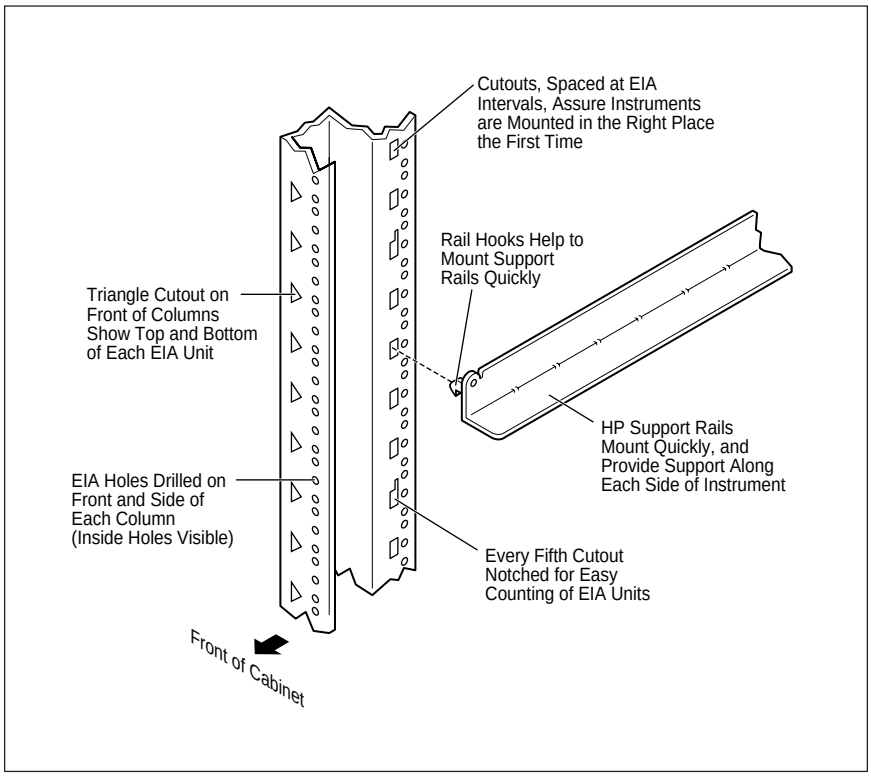

HP Column and Rail Design

Enhance Your Instrument Investment

HP racks are specifically designed for HP's test and measurement equipment, virtually ensuring a perfect fit. Designed for today's competitive environment, four heights are offered to accommodate any system: 1.1 m, 1.3 m, 1.6 m, and 2.0 m. All racks are deep enough to hold HP instruments of varying sizes. HP racks will also accommodate non-HP equipment making them suitable for the customer of a mixed instrument environment.

Load a Rack in Less Time

The design of HP support rails can cut in half the time required to install equipment in a rack. The rails hang on discrete slots on the vertical mounting columns, corresponding to each EIA unit in the rack. Vertical adjustment between instruments is minimized by selecting the proper rail. The system was specifically designed to minimize the time required to install HP instrumentation and computers, and can be used with other equipment as well.

Rack Systems Fast and Easily

Racks are shipped already assembled, ready for immediate configuration. No time is lost assembling racks or tracking down missing parts.

More than just a way of storing instruments, the racks reflect HP's reputation for quality and design. A sturdy frame provides structural integrity, which allows lightweight, easy-to-lift off side panels for installation and easy access to equipment and cables. Rails are placed into keyed slots in the vertical columns, resulting in quick and accurate positioning.

Use Vertical Space Efficiently

Vertical space within a rack is measured in industry-standard EIA units, where 1 EIA unit = 1.75 inches (44.5 mm). Equipment height is also specified in EIA units.

System configuration is made easier by counting EIA units from the base of the rack. A seamless fit of instrument and rail is ensured. Other racks offer support rails that can be continuously adjusted vertically within a rack, which offers infinite adjustability, but can increase installation time.

Manage Power Requirements

A power management system is available by ordering an optional power distribution unit (PDU) that is vertically mounted behind the rack rear column and supplies power to the cabinet. It can be controlled by a single, illuminated master switch located on the front of the rack.

Protect from Heat Buildup

System-generated heat is removed by natural convection through a ventilation path incorporated in the roof of the racks. For greater heat dissipation, an optional, easy to install top-mounted extractor fan is available.

Secure Instruments During Test

Both the rear door and the optional Plexiglas front door can be locked to secure against disruption of tests or unauthorized removal of system components. The symmetrical rear door design allows it to be mounted for opening to either left or right, useful for multi-bay configurations.

Move Racks Easily

Each rack is provided with four 3-inch diameter, smooth-rolling, heavy-duty casters to facilitate moving racks over short distances. Four lifting hooks conveniently concealed in the top of the rack allow for transport, even when fully loaded. Each hook can support 227 kg (500 lbs) to easily handle the maximum recommended gross weight for a loaded rack of 816 kg (1800 lbs).

Enhance Stability

A retractable anti-tip stabilizer that can be extended into place with ease is standard on all racks. It provides temporary anti-tip capability for slide mounted products when they are in their extended position. Use the optional anti-tip ballast kit when permanent anti-tip capability is desired.

Improve Cable Management

HP's 1.1 m–2.0 m racks have an additional 100 mm of internal space that is available at the rear of the rack for installation of PDUs and as a convenient location for cables, which are routed out the bottom of the rack. The added rear space also enhances air flow.

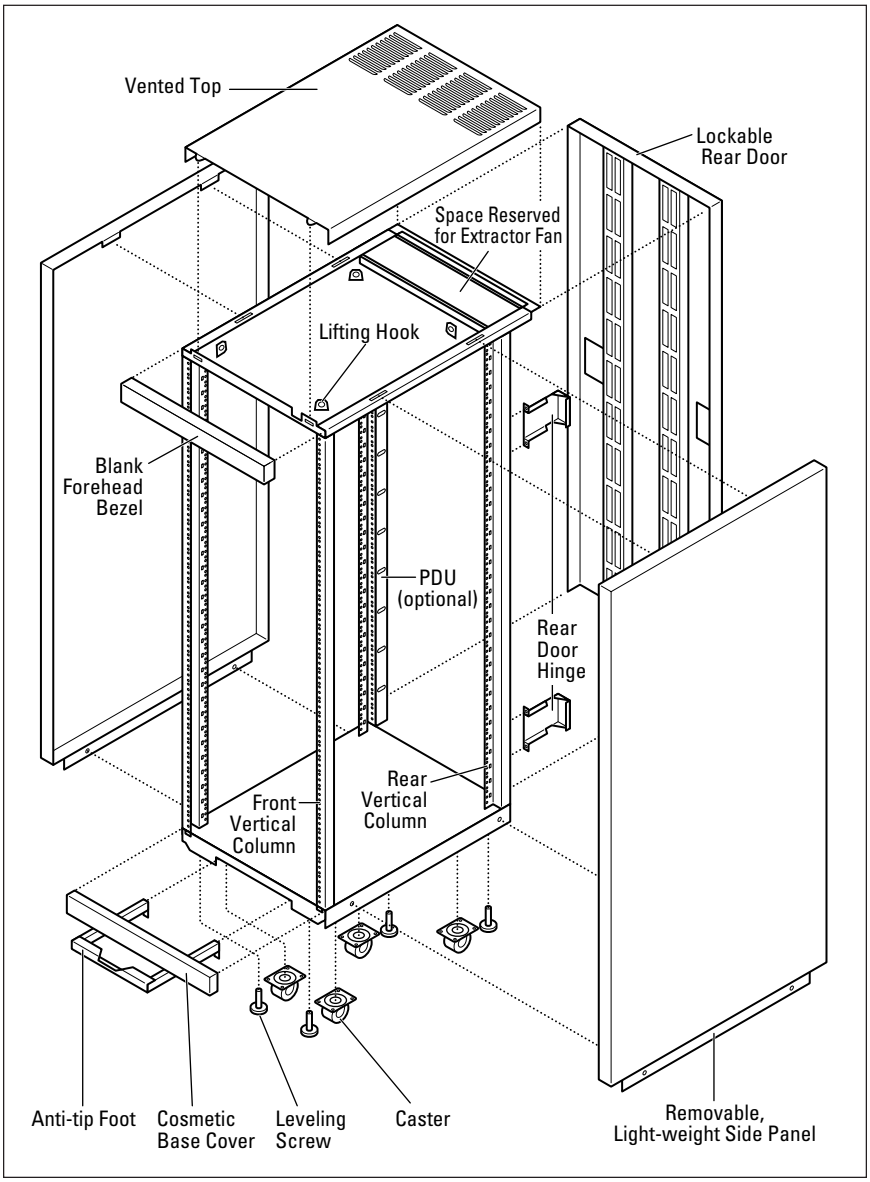

Exploded View

Rack Solution for HP Systems

Hewlett-Packard offers 19-inch EIA (Electronics Industries Association) rack cabinets tailored to meet the needs of HP test and measurement instrumentation customers. Rack mounting is fast and easy with unique design features. A selection of options and accessories provides flexibility to meet the vast majority of racking applications.

Standard Rack Includes:

- Vented, lockable rear door
- Easily removable side panels
- Vented top
- Solid base
- Leveling screws
- Retractable anti-tip foot
- 4 Concealed lifting hooks
- One system II rail kit (Instruments mountable in both front and rear columns)
- 3-Inch heavy duty casters
- Attractive color
- Rack shipped assembled (Shipping Cost Included in Price)

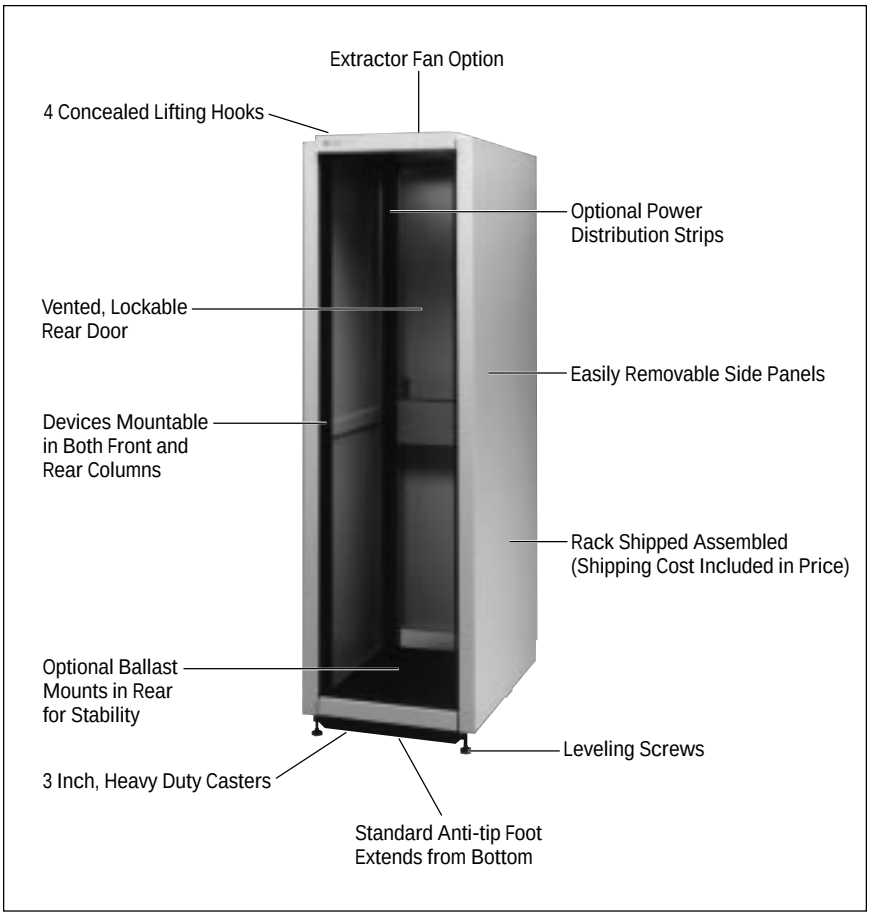

Bare Rack Option

Bare Rack for Multi-Bay Solutions—1.6 m and 2.0 m

A multi-bay solution is included in our product line. Our multi-bay users can order bare racks *without* the standard side panels and rear door.

This product offering allows our customers the flexibility to mix and match our rack products and eliminate extra parts, saving money, resources and integration time.

Rack Cabinet Product Numbers

STANDARD RACKS

Height	Prod. No.	Color	EIA Units
1.1 m	E3660A	Parchment	21
1.3 m	E3905A	Parchment	25
1.3 m	E7590A	Quartz Gray	25
1.6 m	E3661A	Parchment	32
2.0 m	E3662A	Parchment	41

BARE RACKS

Height	Prod. No.	Option	EIA Units
1.6 m	E3661A	AXH	32
2.0 m	E3662A	AXH	41

Rack Specifications

WEIGHT		
Rack	E3660A	81 kg (179 lbs) empty
	E3905A/E7590A	89 kg (196 lbs) empty
	E3661A	100 kg (221 lbs) empty
	E3662A	116 kg (255 lbs) empty
Casters Rating	318 kg (700 lbs) each, 816 kg (1800 lbs) total Casters have a point contact convex cross section	
Lift Hook Rating	227 kg (500 lbs) each Total system and cabinet weight is a maximum 816 kg (1800 lbs), static. Lift cabinet using all four (4) hooks.	

Material
Frame/columns: 13 Ga. cold rolled steel.
Side Panels: 18 Ga. cold rolled steel.

Ventilation
Vented top cap.
100 mm additional internal rear space enhancing air flow.

E3660A
- **A** 1120 mm (44.1 in)
- **B** 933.45 mm (36.75 in)
- **C** 120.81 mm (4.76 in)

E3905A / E7590A
- **A** 1320 mm (51.9 in)
- **B** 1111.25 mm (43.75 in)
- **C** 120.81 mm (4.76 in)

E3661A
- **A** 1620 mm (63.8 in)
- **B** 1422.4 mm (56.0 in)
- **C** 131.83 mm (5.19 in)

E3662A
- **A** 2020 mm (79.5 in)
- **B** 1822.45 mm (71.75 in)
- **C** 131.83 mm (5.19 in)

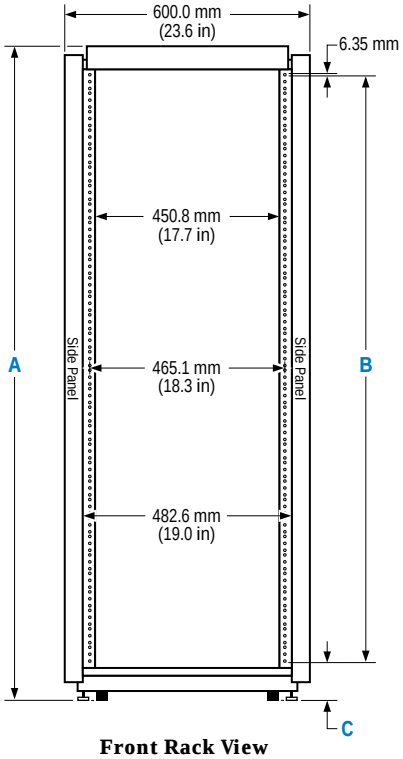

Front Rack View

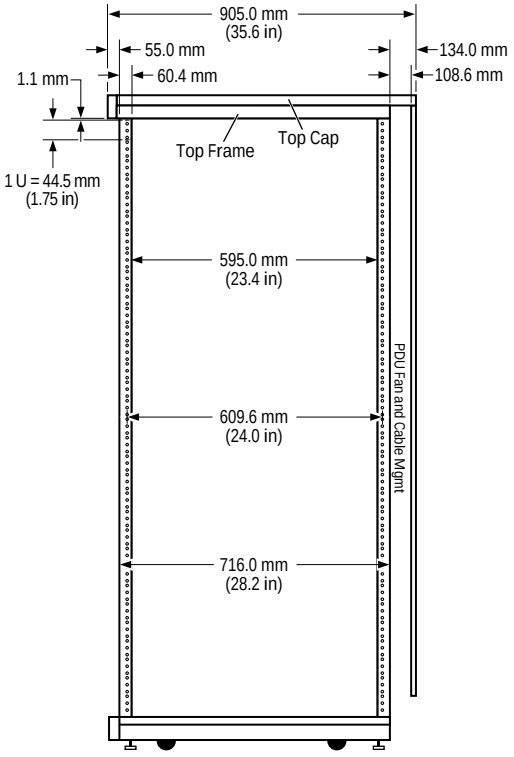

Side Rack View

Dimensions		Height	Width	Depth	EIA Units
E3660A	**Exterior**	1120 mm (44.1 in)	600 mm (23.6 in)	905 mm (35.6 in)	21
	Interior*	933.45 mm (36.8 in)	450.8 mm (17.8 in)	851 mm (33.5 in)	
E3905A / E7590A	**Exterior**	1320 mm (51.9 in)	600 mm (23.6 in)	905 mm (35.6 in)	25
	Interior*	1111.25 mm (43.8 in)	450.8 mm (17.8 in)	851 mm (33.5 in)	
E3661A	**Exterior**	1620 mm (63.8 in)	600 mm (23.6 in)	905 mm (35.6 in)	32
	Interior*	1422.5 mm (56.0 in)	450.8 mm (17.8 in)	851 mm (33.5 in)	
E3662A	**Exterior**	2020 mm (79.5 in)	600 mm (23.6 in)	905 mm (35.6 in)	41
	Interior*	1822.5 mm (71.8 in)	450.8 mm (17.8 in)	851 mm (33.5 in)	

Front to rear column hole spacing: 610 mm (24 in) *Interior = EIA units = Rackmountable space.

Power Distribution Units (PDUs)

The power distribution unit is a convenient way to supply power to everything mounted in the rack. The PDU is mounted vertically behind the rear column and does not reduce vertical mounting space in the rack.

A lighted master power switch is supplied with the PDU. The switch provides rapid system shutdown in case of emergency or turns off power conveniently. The switch controls a relay in 1 or 2 PDUs and uses low voltage signal lines for safety and to minimize electrical noise.

- Circuit breakers are provided on both hot (live) and neutral lines.
- All PDUs are single phase.
- A maximum of two PDUs can be installed in a rack.
- The top receptacle of all PDUs is configured as IEC-320 and is intended for the extractor fan. It can be used for other purposes if no fan is installed.
- Different power cords and sizes are offered. Select the one that is appropriate for your location and rack solution.

PDU Order Options

PDUs can be ordered as **a rack order option** (factory installed) or as **an accessory** (customer installed).

To order a PDU as a rack option (1 PDU installed at the factory):

1. Determine the rack model required.

E3660A	1.1 m
E3905A	1.3 m
E3661A	1.6 m
E3662A	2.0 m

2. Decide the PDU voltage needed. 100-120V (N.A.) or 200-240V (Int'l) (200-240V N.A. not available as a rack option.)
3. Identify the appropriate order option according to the PDU voltage.

Voltage	Order Option
100–120V (N.A.)	–AW3
200–240V (Int'l)	–AW5

4. Add the order option to the rack model when placing the order. *Only 1 PDU can be factory installed – if 2 are required, order the second as an accessory.*

To order a PDU as an accessory (installation required at the customer site):

1. Identify the size of the rack.
2. Determine the voltage required.
3. Using the Product Number tables below, identify the appropriate PDU.
4. If this is the first PDU to be installed in the rack, a PDU installation kit is required. If this is the second PDU, an installation kit is not needed.
5. Place the order.

PDU Product Numbers*

PDUs for 1.1 m and 1.3 m Racks

Product Number	Voltage	Region	Order Option Equivalent
E4451A	100–120V	North America	–AW3
E4452A	200–240V	North America	—
E4453A	200–240V	International	–AW5

PDUs for 1.6 m and 2.0 m Racks

Product Number	Voltage	Region	Order Option Equivalent
E4455A	100–120V	North America	–AW3
E4456B	200–240V	North America	—
E4457B	200–240V	International	–AW5

* *See following page for PDU specifications.*

PDU Installation Kits

A **PDU Installation Kit** is **required** to install a PDU into a rack.

- If the lighted master power switch on the PDU will be used, order PDU installation kit E4472A or E7685A. This kit includes a replacement forehead bezel containing a cutout.
- If the master power switch connected to the PDU will not be used, order PDU installation kit E7686A.

PDU	Required Parts
1st	PDU Installation Kit. Qty 1 of either E4472A or E7686A.
2nd	None – the second PDU can be installed with the existing PDU installation kit.

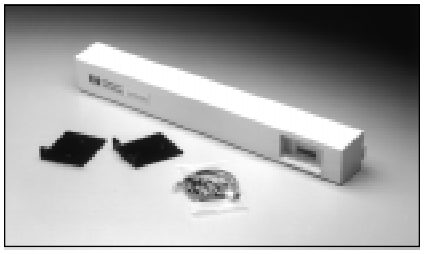

PDU Installation Kit E4472A/E7685A

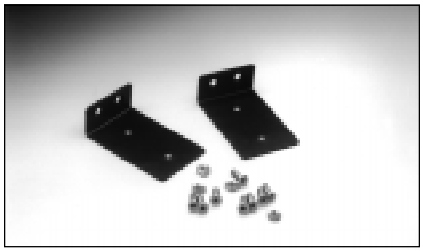

PDU Installation Kit E7686A

PDU Installation Kits Product Numbers

Prod. No.	Description
E4472A	Includes forehead bezel with switch cutout. Parchment white color.
E7685A	Includes forehead bezel with switch cutout. Quartz gray color.
E7686A	Brackets only.

PDU Specifications

PDUs for 1.1 m and 1.3 m Racks

	E4451A North America	**E4452A** North America	**E4453A** International
Voltage	100–120V	200–240V	200–240V
Maximum Current	16 amps	16 amps	16 amps
Power Cord Length	2 m (78.74 in)	2 m (78.74 in)	2 m (78.74 in)
Plug	5-20P non-locking 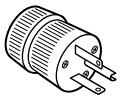	L6-20P locking 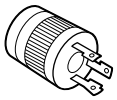	No plug; cord is unterminated
Receptacle Types: **NEMA 5-15R** 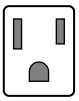	5 NEMA 5-15R Receptacles	—	—
IEC-320 C13 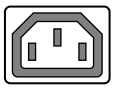	1 IEC-320 C13 Receptacle	6 IEC-320 C13 Receptacles	6 IEC-320 C13 Receptacles
Standards	Meets UL/CSA standards	Meets UL/CSA standards	Meets IEC-950 and VDE standards

PDUs for 1.6 m and 2.0 m Racks

	E4455A North America	**E4456B** North America	**E4457B** International
Voltage	100–120V	200–240V	200–240V
Maximum Current	16 amps	16 amps	16 amps
Power Cord Length	2 m (78.74 in)	2 m (78.74 in)	2 m (78.74 in)
Plug	5-20P non-locking 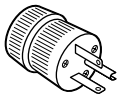	L6-20P locking 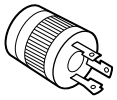	No plug; cord is unterminated
Receptacle Types: **NEMA 5-15R** 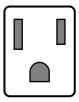	9 NEMA 5-15R Receptacles	—	—
IEC-320 C13 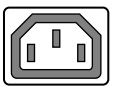	1 IEC-320 C13 Receptacle	10 IEC-320 C13 Receptacles	10 IEC-320 C13 Receptacles
IEC-320 C19 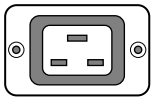	—	1 IEC-320 C19 Receptacle	1 IEC-320 C19 Receptacle
Standards	Meets UL/CSA standards	Meets UL/CSA standards	Meets IEC-950 and VDE standards

Plexiglas® Front Door

An attractive, transparent smoke-colored Plexiglas front door gives a consistent appearance to the rack and is lockable to control access to the instruments, and peripherals mounted in the rack.

- Front doors can be installed to hinge on either the left or right side for maximum flexibility.
- Customer installable with minor installation.
- Door kits include all necessary mounting hardware.
- Provides 64 mm (2.52 in) space to accommodate instrument front panels.
- Front doors do not interfere with access to the master power switch.

An extractor fan is highly recommended to assist cooling when a front door is mounted. (See page 9 for fan details.)

E4463A Plexiglas Front Door

- Front doors mount into an outer set of holes on the front columns and do not interfere with EIA mounting holes.
- Spacers between the door frame and Plexiglas create an airflow space.

Front Door Product Numbers

Prod. No.	Rack Height	Description
E4460A	1.1 m	Plexiglas and Parchment white
E4461A	1.3 m	Plexiglas and Parchment white
E4462A	1.6 m	Plexiglas and Parchment white
E4463A	2.0 m	Plexiglas and Parchment white

Rear Doors

Rear doors are standard on all HP rack cabinets, except the 'bare rack' (option–AXH).

So why would you want to purchase a rear door?

- For a 'bare rack' used in a multi-bay configuration.
- To use a different style rear door.

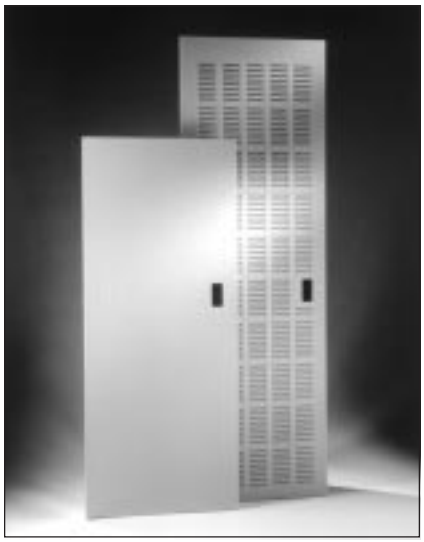

Solid and Vented Rear Doors

Features of the rear door kit include:

- Can be installed to hinge on either the left or right side for maximum flexibility.
- Customer installable.
- All necessary mounting hardware.
- Lockable for access security.

Rear Door Product Numbers

Solid Rear Doors

Prod. No.	Rack Height	Description
E4476A	1.6 m	Parchment white
E4478A	2.0 m	Parchment white

Vented Rear Doors

Prod. No.	Rack Height	Description
E4477A	1.6 m	Parchment white
E4479A	2.0 m	Parchment white

Tie Kits

Tie kits are used to join two or more racks together to create a multi-bay configuration. The tie kit bolts the columns of adjacent racks together and completes the multi-bay solution with a cosmetic finish.

Tie Kit Contents

- Includes all necessary hardware.
- Customer installable.
- Some instruments might need to be removed for tie kit installation.

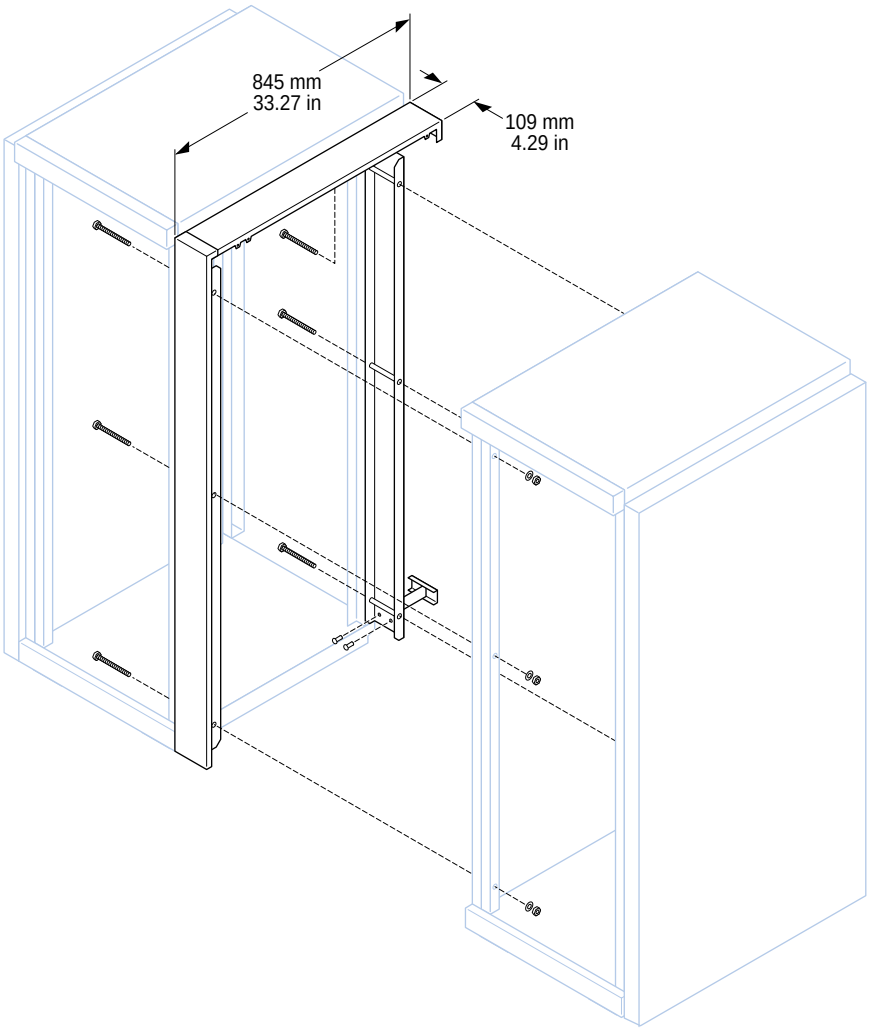

Tie Kits Product Numbers

Prod. No.	Rack Height	Description
E4466A	1.1 m	Parchment white
E4467A	1.3 m	Parchment white
E4468A	1.6 m	Parchment white
E4469A	2.0 m	Parchment white

Side Panels

Extra side panels are available for 1.6 m and 2.0 m racks. These might be needed for a bare rack or if a side panel becomes damaged while in use.

- Side panels are easily installed or removed by lifting on or off.
- Each panel is secured to the rack by two screws at the panel bottom.

Side Panel Product Numbers

Prod. No.	Rack Height	Description
E4458A	1.6 m	Parchment white
E4459A	2.0 m	Parchment white

Extractor Fans

Extractor fans are used to increase air flow through the rack cabinet. These fans enhance natural convection cooling by increasing the airflow in the rack. Use of the fan enhances the movement of warm air from the bottom of the rack up and out through the vented top cap.

- **Fans are highly recommended for racks with a front door.** If a front door is not installed, a fan is generally not needed.
- Select an appropriate fan that fits your needs and your local AC voltage.
- Maximum 1 fan per rack.

Fan Specifications

	E4470A / E4471A (200 cfm)	E7687A (700 cfm)
Airflow	200 cfm (340 cmh)	700 cfm (1189 cmh)
Acoustic noise	43 dB	74 dB
AC input	100–120V / 200–240V (50–60 Hz)	220V (50–60 Hz)
AC current	1 ampere maximum	.825 ampere maximum
Weight	3.6 kg (8 lbs)	11.5 kg (25 lbs)

200 cfm – Extractor Fan

The customer installable extractor fan mounts easily under the top cap into the top frame of the rack and doesn't reduce the space available for rackmounting instruments.

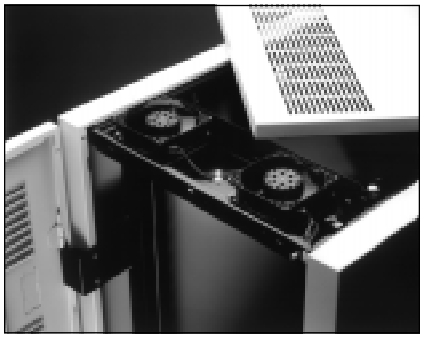

- Requires 1 IEC-320 receptacle.

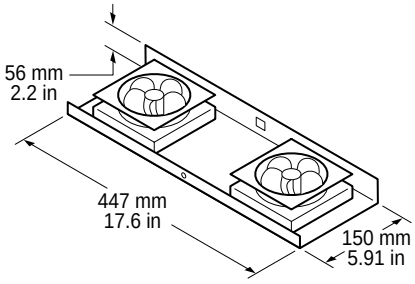

200 cfm Fan Product Numbers

Prod. No.	Voltage	Description
E4470A	120V	Fits all rack heights
E4471A	220V	Fits all rack heights

700 cfm – Extractor Fan

Customer installable, this fan replaces the existing top cap assembly of the rack cabinet. It adds 1 inch to the height of the rack but does not use any vertical EIA rackmounting space.

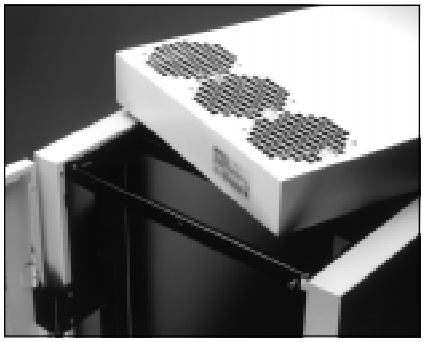

- Requires 2 IEC-320 receptacles.

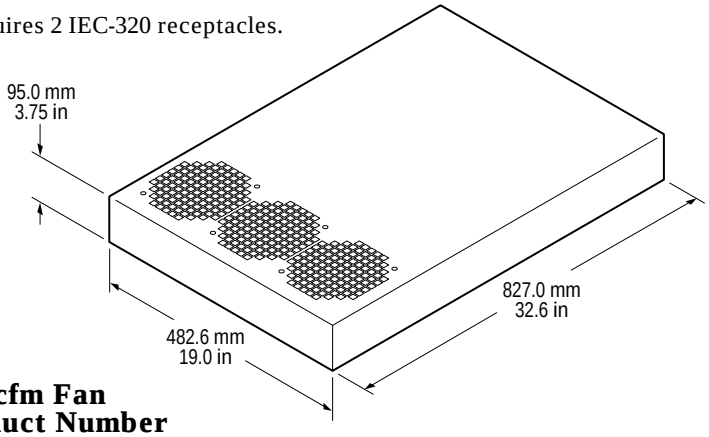

700 cfm Fan Product Number

Prod. No.	Voltage	Description
E7687A	220V	Parchment white Fits all rack heights

Ballast

Ballast is heavy steel that can be mounted in the rear of the rack cabinet to provide anti-tip capability, detering the cabinet from tipping forward if heavy slide-mounted devices are extended from the rack.

HP rack cabinets include a standard, pull-out anti-tip foot that can be extended temporarily for servicing. Ballast provides an extra margin of safety in case someone forgets to pull out the anti-tip foot.

- Each ballast kit contains a 30 lb. ballast and mounting hardware.
- The ballast mounts on the rear columns of the rack and provides a counterweight for equipment that extend out from the front of the rack.

For detailed ballast calculations, see pages 38 – 40

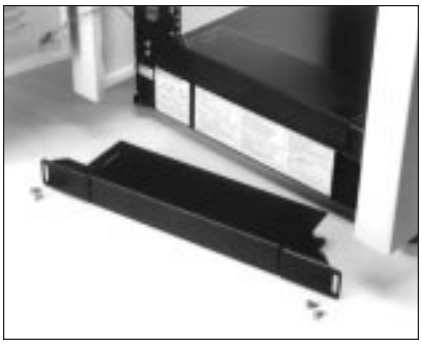

Ballast, Standard Mounting

Ballast, Alternate Mounting

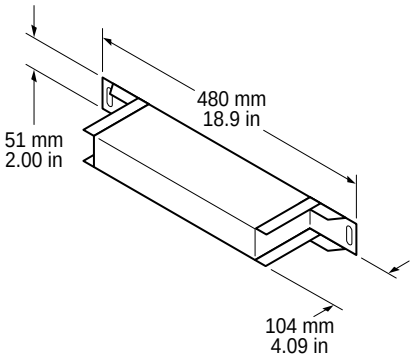

Ballast Product Number

Prod. No.		Description
C2790A	30 lbs	Fits all rack heights

Monitor Rackmount Kit

Product Number: **E5922A**

- Parchment white

Product Number: **J1519A**

- Quartz gray

The HP monitor rackmount kit can accommodate 14–19 inch monitors. The kit consists of a shelf, all required mounting hardware, and cosmetic panels around the monitor.

- EIA units required: **11 EIA U**

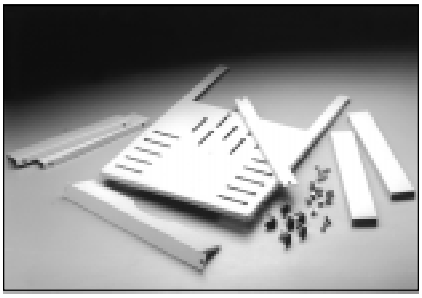

Monitor Rackmount Kit Contents

E5922A Installed in Rack

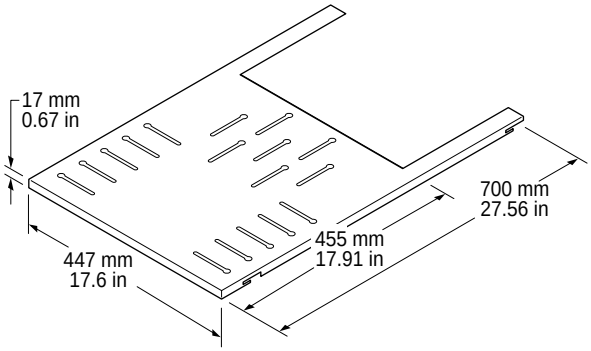

Keyboard and Mouse Rackmount Kits

Select a fixed or retractable keyboard and mouse kit appropriate for your needs. Keyboard and mouse are not included.

Retractable Keyboard
Product Number: **E4079A**
- Parchment white

Product Number: **J1518A**
- Quartz gray

Keyboard security is available by using a front door on the rack cabinet.

- EIA units required: **2 EIA U**
- Includes all mounting hardware.

E4079A Retracted

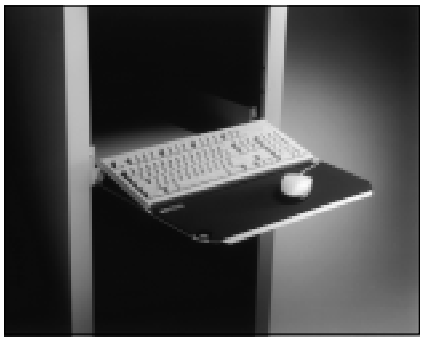

E4079A Ready for Use

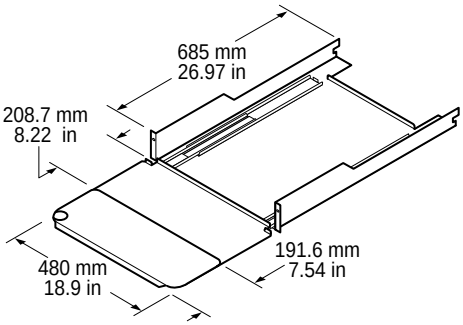

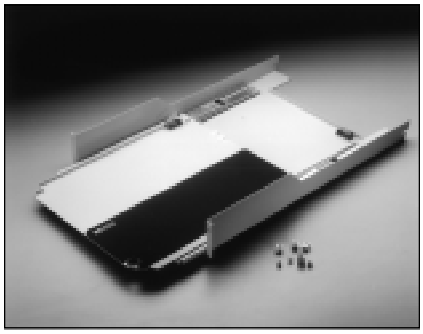

Retractable Keyboard Kit Contents

Fixed Keyboard
Product Number: **E3900A**
- Parchment white

Product Number: **E7714A**
- Quartz gray

Mounts on the outside of the front columns.

- EIA units required: **1 EIA U**
- All mounting hardware is included.

Note: Cannot be used with a front door.

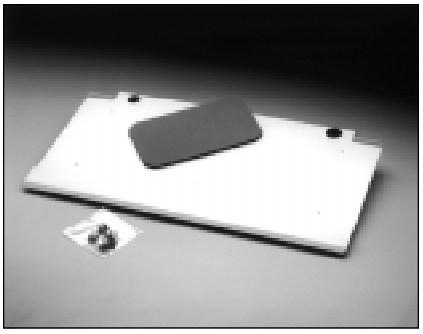

Fixed Keyboard Kit Contents

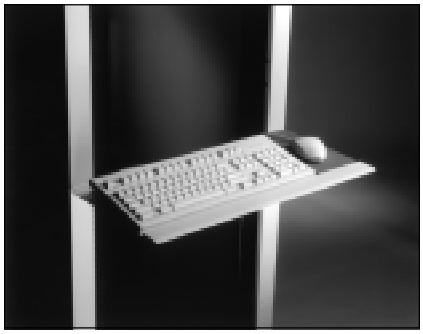

E3900A Installed in Rack

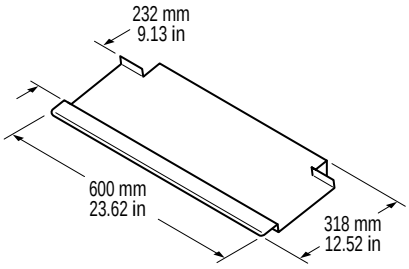

Instrument Rackmount Kits

System II and System II Plus Cabinet Measurements

The System II and System II Plus cabinets are available in standard sizes. As shown in the illustration, instrument depths have 5 sizes and instrument heights have 6 sizes. They are measured in millimeters and inches.

The instrument width is measured in module width (MW). The module width measurement is an important feature for determining rackmounting requirements. 1 MW is equivalent to the full width of the rack.

System II and System II Plus Cabinet Design

HP's modular cabinet system offers bench-stacking and rackmounting versatility. These cabinets are designed for compatibility with EIA and IEC standards, both in width and height.

System II Plus cabinets and accessories are identical in form, fit and function to System II but are different colors for improved visual continuity.

Cabinet Color Change

HP's cabinets have a new color. The previous color was Parchment white and the new color is Quartz gray. Samples of these colors are printed on the inside cover of this catalog.

Order the instrument rackmount kit that matches the color of the instrument. Most instrument rackmount kits are available in both colors.

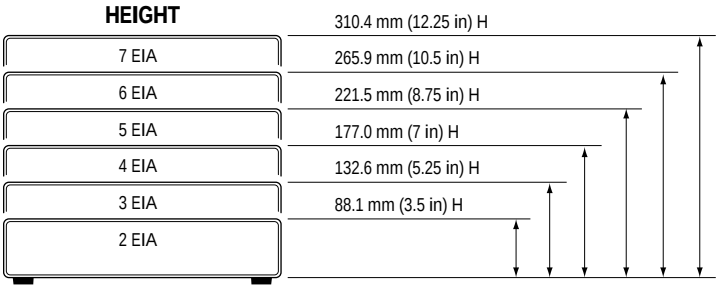

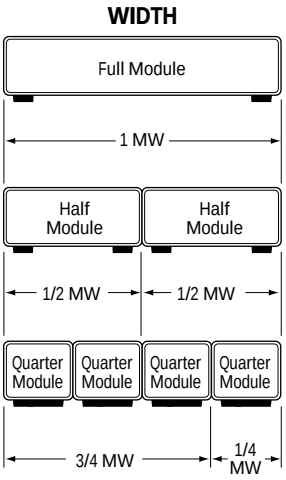

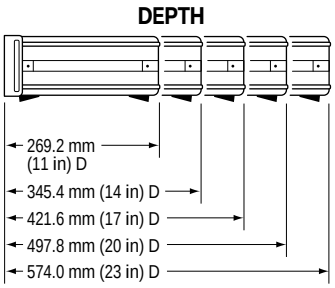

IMPORTANT: The instrument rackmount kits, shown on pages 14-18, include metric fasteners to make them compatible with metric-fastener cabinets. Metric-fastener cabinets are identified with a "metric" embossment in the front bezel casting under the plastic trim strip and on the middle of the rear bezel casting.

If your instrument requires inch fasteners, order 5062-4078 with the instrument rackmount kits. It is important for the user to be aware of these different fasteners to avoid thread damage when attaching the instrument rackmount kits. The inch screw kit contains 28 ea. 8-32 screws and 20 ea. 6-32 screws.

Handles and Rackmount Flanges

Handles and rack flanges are available for all System II cabinets. They find most use on full width modules or combinations of narrower modules locked together to form 1 MW (module width).

Certain instruments are supplied with front handles as part of the selling price. Handles and rack flanges can be supplied with most instruments for an added cost by specifying the appropriate option at the time of order. These factory-installed options include,

- Front handles
- Rackmount Flanges
- Handles with Rack Flanges
- Rackmount flanges for instruments with supplied handles

Alternatively, the equivalent mounting hardware may be ordered after receipt of the instrument using the information listed on the following page.

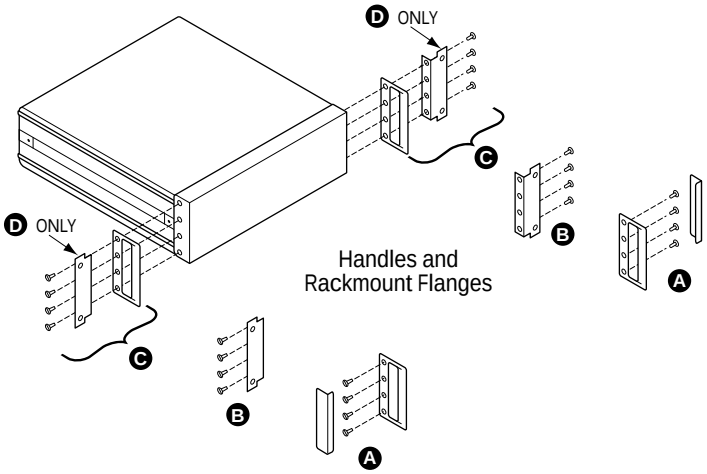

A – Front Handle Kit

B – Rackmount Flange Kit

C – Rackmount Flange Kit with Handles

D – Rackmount Flange Kit for Instruments w/Previously Supplied Handles

See next page for detailed, part number information.

Rackmount Flange Kits

Flange kits are available for all System II instruments. Flanges attach to pre-existing holes in the instrument case.

Handles with Rack Flanges

Handle kits are available for all System II instruments. Handles attach to pre-existing holes in the instrument case.

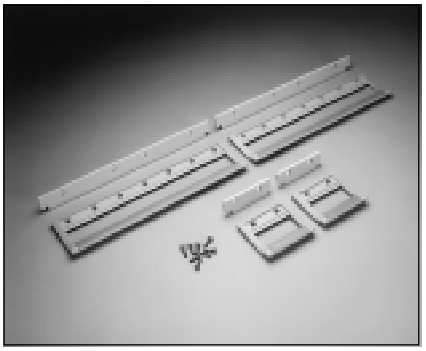

Rackmount Flange Kit for Instruments with Previously Supplied Handles

Certain HP instruments are supplied with front handles. These flange kits have a special cut out to accommodate the handles.

Selecting a Rackmount Flange or Handle Kit

The table below lists the kits available for use after receipt of the equipment.

Field installation is straightforward.

- A plastic trim strip is easily removed and the handle or flange attaches with screws supplied in the kit.
- Before rackmounting, bottom feet must be removed.
- Remember to choose the appropriate kit color to match the instrument.

Required: These rackmount flange kits secure your instrument to the front columns of the rack. You must also select the appropriate rails or slides to support the weight of the instrument in the rack. See page 19-20 for rail and slide information.

Rackmount Flange and Handle Kits Part Numbers

Instrument Module Height	A Front Handle Kit Part No.	B Rackmount Flange Kit[3] Part No.	C Rackmount Flange Kit with Handles Part No.	D Rackmount Flange Kit for Instr. w/previously supplied handles Part No.
Parchment White Color				
88.1 mm (3 1/2 in)	5062-3988	5062-3974[1]	5062-3975[1]	5062-4069[1]
88.1 mm (3 1/2 in)	—	5062-3976[2]	5062-3982[2]	—
132.6 mm (5 1/4 in)	5062-3989	5062-3977	5062-3983	5062-4071
177.0 mm (7 in)	5062-3990	5062-3978	5062-3984	5062-4072
221.5 mm (8 3/4 in)	5062-3991	5062-3979	5062-3985	5062-4073
265.9 mm (10 1/2 in)	5062-3992	5062-3980	5062-3986	5062-4074
310.4 mm (12 1/4 in)	—	5062-3981	5062-3987	—
Quartz Gray Color				
88.1 mm (3 1/2 in)	5063-9226	5063-9212[1]	5063-9219[1]	5063-9232[1]
88.1 mm (3 1/2 in)	—	5063-9213[2]	—	—
132.6 mm (5 1/4 in)	5063-9227	5063-9214	5063-9221	5063-9234
177.0 mm (7 in)	5063-9228	5063-9215	5063-9222	5063-9235
221.5 mm (8 3/4 in)	5063-9229	5063-9216	5063-9223	5063-9236
265.9 mm (10 1/2 in)	5063-9230	5063-9217	5063-9224	5063-9237
310.4 mm (12 1/4 in)	—	5063-9218	5063-9225	—
Kit includes	2 handles + 2 trim strips + metric fasteners	2 flanges + metric fasteners + mounting screws	2 handles + 2 flanges + metric fasteners + mounting screws	2 flanges + metric fasteners + mounting screws

[1] 5062-3974/3975/4069 and 5063-9212/9219/9232 Kits use standard flanges with 1.75 in hole spacing.
[2] 5062-3976/3982 and 5063-9213 Kits use special flange with 3 in hole spacing.
[3] Will not fit onto instruments with previously supplied handles.

Rackmount Adapter Kits

Modules of less than 1 MW can be rackmounted using these kits.

- Individual 1/4 MW or 1/2 MW modules use the kits shown below directly.
- Combinations of 1/4 MW or 1/2 MW (of equal depth) are first joined side-by-side with the Lock Link Kit (5061-9694), then the rackmount adapter kit is applied.
- For combinations of instruments adding to 1 MW, use regular rackmount flange kit.

Kits include attaching screws and front-panel rackmounting screws. Hole patterns conform to EIA and IEC standards.

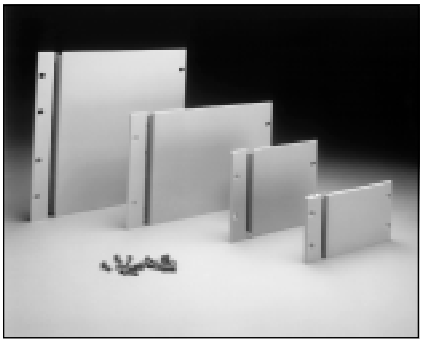

Rackmount Adapter Kits

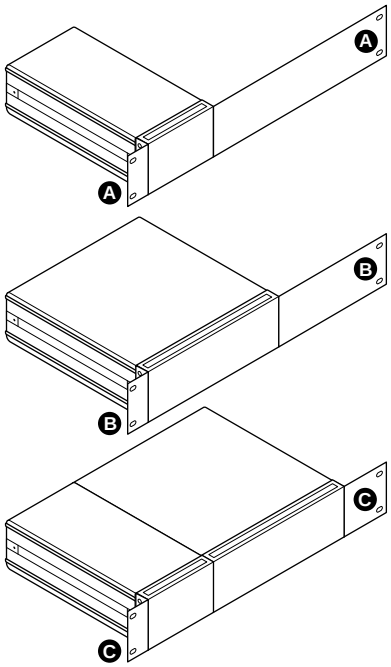

Rackmount Adapter Kit Part Numbers

Instrument Module Height	A Mounts 1/4 MW Modules	B Mounts 1/2 MW or 2 each 1/4 MW[1] Modules	C Mounts 3/4 MW (3 ea. 1/4 MW)[2] or 1/4 & 1/2 MW side by side[1]
Parchment White Color			
88.1 mm (3 1/2 in)	—	5062-3972	5062-3971
132.6 mm (5 1/4 in)	—	5062-3957	—
177.0 mm (7 in)	—	5062-3960	—
Quartz Gray Color			
88.1 mm (3 1/2 in)	5063-9239	5063-9240	5063-9241
132.6 mm (5 1/4 in)	—	5063-9243	—
177.0 mm (7 in)	—	5063-9245	—
Kit includes	1 rack flange + 3/4 MW extension adapter flange + screws	1 rack flange + 1/2 MW extension adapter flange + screws	1 rack flange + 1/4 MW extension adapter flange + screws

[1] Side by side modules of equal depth require Lock Link Kit (5061-9694)
[2] 1/2 MW can be center mounted using two of these kits.

Support Shelf, Slides and Filler Panels

These shelves are available for instruments less than 1 MW.

- Submodules of differing heights, widths, and depths (up to 20 inches deep) can be rackmounted using these support shelves. Any combination of 1/4 MW and 1/2 MW will fit side-by-side up to 1 MW.
- Shelves support up to 50 pounds.
- Special filler panels are available to close up vacant spaces either on top of a short module or side-by-side.
- The slide kit is required. It provides ready access to internal shelf areas and **is required for installation of the support shelf**. Slide kit includes brackets and mounting hardware.

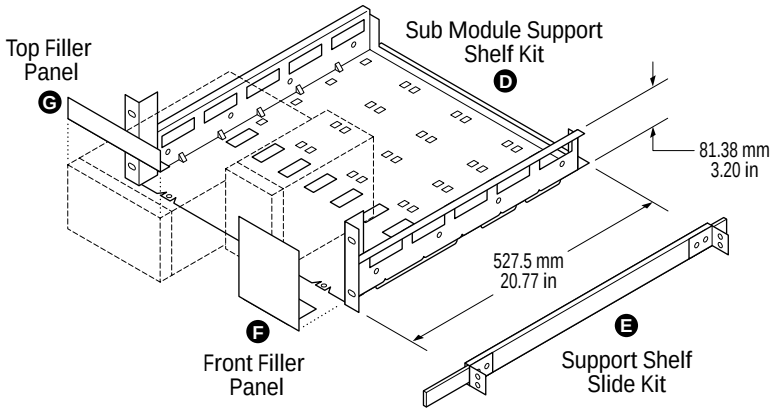

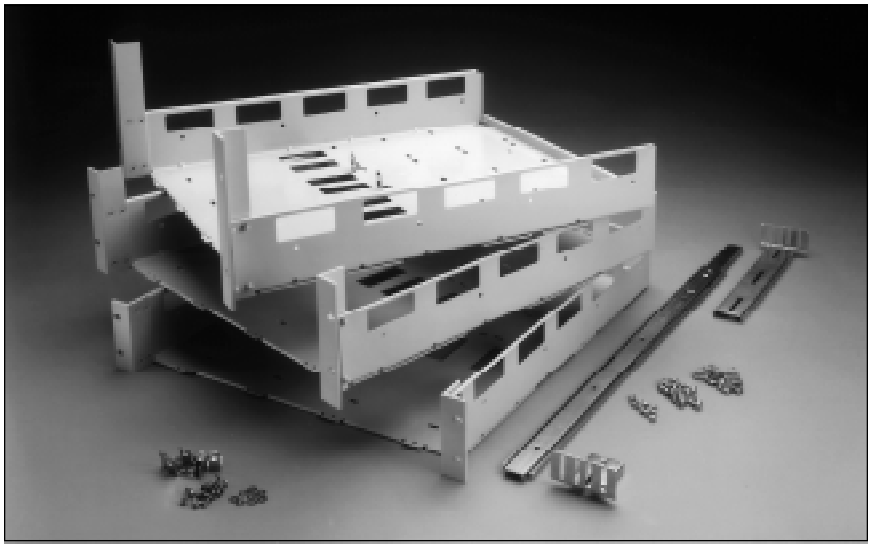

Support Shelves with Slide Rails

Support Shelf Part Numbers

Instrument Module Height	D Support Shelf Part Numbers
Parchment White Color	
88.1 mm (3 1/2 in)	5062-3996
132.6 mm (5 1/4 in)	5062-3997
177.0 mm (7 in)	5062-3998
Quartz Gray Color	
88.1 mm (3 1/2 in)	5063-9255
132.6 mm (5 1/4 in)	5063-9256
177.0 mm (7 in)	5063-9257
Replacement Part	
Tie down clip	1600-1424

Slide Kit Part Number

Instrument Module Height	E Slide Kit Part Number
All module heights	1494-0015
Required for installation of the support shelf.	

Support Shelf Filler Panel Part Numbers

	Description	Size	Part Number	
			Parchment White	**Quartz Gray**
F	For 88.1 mm (3 1/2 in) H support shelf partially filled with instruments, and having the following front panel space to fill:	1/2 MW to fill	5062-4022	5002-3999
F	For 132.6 mm (5 1/4 in) H support shelf, and having the following front panel space to fill:	1/4 MW to fill	5062-4024	5002-4001
G	For 1/2 MW and having the following vertical space to fill:	43.2 mm (1 3/4 in) H	5062-4037	

Lock Link Kits

All submodule cabinets of **equal depths** can be linked together vertically or side-by-side with hardware in the lock link kit. Cabinet frames are already pre-threaded to allow quick assembly.

For side-by-side connections, the kit contains 12 front hooks and 6 rear links, enough for 3 side-by-side joints.

For vertical connections, the kit also contains 4 front hooks and 4 rear links, enough for 2 over/under joints. Kit includes metric screws (order p/n 5062-4078: Inch screw kit if needed.)

The Lock Link Kit is not recommended for full module vertical combinations. Use Kit 5062-3999 Locking Feet Kit to handle those larger weights.

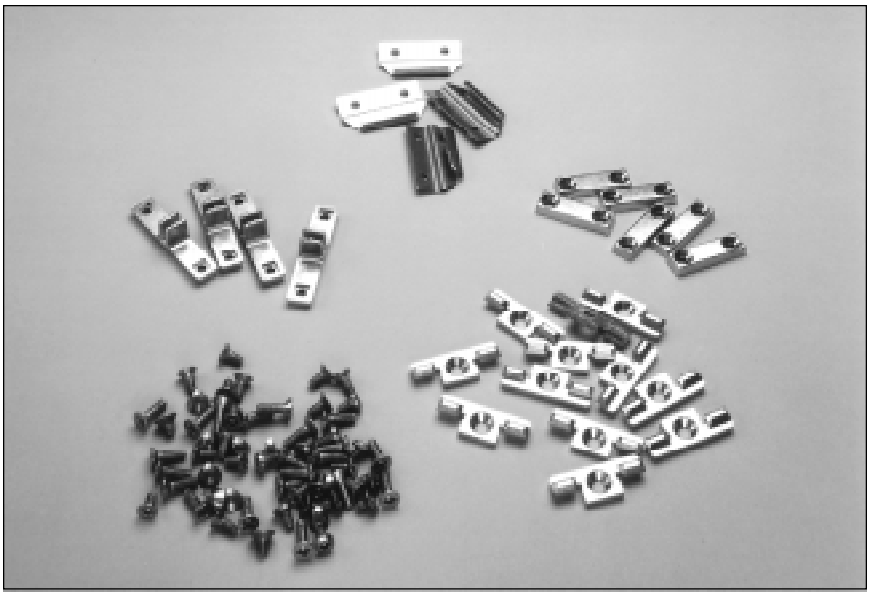

Lock Link Kit

Lock Link Kit Part Number

Instrument Module Height	Lock Link Kit Part Number
All module heights	5061-9694

Additional Part Numbers

Description	Part Number
Inch Screw Kit	5062-4078
Locking Feet Kit	5062-3999

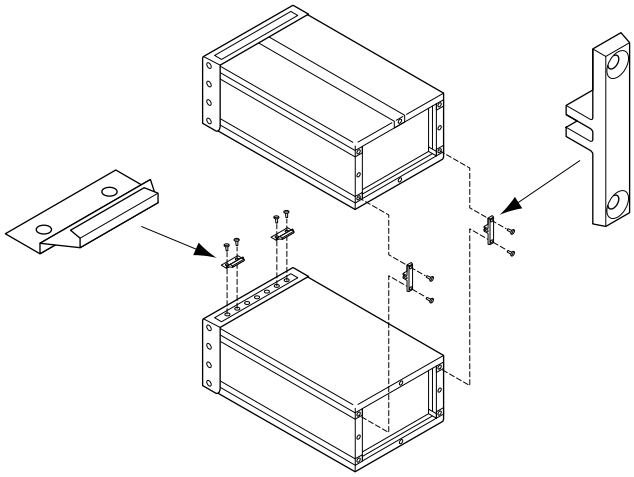

Vertical Connection

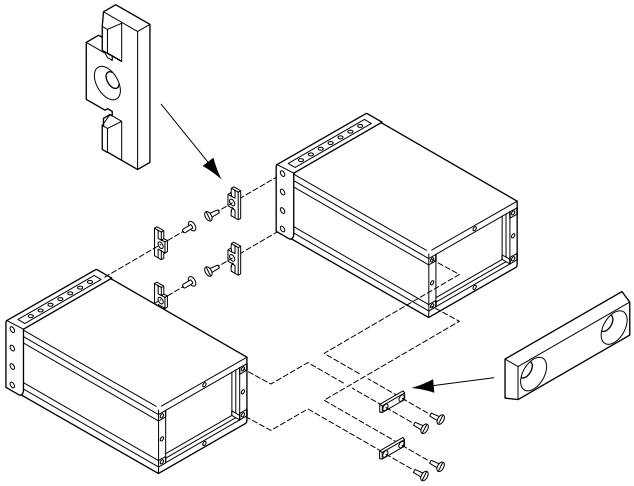

Side-by-side Connection

Rail Kits

HP offers a variety of rail kits to meet instrument and controller rack mounting requirements.

Mounting an instrument with only an instrument rackmount kit and without rails or slides to support the back of the instrument is not recommended. Instrument rackmount kits are not designed to support the full weight of most instruments and may deform or break.

Proper rail selection is important to maximize the use of all EIA units in a rack and to assure proper fit vertically between instrument front panels. Other racks address this problem by offering support rails that can be continuously adjusted vertically within the rack. While this offers infinite adjustability, it can increase installation time.

Hewlett-Packard offers a set of support rails that can cut in half the time required to install equipment in a rack. The rails hang on discrete slots on the vertical mounting columns, corresponding to each EIA unit in the rack. Vertical adjustment between instruments is minimized by selecting the proper rail. The system was specifically designed to minimize the time required to install HP instrumentation and computers, and can be used with other equipment.

See page 34 for detailed descriptions.

Rail Kit Product Numbers

Rail Kit Product No.	Description
E3663A	System II Rail Kit
E3664A	3rd Party Rail Kit
E3665A	VXI Rail Kit
C2788B	Computer Rail Kit

- Rail kit weight rating is 113 kg (250 lbs).
- Two rails are in each kit.
- Kits include all mounting hardware.

Rail Types

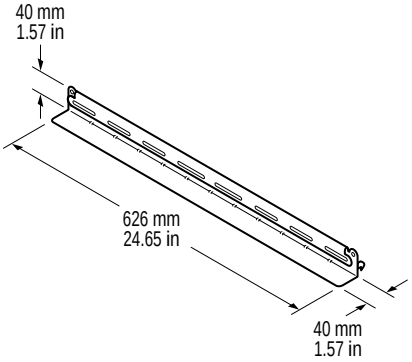

E3663A System II Rail Kit

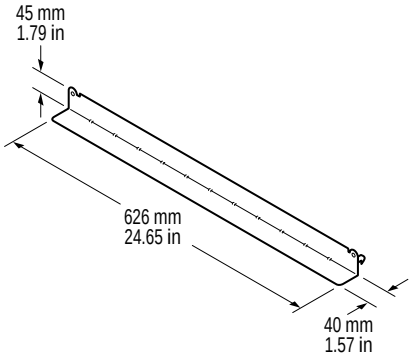

E3664A 3rd Party Rail Kit

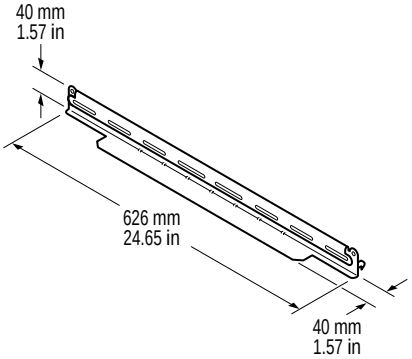

E3665A VXI Rail Kit

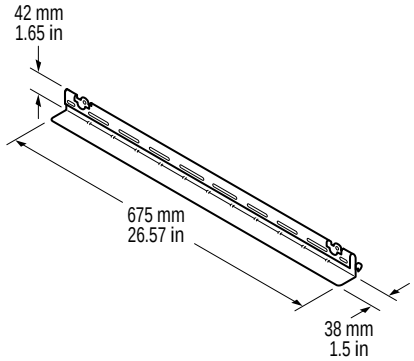

C2788B Computer Rail Kit

Slide Kits

HP supplies a variety of support rails and slide mounts for mounting instruments in a rack. Support rails are most commonly used, but slide mounts are also available for instruments that need to be extended easily from the rack.

Rack slides are available for full width System II cabinets to permit easy access to internal spaces. Each kit consists of two slides that mount directly to System II cabinet slide handle recess spaces (after removing the side handles). The slides also mount directly to vertical support columns in HP racks.

- Non-tilting standard-duty slides carry 38.6 kg (85 lb) maximum load.
- Non-tilting heavy-duty slides carry 79.3 kg (175 lb) maximum load.
- Slide kits are compatible with inch and metric instruments.

End Brackets

For *non-HP* racks, end-bracket kits are available for both HP standard- and heavy-duty slide kits. Slotted hole arrays in the brackets provide for front-to-back rack column spacing of up to a maximum of 609.45 mm (24 in) for standard slides and 688.9 mm (27.12 in) for the heavy-duty slides.

These general purpose mounting brackets fit most common non-HP racks that have L or U shaped columns with EIA standard hole patterns.

Slide Kit and End Bracket Part Numbers

Type	Description	Part Number
Slide Kit: Non-tilting, Standard-duty	Fits 345.4 D and 421.6 D Fits 497.8 D and 574.0 D	1494-0060 1494-0059
Slide Kit: Non-tilting, Heavy-duty	Fits 345.4 D and 421.6 D	1494-0058
Non-HP Racks End Brackets: Standard-duty	Quantity: 4	1494-0061
Non-HP Racks End Brackets: Heavy-duty	Quantity: 4	1494-0064

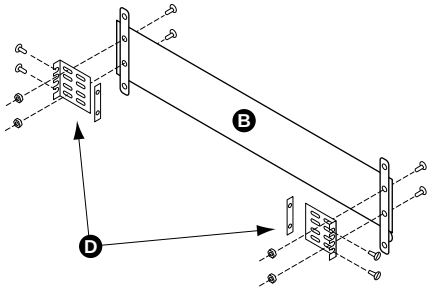

Heavy-Duty Slide Kit B and Non-HP Rack Heavy-Duty Slide Bracket Kit D

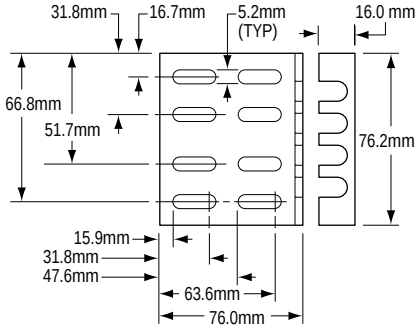

Non-HP Heavy-Duty Slide Bracket Dimensions

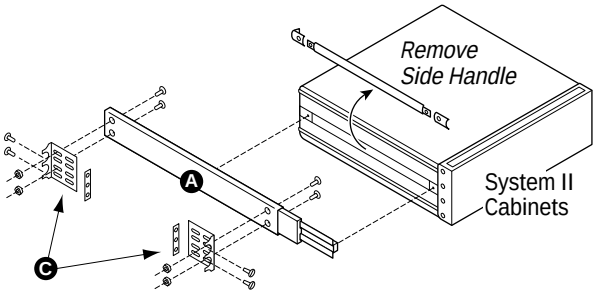

Slide Kit A and Standard Slide Bracket Kit C

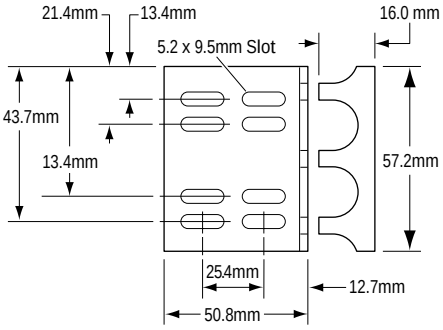

Standard Slide Bracket Dimensions

Drawers

Keep manuals or spare cables close to where they are needed. Two drawer sizes are available.

- Sliding rails and mounting hardware are included.
- Parchment white color.

Drawer Product Numbers	Height Dimensions	EIA Units
35181C	89 mm (3.5 in)	2
35181G	133 mm (5.25 in)	3

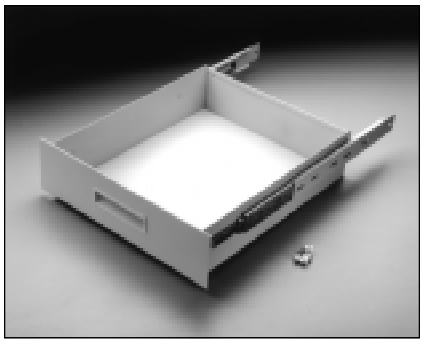

35181G Drawer

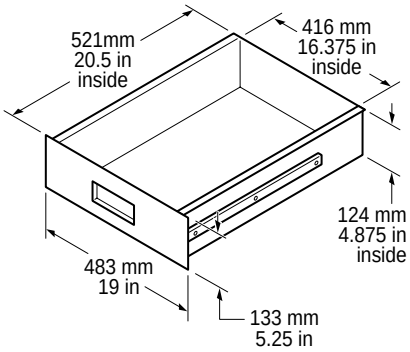

35181G Drawer

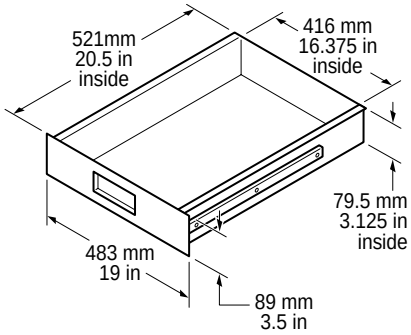

35181C Drawer

Plain Shelf

Product Number: **E3666A**
- Not painted

Product Number: **J1520A**
- Quartz gray

This light-duty fixed shelf is designed to give you a flat surface for placing products in your HP rack cabinet. Shelf is mounted securely into place using the supplied hardware and is designed to sit at the bottom of the EIA increment.

- The shelf weighs 8 kg (17.6 lbs).
- Vertical space required: 44 mm (1.73 in)
- It mounts devices measuring up to 444 mm wide by 678 mm deep (17.5 x 26.7 in).
- It can support up to 45 kg (100 lbs).

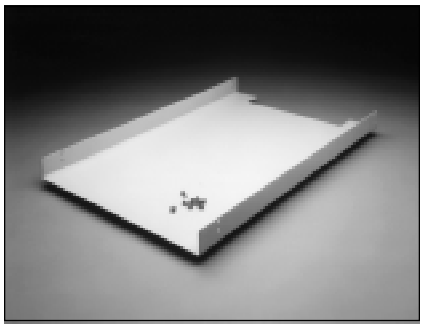

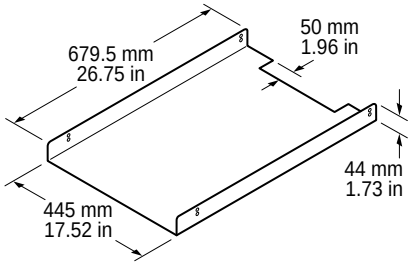

Work Surface

Product Number: **46298N**
The work surface is stationary and is designed to remain securely in place.

- The depth is adjustable from 387 mm (15.24 in) to 550 mm (21.5 in).
- Load capacity: 22.7 kg (50 lbs).
- Includes mounting hardware.

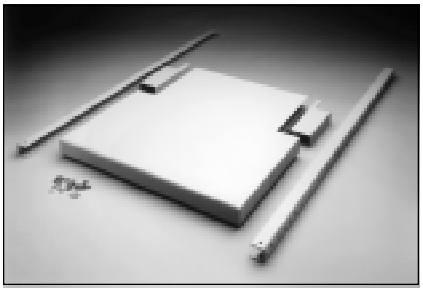

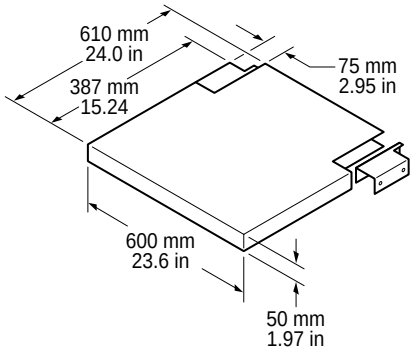

Rack Filler Panels

Spaces on the front face of the HP rack cabinet can be filled with these metal panels.

- Each panel is 19 inches wide.
- Includes mounting hardware.

Filler Panel Part Numbers

Parchment White	Quartz Gray	EIA Units
40101A	E7731A	1
40102A	E7732A	2
40103A	E7733A	3
40104A	E7734A	4
40105A	E7735A	5
40106A	E7736A	6
40107A	E7737A	7

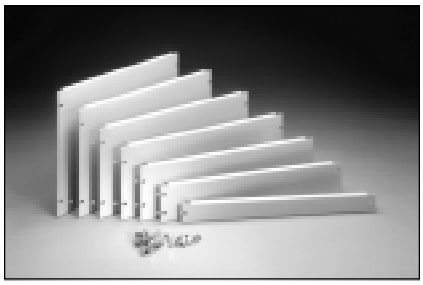

Feedthrough Panels

For use when cables or probes need to pass through from inside the rack to the front.

Product Number: **E3668A**
- Feedthrough panel is 44 mm (1.74 in) high with two cutout grooves.
- Includes mounting hardware.

Product Number: **E3669A**
- BNC-BNC (f) to (f) Panel 44 mm (1.74 in) high with ten floating, isolated connectors.
- Includes mounting hardware.

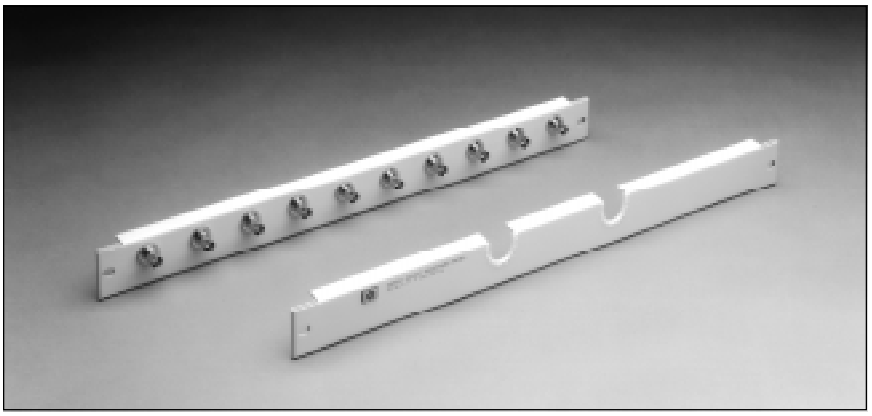

Mounting Hardware

Rackmount kits include all required hardware, however replacement hardware may be needed. This product includes 50 clip-on sheet metal nuts and 50 10-32 decorative screws.

Product Number: **46298R**
- Screws are Parchment white

Product Number: **E7797A**
- Screws are Quartz gray

To order separate parts —
- Clip-on sheet metal nuts: 0590-0804
- 10-32 parchment white screws: 0570-1366

IEC-320 Female-Male Power Cables

Most HP products are shipped with detachable power cords with a localized male plug on one end and an IEC-320 female connector to plug into the instrument. Substitute the regular power cord with one of the following to connect your HP instrument/ controller to the IEC-320 versions of our PDUs.

Power Cable Part Numbers	Length
8120-1575	762 mm (30 in) gray
8120-1860	1524 mm (60 in) black

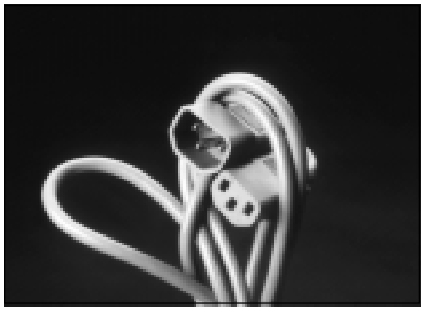

HP Testmobile carts saves you time and money by adding mobility and protection to test instruments and systems. Ergonomic cart and accessories design makes test equipment accessible to the operator, whether seated or standing at the test area.

Competitively priced HP testmobile carts are offered in three cart capacities to provide optimum instrument test configuration:
- scope cart, 59 kg (130 lb)
- instrument cart, 159 kg (350 lb); and
- system cart, 227 kg (500 lb).

A variety of easy-to-mount accessories are available for customized solutions.

Add Mobility to Your Instruments

HP Testmobile carts provide convenient mobility of test equipment, PCs, or workstations to make them readily available when needed, and effectively extend the amount of lab bench space available. Mar-resistant, heavy-duty 5-inch hard rubber casters make moving instruments easy. All casters swivel, which lets the cart move right up to the workbench.

Bring the Equipment to the Test

Rather than bringing the test to the equipment, HP Testmobile carts bring the equipment to the test, to save time and get right to the task. Testmobile carts provide a convenient way to move everything from a small oscilloscope to a complete test system to the work to be tested.

Share Expensive Instruments

HP Testmobile carts allow several operators in a work group to cost-effectively share expensive equipment. In the case of a small test system, all instruments can be conveniently combined in one place through the sufficient space, load capacity, and rackmount capability of the testmobile system cart.

Protect Your Investment

Unlike general-purpose cart design, HP testmobile carts have a nylon strap and steel buckle that secure instruments to the cart, and instrument feet fit securely in slots in both upper tilt tray and lower fixed tray. Expensive instruments are prevented from sliding or tipping off the cart. Locking brakes on rear wheels provide added safety and convenience.

Use Instruments with Ease

The ergonomically designed tilt tray adjusts 30-plus degrees for viewing and using instruments in comfort whether seated or standing. Lifting and carrying heavy instruments is no longer necessary with the mobility provided by HP testmobile carts.

Enhance Instrument Output

HP Testmobile system and instrument carts can be customized with a range of easy-to-mount accessories that enhance instrument input and output:

- Keyboard holder
- Work surface and antistatic mat that provide a secure work area in front of the instrument
- Plotter/printer stand, which can be set up either 305 mm or 381 mm (12 in or 15 in) high, enables hardcopy output on the spot
- Storage drawer (3.5 inch or 5.25 inch) for a convenient place to store probes, cables, and manuals
- Support shelf/storage drawer cover for the 1181A
- Angle rails for supporting rack mounted instruments
- Multiple outlet power strip with 6-foot cord

Testmobile Cart Selection Criteria

A key criterion for cart selection is instrument depth. For instruments with a depth up to 17 inches, select the HP 1180B testmobile scope cart; up to 20 inches, select the HP 1182A testmobile instrument cart; and instruments up to 25 inches, select the HP 1181A testmobile system cart. Static drag chain supplied on the 1181A and the 1182A.

1180B Testmobile Scope Cart

- Tilt tray load capacity = 29.5 kg (65 lb)
- Total load capacity = 59 kg (130 lb)
- Tilt tray = 457 mm W x 457 mm D (18 in W x 18 in D)

1180B Scope Cart

1181A Testmobile System Cart

- Tilt tray load capacity = 90.7 kg (200 lb)
- Total load capacity = 226.8 kg (500 lb)
- Tilt tray = 559 mm W x 660 mm D (22 in W x 26 in D)
- Rackmount any 19-inch EIA instrument up to 24 inches deep beneath the tilt tray in EIA columns.
- 12 EIA units available for rackmounting.
- Includes one set of 5957-8476 angle rails to support rackmounted instruments.

1181A System Cart

1182A Testmobile Instrument Cart

- Tilt tray load capacity = 68 kg (150 lb)
- Total load capacity = 159 kg (350 lb)
- Tilt tray = 508 mm W x 610 mm D (20 in W x 24 in D)

1182A Instrument Cart

Specifications for HP Testmobile Carts

Product Number Description	1180B Testmobile Scope Cart	1181A Testmobile System Cart	1182A Testmobile Instrument Cart
Capabilities			
Tilt tray load	29.5 kg (65 lb)	90.7 kg (200 lb)	68.0 kg (150 lb)
Total load	59.0 kg (130 lb)	226.8 kg (500 lb)	158.8 kg (350 lb)
Cart net weight	18.1 kg (40 lb)	39.0 kg (86 lb)	25.9 kg (57 lb)
Dimensions			
Tilt tray size [mm (in)]	457 x 457 (18 x 18)	559 x 660 (22 x 26)	508 x 610 (20 x 24)
Height	721 mm (28.4 in)	721 mm (28.4 in)	721 mm (28.4 in)
Width	475 mm (18.7 in)	566 mm (22.3 in)	516 mm (20.3 in)
Depth	508 mm (20.0 in)	737 mm (29.0 in)	686 mm (27.0 in)
Vertical rack space*	n/a	533 mm (21.0 in–12 EIA U)	n/a
Cart Selection Criteria			
Maximum Instrument Depth	432 mm (17.0 in)	635 mm (25.0 in)	508 mm (20.0 in)

*Vertical rack space is reduced the more the tilt tray is angled.

1180B **1181A** **1182A**

Side View

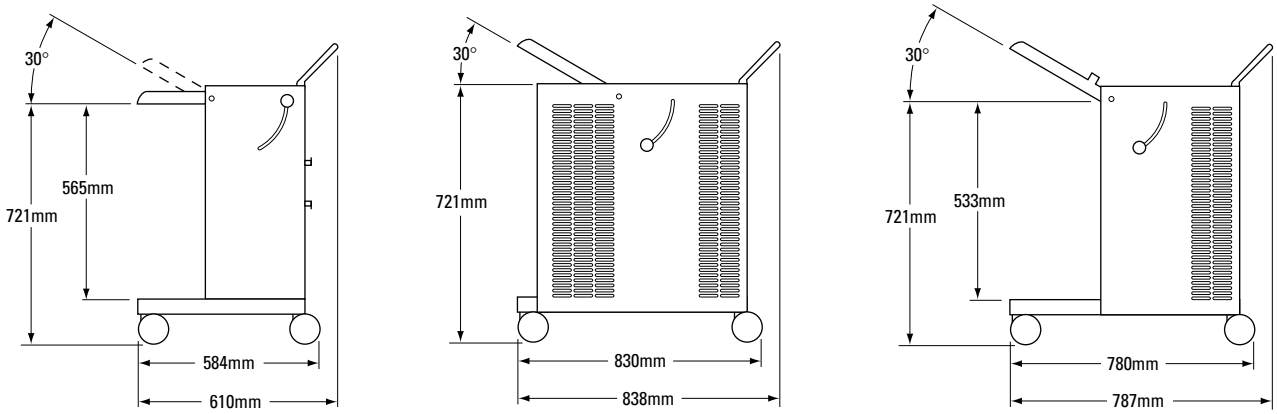

Front View

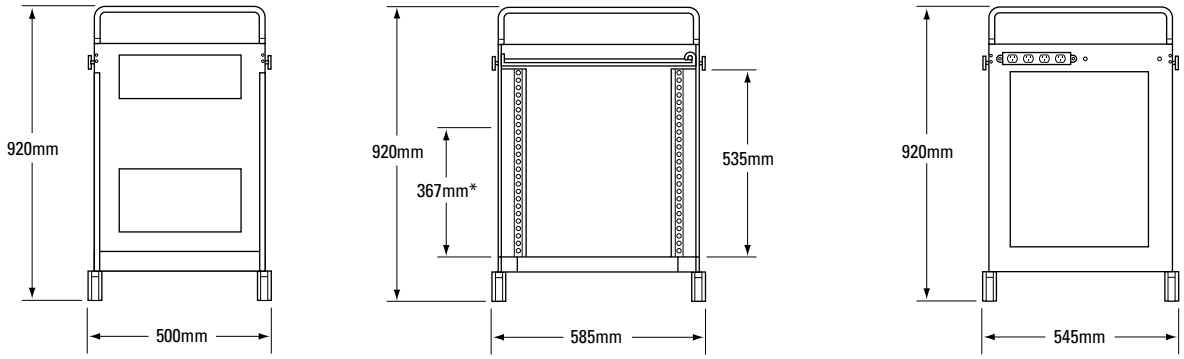

Testmobile Cart accessories

Testmobile Cart Accessories	1180B	1181A	1182A
35181A Printer/Plotter stand	n/a	yes	yes
35181B Keyboard holder	n/a	yes	n/a
35181C 3.5" high Storage drawer	n/a	yes	n/a
35181D Work surface	n/a	yes	yes
35183A Work surface	yes	n/a	n/a
35181E Antistatic mat for 35181D	n/a	yes	yes
35181G 5.25" high Storage drawer	n/a	yes	n/a
35182A Support Shelf & 3.5" H drawer	n/a	n/a	yes
35182B Support Shelf & 5.25" H drawer	n/a	n/a	yes
Power Strips			
92199B Power strip (5 receptacles) U.S	yes	yes	yes
92199E Power strip (4 receptacles) IEC-320	yes	yes	yes
Cables for 92199E Power strip			
8120-1575 Cable, 762 mm (30 in)			
8120-1860 Cable, 1.5 m (60 in)			
Replacement Plug for Cables			
5181-8707 IEC-320 Male Power Cable Replacement Plug			
Replacement Parts			
Tie-down Assembly Strap for 1180B	1530-2054		
Tie-down Assembly Strap for 1181A and 1182A	1530-2228		

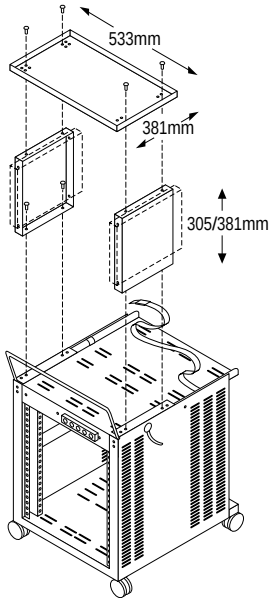

35181A Printer/Plotter Stand

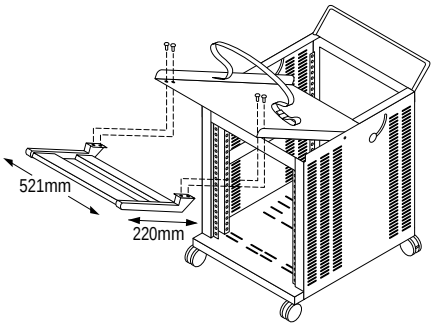

35181B Keyboard Holder

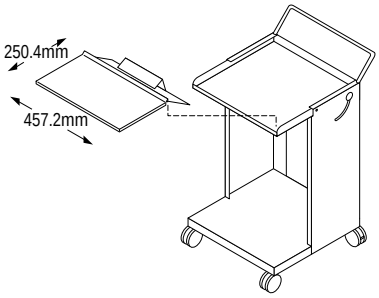

35183A Work Surface

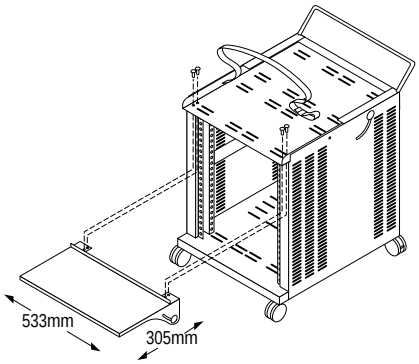

35181D Work Surface

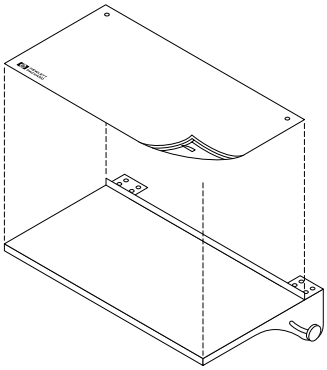

35181E Anitstatic Mat

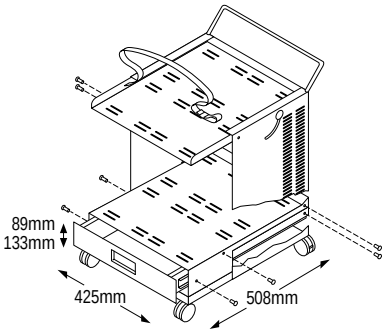

35182A Shelf & 3.5" High Drawer
35182B Shelf & 5.25" High Drawer

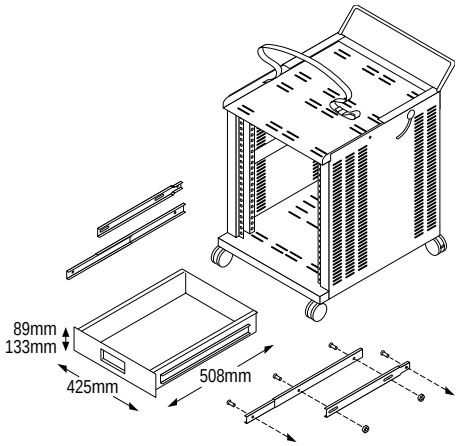

35181C 3.5" High Storage Drawer
35181G 5.25" High Storage Drawer

System Integration Services

Hewlett-Packard offers system integration services to economically install and cable HP equipment in new HP system racks. Save precious development time by letting HP handle finding rack parts, cooling design, cable design, cable fabrication and installation, system test, and aesthetics.

Receive Your Equipment Racked and Ready to Use

Drawing on years of system design experience, HP will design the rack layout, install the equipment, and cable it to the interface panel. System self-test, hardware fixtures and software can be included, and all ergonomic, safety, power distribution, cooling, and cabling issues will be considered. System hardware will arrive installed in racks, cabled, and ready for software development.

Rack Design Service*

Every HP System Integration Service quotation contains rack design as a standard part. It includes rack part and accessory selection, cable routing analysis, plus ergonomic, cooling, safety, and aesthetic design.

Parts Selection

Selecting the proper rackmount kits and hardware for rackmounting equipment can be tedious and time consuming. HP will select the right rack parts for the system, freeing your time for more important tasks.

Cooling Design

System instrumentation and computers are a considerable investment and should be protected from measurement degradation or even damage due to overheating. HP will select the proper ventilation accessories to adequately cool the equipment.

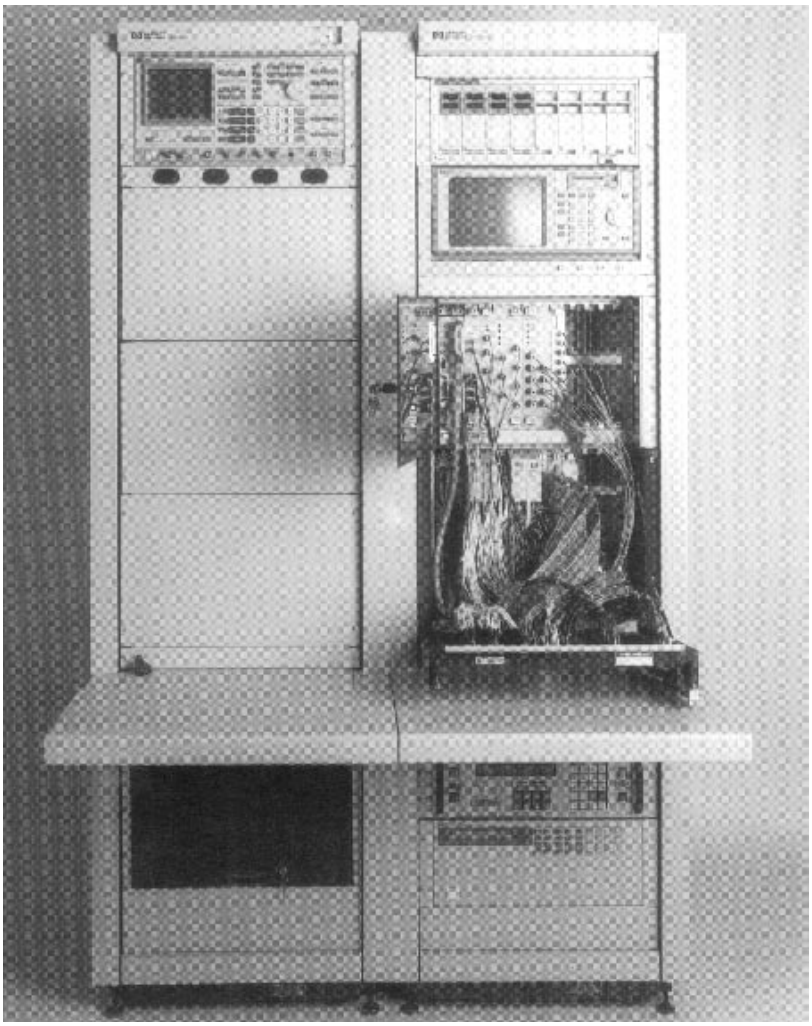

Safety Design

When many pieces of equipment are racked into a system, it is easy to violate good safety practices and safety regulations. For example, rack tipping (when being moved or if protruding surfaces are sat upon) is a common problem that can be hazardous to both personnel and equipment. Combining instruments into a rack with one power cord can exceed local regulations for ground cord leakage currents and result in a potential shock hazard, should the grounding fail or be defeated. Temperature hot spots near power supplies and other components can also present a hazard.

HP's System Integration Service considers all these safety concerns. The completed system is tested, and equipment is rearranged or ballasts are added to ensure a system is safe from common tipping hazards. Leakage currents are calculated or tested. Additional power distribution units are added, if necessary. Any temperature hot spots that HP considers a potential hazard are locally cooled, shielded, or eliminated. Having HP design your rack helps you create a safe work environment.

Cable Routing and Interface Panels

Efficient cable routing is an important system consideration. When supplied with your equipment connection diagram, HP will determine the most efficient routing of cables, supply a rack layout design, and select or design feedthrough panels and interconnect panels that will make cabling of the system fast, clean, and easy.

Ergonomic and Aesthetic Design

An efficient work environment is important for operators in both standing or seated positions. To achieve this, special placement consideration is required for computer monitors, instruments with displays, work surfaces, keyboards, printers, and UUT fixtures. HP's System Integration Service considers these and other ergonomic factors in the placement of all your equipment.

Workplace appearance is especially important during customer visits to the system area. HP keyboard, printer, and storage drawers allow you to close your system and secure peripherals and system access. Coordinated rack kits, custom feedthrough panels, and cable routing provisions give your system a clean, unified, state-of-the-art appearance.

Design Reviews

Before HP finalizes a system design, rack layout diagrams and final configuration and ordering information are submitted for your review. HP wants to be certain that our system design meets your expectations before you order and take delivery of your system.

Racks, Equipment Installation, and Cabling Service

Using your finalized HP system design as the plan, HP will consolidate your purchased HP, third-party, and customer supplied equipment at HP's central integration location. There the equipment will be carefully installed into quality HP racks. All miscellaneous rackmount parts, HP-IB cables and computer interface cables are supplied by a central location as an added convenience. If the order specifies signal cabling or system self-test, HP will develop cable and self-test diagrams and drawings for your review before cable fabrication, coding, and installation begins.

Once the equipment has been installed in the racks, the HP-IB, RS-232, SCSI, and power cables are connected and tied down securely. Signal cabling, if ordered, is fabricated, installed, and tested. A power-up communications test is then performed between the computer, peripherals, and test equipment. The full instrument and peripheral address map is recorded, and a printout is shipped with the system for future programming convenience.

The system is packaged on heavy-duty pallets and shipped padded-van or international air freight to the customer site or to a designated third-party for further integration or software development.

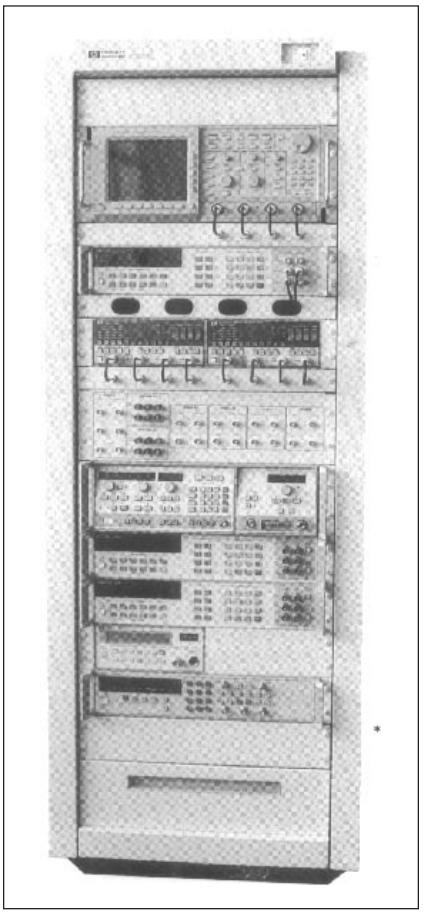

Receive Your Next Order "As a System"

Focus your attention on the development areas where your expertise and knowledge are most needed. Let HP handle the rack design, equipment installation, and cabling for you. Contact your HP Field Engineer for more information about this economical service.

Ordering Information

HP Z2006A – Rack Design and Integration Service

*HP Rack Design Service is offered only as a part of the HP System Integration Service.

System Integration Guidelines

EIA Standard

Specifications for 19-inch racks are governed by the Electronic Industries Association (EIA) standard RS-310-D. HP racks fully comply with this standard.

Vertical space within a rack is measured in modular "units," where each unit is defined as 44.5 mm (1.75 in) high. Equipment height is often specified in EIA units. EIA also specifies that no equipment be wider than 450 mm (17.720 in) in order to provide necessary clearance between the vertical mounting columns. The adjacent diagram shows the HP vertical mounting column, which incorporates the EIA hole spacing required on the front of the cabinet. These HP racks repeat the EIA holes on the side of each column, and the hole centerlines are aligned with the holes on the front of the column.

Support Rail Selection

HP supplies a variety of support rails and slide mounts for mounting instruments in a rack. Support rails are most commonly used, but slide mounts are also available for instruments that need to be extended easily from a rack. For a complete list of slide mounts, refer to the Instrument Rackmount Kits section.

Mounting an instrument with only a rackmount kit and without rails or slides to support the back of the instrument is not recommended. Rackmount kits are not designed to support the full weight of most instruments and may deform or break. Proper rail selection is important to maximize the use of all EIA units in a rack and to assure proper fit vertically between instrument front panels. Other racks address this problem by offering support rails that can be continuously adjusted vertically within the rack. While this offers infinite adjustability, it can increase installation time.

Hewlett-Packard offers a set of support rails that can cut in half the time required to install equipment in a rack. The rails hang on discrete slots on the vertical mounting columns, corresponding to each EIA unit in the rack. Vertical adjustment between instruments is minimized by selecting the proper rail. The system was specifically designed to minimize the time required to install HP instrumentation and computers, and can be used with other equipment.

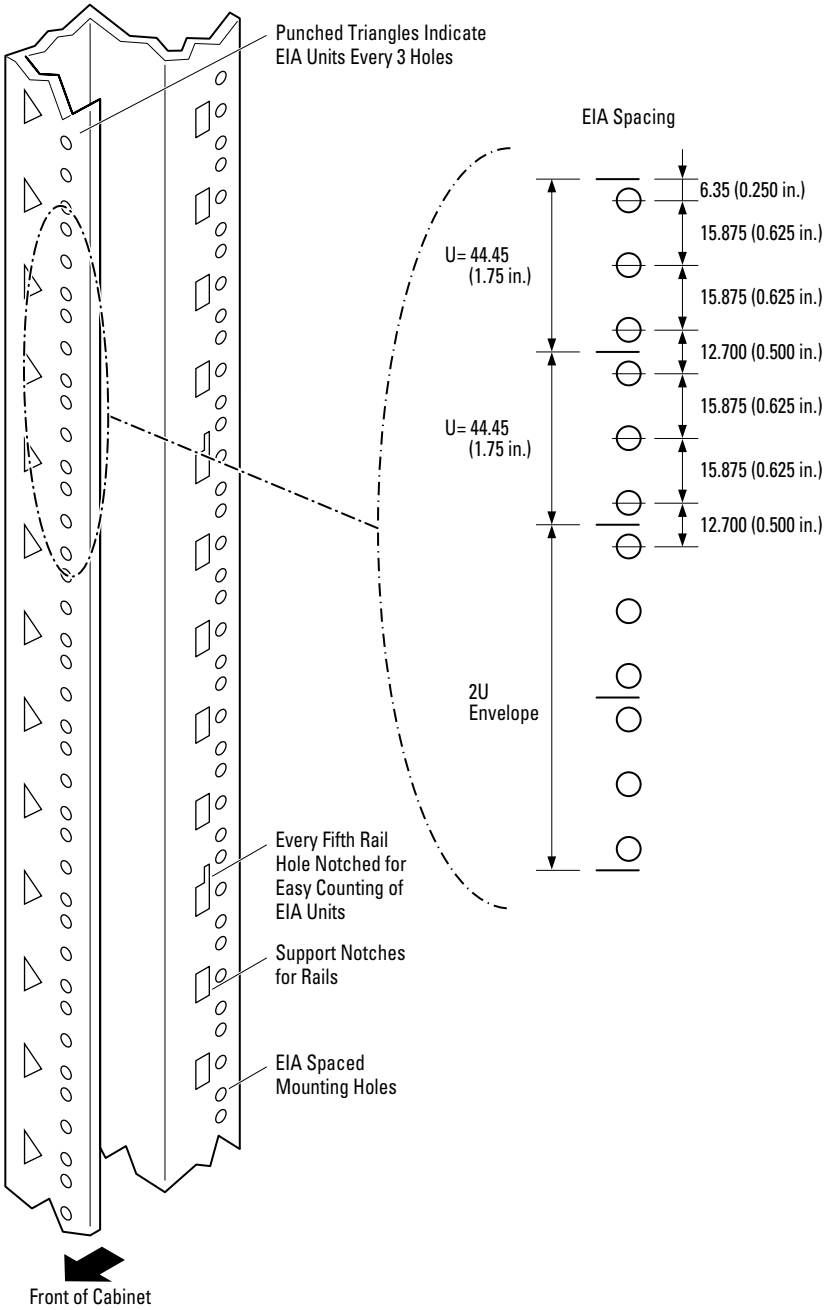

The dimensions of each rail and how it relates to the EIA envelope are below:

- The **E3663A** System II rail is designed to accommodate HP System II instruments, which have a frame around the front of the instrument that protrudes approximately 5 mm (.20 in). This rail raises the instrument so that the bottom of the frame aligns with the base of the EIA envelope.
- The **E3664A** Third Party rail is designed for instruments that are completely flat along the bottom and aligns these instruments with the base of the EIA envelope.
- The **E3665A** VXI rail is similar to the System II rail, except that the flanges are trimmed to accommodate HP VXI mainframes. This rail is also useful for mounting the top instrument in a tall rack, since it allows the equipment to be slid onto the rails at an angle from below.
- The **12679B** Support rail has the same EIA base envelope as the E3663A and the E3664A. It mounts only with screws, and has no hanging hooks. It also has more mounting clearance for wide instruments, and it can be used to mount HP instruments in non-HP racks.
- The **C2788B** Computer rail is used to mount many HP computer peripherals.

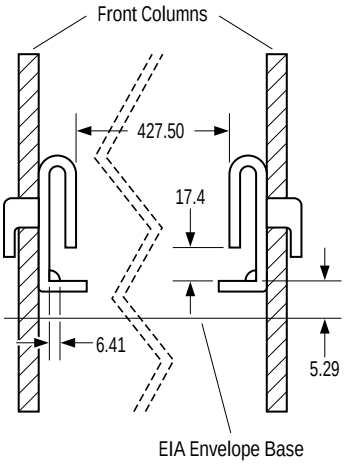

E3663A System II Rail Kit
E3665A VXI Rail Kit

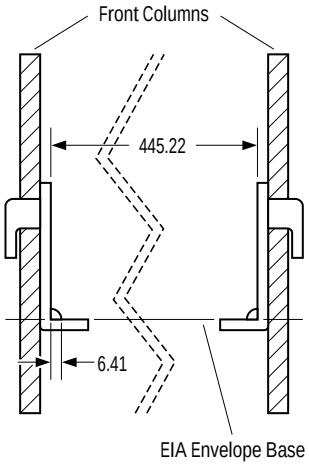

E3664A 3rd Party Rail Kit

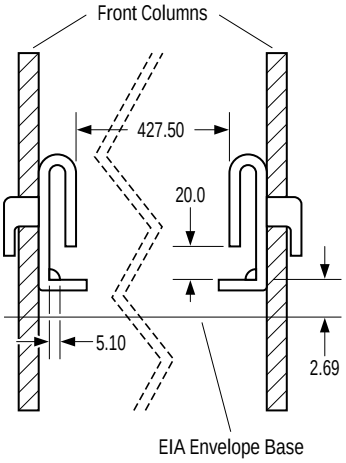

C2788B Computer Rail Kit

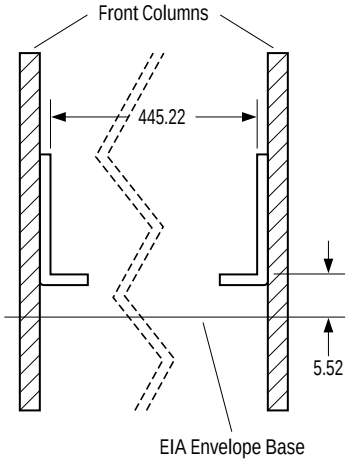

12679B Support Rail Kit

Instrument Racking Order

When integrating systems, begin at the bottom of the rack and work up, to keep the center of gravity low. Keep the anti-tip foot extended, as recommended in the User's Manual, to provide maximum stability when installing equipment. Heaviest products should always be mounted in the bottom of the rack. If you plan to use rack slides and extend instruments from the rack, you may also want to order one or more C2790A ballasts. The ballasts act as a counterweight, and are mounted at the base of the rear columns of the rack.

Instrument Placement

As a general rule, place above the work surface instruments that need to be viewed, and place instruments that are not viewed often (for example, power supplies) in the bottom of the rack. Instruments viewed frequently (often those with a CRT) should be placed at eye level. Base this level upon whether the test station is designed for a standing or seated operator.

When possible, avoid putting computer displays and instruments with CRTs in the very top of the rack, as residual magnetism in the rack can distort the display. Computer displays can also be easily viewed when placed on top of the E3660A 1.1 m and the E3905A 1.3 m racks.

Accessories such as the 46298N work surface and E4079A and E3900A Keyboard Rackmount Kits are usually placed at bench height, approximately 29 to 32 inches above the floor, for seated operators. For standing operators, place the work surface below CRTs and all instrument displays that are read frequently.

Occasionally there is a need to route cables from inside the rack to the instrument front panels. Typically, this is accomplished by leaving space in the rack for a feedthrough or filler panel. Cables can also be routed into the back of the rack using the 100 mm gap between the bottom of the back door and the rack frame.

Cooling Guidelines

This section is intended to help you select a cooling method for your racked system. Hewlett-Packard offers choices of cooling methods; natural convection and top-mounted extractor fans. The HP racks in this catalog were designed for efficient cooling. A rear door enhances airflow when natural convection cooling or an extractor fan is used.

Cooling and Air Flow

For maximum cooling and optimum rack thermal efficiency, place products with greatest power output toward the top of the racked components. (Do not, however, violate the guideline that heaviest components should be placed at the bottom of the rack.) This promotes efficient cooling, since heat rises as it is generated by the components. When placed close to the top, high power components will not unnecessarily heat other components.

To promote upward air flow, place the deepest components near the bottom of the rack with less deep components above them. Uninterrupted upward air flow prevents recirculation of the air, which would lower cooling efficiency. Recirculated air can also impart unnecessary heat to the components.

A 1 inch vertical space is sometimes left between instruments when it is essential to achieve the best possible cooling, or when there is extra space in the rack. This approach is not required in most installations, but it is essential to leave a 1 inch vertical space between stacked instruments when both instruments vent cooling air from the top and bottom.

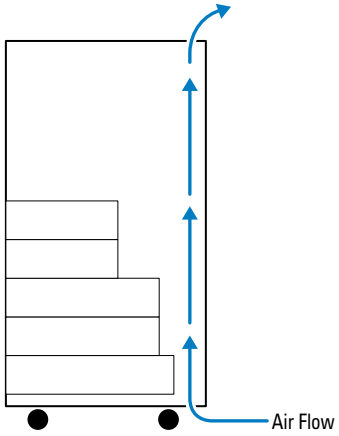

Good

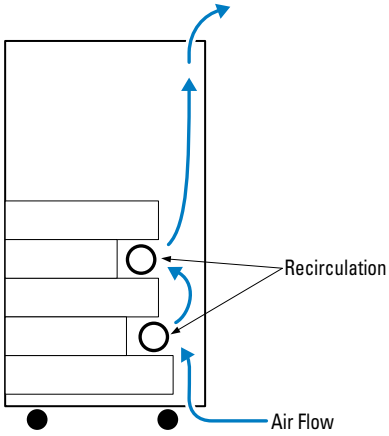

Less Effective

Natural Convection and Conduction Cooling

Convection airflow occurs naturally, whenever heat is generated within the rack. The rack was designed to enhance convection airflow, which is shown in the accompanying diagram. Outside air enters the rack through a 100 mm opening below the rear door and exits primarily through the vented top.

Natural convection cooling can be used when the rack contains few instruments that together consume relatively little power. Some conduction and radiation cooling also occur by heat transfer through the rack's metal top, bottom, side panels, and doors. This cooling is taken into account in the cooling performance diagrams in this section.

Extractor Fan Cooling

The extractor fan enhances natural convection cooling by increasing the airflow in the rack. It uses the same airflow path shown in the diagram for natural convection. Use of the fan enhances the movement of warm air from the bottom of the rack up and out of the rack. When compared to a rack with similar average internal temperature that uses only convection cooling, the extractor fan cooled rack is cooler at the top and bottom.

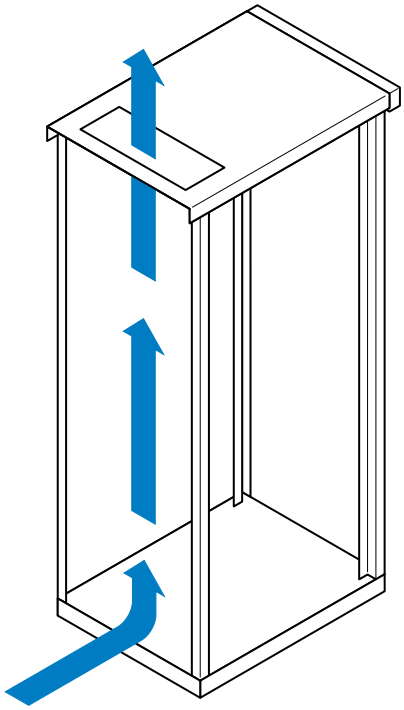

Natural Convection and Extractor Fan Airflow (Rear View of Rack)

Selecting a Cooling Method

The ΔT (temperature rise) of the air within the rack is important when selecting a cooling method, since it's generally accepted that the reliability of electronic equipment decreases as temperature rises. Most electronics manufacturers specify the maximum temperature at which their equipment will operate. If, for example, the maximum operating temperature is 40° C, and the ambient air temperature outside the rack is 25° C, the cooling method chosen must maintain the ΔT within the rack to no more than 15° C.

Power Dissipation

The power dissipated within the rack is also a major factor. This can be determined by adding up the VA ratings of each piece of equipment in the rack. In some cases, such as for power supplies, these figures can be adjusted based upon the actual instrument operating conditions. For example, a 1 kilowatt power supply might have a maximum power consumption specification of 1700 VA. If the unit is sourcing its power to equipment outside of the rack (that is, to a UUT or for burn-in applications), that power can be subtracted from the power dissipated in the rack. In this case, if the unit is supplying 60 volts at 10 amps, 600 VA can be subtracted from that instrument's power consumption of 1700 VA, for a net dissipation in the rack of 1100 VA.

Other Factors

Other considerations when selecting a cooling method include a fan's power, size, and noise specifications.

Cooling Performance

Knowing the power dissipation in the rack and the ΔT that can be tolerated allows you to use the cooling performance charts in this section to determine the optimal cooling method for your application.

The following charts show the amount of cooling available from natural convection for each rack. Use the power dissipated by your equipment in the rack, the maximum allowed temperature rise (ΔT), and other factors to select a cooling method tailored to your application needs.

E3660A 1.1 m Rack Cooling Performance

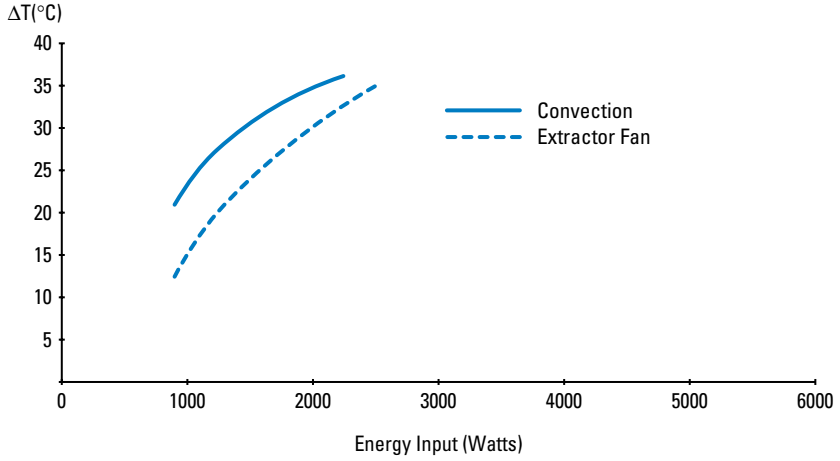

E3905A 1.3 m Rack Cooling Performance

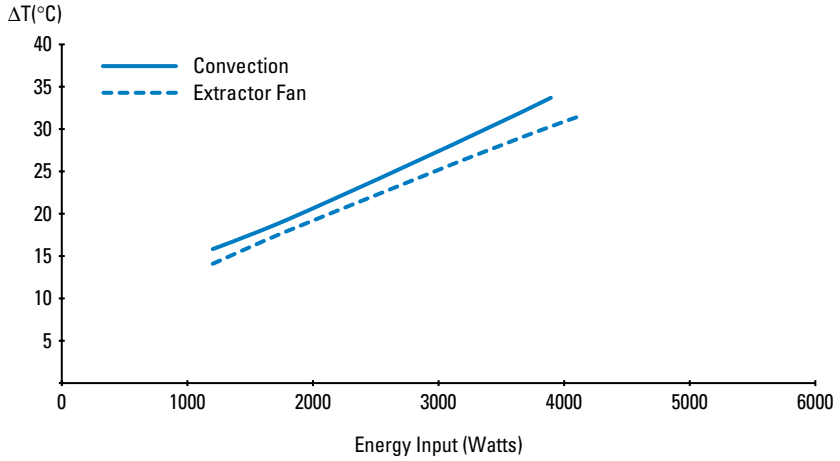

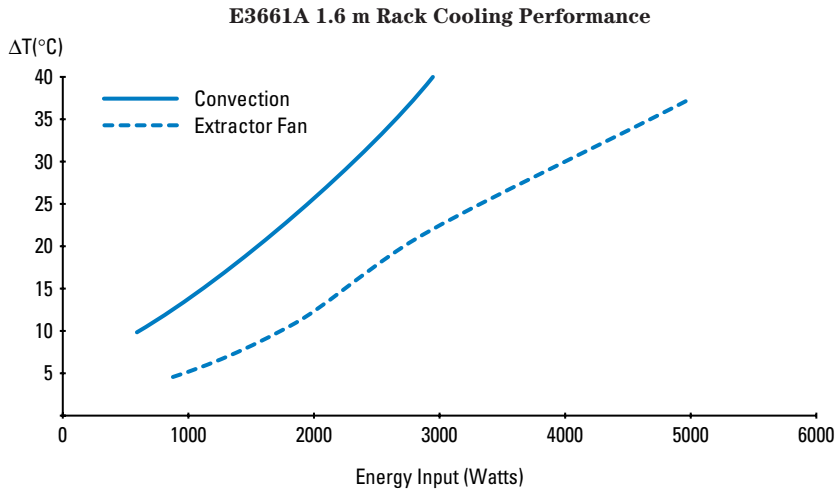

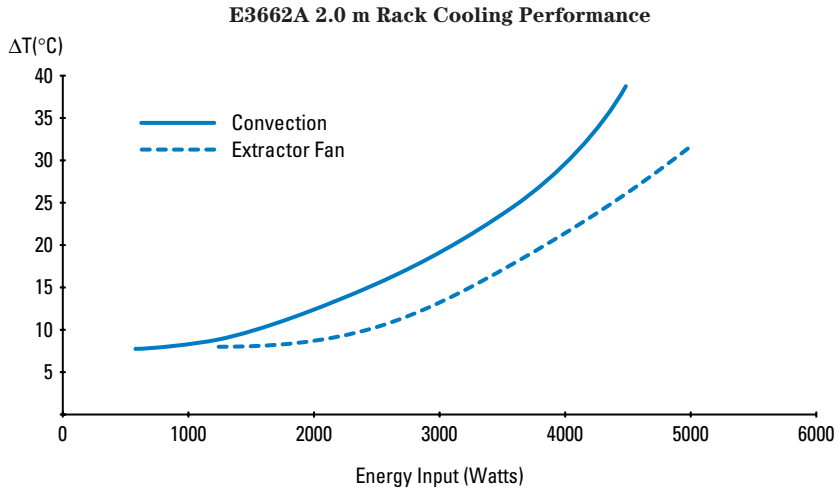

Cooling Calculation Example

- Ambient temperature outside of rack: 25° C (79° F)
- Maximum equipment temperature: 40° C (104° F)
- Maximum ΔT (temperature rise) allowed: 40° C – 25° C = 15° C

Assume that the totals are as follows:

Equipment Model Number & Description		EIA Height	Depth	Weight	Power	Air Venting
	Total	39		800	2700	

Since 39 units of vertical instrument height are required, select the E3662A rack, which has 41 units of mounting space. Total power dissipated in the rack is 2700 VA. Go to the performance chart for the E3662A, and find 2700 watts on the X-axis. Draw a horizontal line on the chart that intercepts 15° C on the y-axis.

The chart shows that, in this case, the extractor fan will provide adequate cooling, but that natural convection cooling does not provide the level of cooling required in this example.

Integrated Rack Stability Worksheets

To reduce the risk of rack instability, it may be necessary to install one or more C2790A ballast kits. Each C2790A ballast kit contains a 30 lb. ballast and mounting hardware. The ballast mounts on the rear columns of the rack and provides a counterweight for equipment and/or peripherals that extend out from the front of the rack.

This section contains two worksheets:

- A worksheet for slide-mounted products
- A worksheet for work surface/ keyboard products

If both types of products are installed in the rack, combine (total) the results from each worksheet to determine the total amount of ballast required.

WARNING

Ballast is not a substitute for the anti-tip stabilizer bar. The anti-tip stabilizer bar can be pulled out from the base at the front of the rack. It is intended to be used temporarily, such as when installing or servicing equipment. The anti-tip stabilizer bar should not be extended during normal operation.

Slide-Mounted Products

To reduce the risk of rack instability when operator serviceable, slide-mounted, products are installed, use the following worksheet to determine the need for additional counterweight. If there are no operator serviceable, slide-mounted products in the rack, you may ignore this worksheet. An operator serviceable, slide-mounted product is defined as a product which can be extended from the rack for servicing without requiring the use of any tool. A product requiring the use of a tool to facilitate servicing or extension of the product is defined to be trained service personnel serviceable only. When these products are extended, the use of the rack stabilizer is required and no counterweight is needed.

Slide-Mounted Product Worksheet

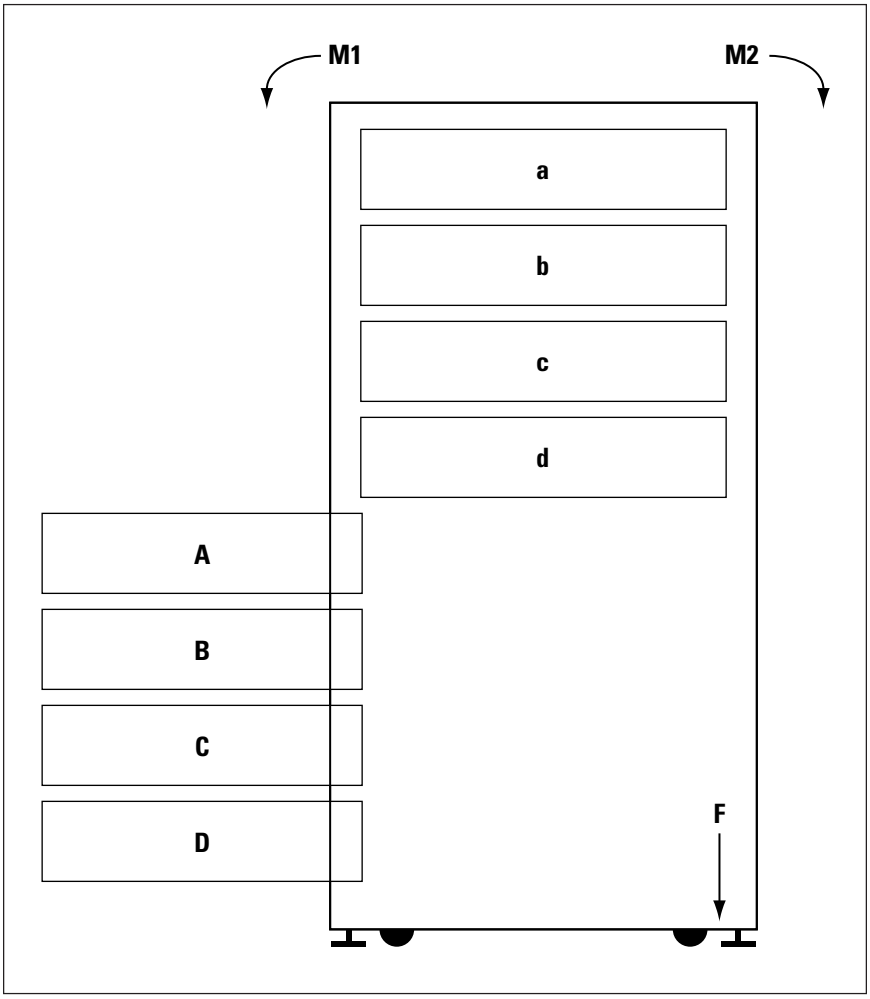

Moment—Slide Mounted Products

Weight of Operator Serviceable Slide Mount Products:

A = _____lbs; B = _____lbs; C = _____lbs; D = _____lbs;…

Weight of all fixed (i.e., non-slide mounted) and Trained Service Personnel Serviceable Slide Mount Products:

a = _____lbs; b = _____lbs; C = _____lbs; d = _____lbs;…

Model	M1†	M2‡
1100 mm	(A + B + C + D +…) *1.25 ft	32.12 ft-lbs + (a + b + c + d +…) *1.00 ft
1300 mm		16.1 ft-lbs + (a + b + c + d +…) *1.00 ft
1600 mm		11.4 ft-lbs + (a + b + c + d +…) *1.00 ft
2000 mm		48.67 ft-lbs + (a + b + c + d +…) *1.00 ft

†M1 = Moment of All Operator Serviceable Slide-Mounted Products.
‡M2 = Moment of All Fixed and Trained Service Personnel Serviceable Slide-Mount Products.

If M1 ≤ M2: No additional counterweight is required.

If M1 > M2: Additional counterweight is required. Use the formulas below to calculate.

$$F = \frac{M1 - M2\ ft\text{-}lbs}{2.05\ ft} = amount\ of\ force\ (lbs)\ @\ 2.05\ ft$$

$$X = \frac{F\ lbs}{30\ lbs} = number\ of\ C2790A\ ballast\ kits\ required$$

You can use the following table in place of the second formula to determine the number of C2790A ballast kits required.

0 ≤ F	No Ballast Required
0 < F ≤ 30	1 C2790A Ballast Kit
30 < F ≤ 60	2 C2790A Ballast Kits
60 < F ≤ 90	3 C2790A Ballast Kits
90 < F ≤ 120	4 C2790A Ballast Kits
120 < F ≤ 150	5 C2790A Ballast Kits
150 < F ≤ 180	6 C2790A Ballast Kits

Work Surface/Keyboard

To reduce the risk of rack instability when using a work surface or a keyboard mounting kit, use the following worksheet to determine the need for additional counterweight. You may ignore this worksheet if there are no work surfaces or keyboard mounting kits installed in the rack.

Work Surface/Keyboard Worksheet

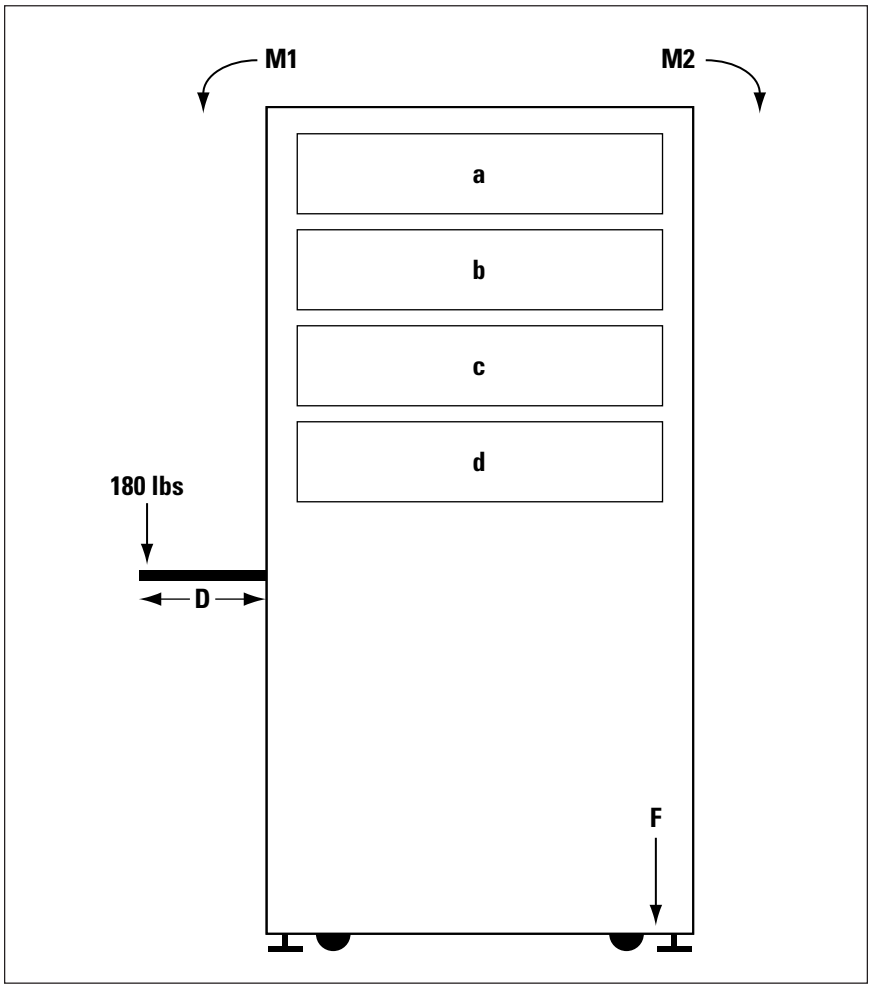

Moment—Keyboard/Work Surface

Weight of Work Surface/Keyboard Products:

D = _____ft

Weight of all fixed (i.e., non-slide mounted) and Trained Service Personnel Serviceable Slide-Mount Products:

a = _____lbs; b = _____lbs; c = _____lbs; d = _____lbs;…

Model	M1†	M2‡
1100 mm	180 lbs * D ft	235.00 ft-lbs + (a + b + c + d + …) *1.00 ft
1300 mm		254 ft-lbs + (a + b + c + d + …) *1.00 ft
1600 mm		281.25 ft-lbs + (a + b + c + d + …) *1.00 ft
2000 mm		320.00 ft-lbs + (a + b + c + d + …) *1.00 ft

†M1 = Moment of rack with 180 lbs of force applied at D ft.
‡M2 = Moment of All Fixed and Trained Service Personnel Serviceable Slide-Mount Products.

If M1 ≤ M2: No additional counterweight is required.

If M1 > M2: Additional counterweight is required. Use the formulas below to calculate.

$$F = \frac{M1 - M2\ ft\text{-}lbs}{2.05\ ft} = amount\ of\ force\ (lbs)\ @\ 2.05\ ft$$

$$X = \frac{F\ lbs}{30\ lbs} = number\ of\ C2790A\ ballast\ kits\ required$$

You can use the following table in place of the second formula to determine the number of C2790A ballast kits required.

0 ≤ F	No Ballast Required
0 < F ≤ 30	1 C2790A Ballast Kit
30 < F ≤ 60	2 C2790A Ballast Kits
60 < F ≤ 90	3 C2790A Ballast Kits
90 < F ≤ 120	4 C2790A Ballast Kits
120 < F ≤ 150	5 C2790A Ballast Kits
150 < F ≤ 180	6 C2790A Ballast Kits

Rack Selection Worksheet

Use the following worksheet to identify the rack size, power distribution units, and cooling needed for your application.

Equipment Model Number & Description	EIA Height	Depth	Weight	Power	Air Venting
Total					

Rack Height

To select a rack,

- Calculate the total number of vertical EIA units required.
- Add extra units for spaces between adjacent instruments that vent air from the top and bottom.

Rack model number	EIA units	Weight
E3660A	21	81 kg (179 lbs)
E3905A	25	89 kg (196 lbs)
E3661A	32	100 kg (221 lbs)
E3662A	41	116 kg (255 lbs)

Weight

Calculate total weight of equipment and rack, and determine that weight does not exceed maximum loading of floor where equipment is to be installed. Do not exceed 816 kg (1800 lbs), which is the maximum rating for a fully loaded rack.

Power

Calculate total power in VA for all instruments, computers, and monitors in the rack. To determine amperage required, divide total VA by the local voltage:

$$\text{Amperage} = \frac{\text{Total Power (VA)}}{\text{Local Voltage}}$$

Select correct number of PDUs, as follows:

- If amperage is less than 16 amps, order one 16 amp PDU.
- If amperage is between 16 and 32 amps, then a second PDU must be ordered.
- If amperage is greater than 32 amperes, you may need to develop a custom power distribution solution tailored to your needs.

Cooling

To calculate cooling requirements, refer to the Cooling Guidelines section of this catalog.

Rack Cabinets

Standard Racks

E3660A	1.1 m Rack Cabinet, Parchment White (21 EIA U)
E3905A	1.3 m Rack Cabinet, Parchment White (25 EIA U)
E7590A	1.3 m Rack Cabinet, Quartz Gray (25 EIA U)
E3661A	1.6 m Rack Cabinet, Parchment White (32 EIA U)
E3662A	2.0 m Rack Cabinet, Parchment White (41 EIA U)

Rack Electrical Order Options

Electrical option includes: Factory installed 1 PDU and 1 PDU installation kit.
Add the option to the Standard Rack product number when ordering. (Electrical order options not available for the E7590A.)

-AW3	100/120V PDU (North America)
-AW5	200/240V PDU (International)

Bare Racks

Bare rack: Rack without side panels or rear door.

E3661A -AXH	1.6 m Bare Rack (32 EIA U)
E3662A -AXH	2.0 m Bare Rack (41 EIA U)

Rack Accessories

Power Distribution Units (PDUs)

For 1.1 m and 1.3 m Racks

E4451A	100/120V PDU (North America)
E4452A	200/240V (North America)
E4453A	200/240V (International)

For 1.6 m and 2.0 m Racks

E4455A	100/120V PDU (North America)
E4456B	200/240V (North America)
E4457B	200/240V (International)

PDU Installation Kits

Not needed for factory-installed PDUs.

E4472A	PDU brackets and forehead bezel replacement, Parchment white
E7685A	PDU brackets and forehead bezel replacement, Quartz gray
E7686A	PDU brackets

Front Doors

Plexiglas is transparent and rim is parchment white.

E4460A	1.1 m Plexiglas Front Door
E4461A	1.3 m Plexiglas Front Door
E4462A	1.6 m Plexiglas Front Door
E4463A	2.0 m Plexiglas Front Door

Rear Doors

Vented Rear Doors

E4477A	1.6 m Vented Rear Door
E4479A	2.0 m Vented Rear Door

Solid Rear Doors

E4476A	1.6 m Solid Rear Door
E4478A	2.0 m Solid Rear Door

Rack Accessories (continued)

Tie Kits

E4466A	1.1 m Tie Kit
E4467A	1.3 m Tie Kit
E4468A	1.6 m Tie Kit
E4469A	2.0 m Tie Kit

Side Panels

E4458A	1.6 m Solid Side Panel
E4459A	2.0 m Solid Side Panel

Extractor Fans

E4470A	100/120V 200 cfm Fan
E4471A	200/240V 200 cfm Fan
E7687A	200/240V 700 cfm Fan

Ballast

C2790A	30 lb. Steel Ballast

Rackmount Kits

Monitor Rackmount Kit

E5922A	Parchment White—Fits 14"–19" Monitors
J1519A	Quartz Gray—Fits 14"–19" Monitors

Keyboard Rackmount Kits

E4079A	Retractable Keyboard, Parchment white
E3900A	Fixed Keyboard, Parchment white
J1518A	Retractable Keyboard, Quartz gray
E7714A	Fixed Keyboard, Quartz gray

Instrument Rackmount Kits

Handles and Rackmount Flanges

Instrument Module Height	Front Handle Kit Part No.	Rackmount Flange Kit Part No.	Rackmount Flange Kit with Handles Part No.	Rackmount Flange Kit for Instr. w/previously supplied handles Part No.
Parchment White Color				
88.1 mm (3 1/2 in)	5062-3988	5062-3974	5062-3975	5062-4069
88.1 mm (3 1/2 in)	—	5062-3976	5062-3982	—
132.6 mm (5 1/4 in)	5062-3989	5062-3977	5062-3983	5062-4071
177.0 mm (7 in)	5062-3990	5062-3978	5062-3984	5062-4072
221.5 mm (8 3/4 in)	5062-3991	5062-3979	5062-3985	5062-4073
265.9 mm (10 1/2 in)	5062-3992	5062-3980	5062-3986	5062-4074
310.4 mm (12 1/4 in)	—	5062-3981	5062-3987	—
Quartz Gray Color				
88.1 mm (3 1/2 in)	5063-9226	5063-9212	5063-9219	5063-9232
88.1 mm (3 1/2 in)	—	5063-9213	—	—
132.6 mm (5 1/4 in)	5063-9227	5063-9214	5063-9221	5063-9234
177.0 mm (7 in)	5063-9228	5063-9215	5063-9222	5063-9235
221.5 mm (8 3/4 in)	5063-9229	5063-9216	5063-9223	5063-9236
265.9 mm (10 1/2 in)	5063-9230	5063-9217	5063-9224	5063-9237
310.4 mm (12 1/4 in)	—	5063-9218	5063-9225	—

Instrument Rackmount Kits (continued)

Rack Adapter Kits

Instrument Module Height	Mounts 1/4 MW Module	Mounts 1/2 MW or 2 each 1/4 MW Modules	Mounts 3/4 MW (3 ea. 1/4 MW) or 1/4 & 1/2 MW side by side
Parchment White Color			
88.1 mm (3 1/2 in)	—	5062-3972	5062-3971
132.6 mm (5 1/4 in)	—	5062-3957	—
177.0 mm (7 in)	—	5062-3960	—
Quartz Gray Color			
88.1 mm (3 1/2 in)	5063-9239	5063-9240	5063-9241
132.6 mm (5 1/4 in)	—	5063-9243	—
177.0 mm (7 in)	—	5063-9245	—

Support Shelves

	Parchment White	Quartz Gray
88.1 mm (3 1/2 in)	5062-3996	5063-9255
132.6 mm (5 1/4 in)	5062-3997	5063-9256
177.0 mm (7 in)	5062-3998	5063-9257

Required Slide Rail Kit

1494-0015	Slide Rail Kit for Support Shelf

Replacement Part for Support Shelf

1600-1424	Tie-down Clip

Support Shelf Filler Panels

		Parchment White	Quartz Gray
For 88.1 mm (3 1/2 in) H support shelf partially filled with instruments, and having the following front panel space to fill:	1/2 MW to fill	5062-4022	5002-3999
For 132.6 mm (5 1/4 in) H support shelf, and having the following front panel space to fill:	1/4 MW to fill	5062-4024	5002-4001
For 1/2 MW and having the following vertical space to fill:	43.2 mm (1 3/4 in) H	5062-4037	—

Rail Kits

E3663A	System II Rail Kit
E3664A	3rd Party Rail Kit
E3665A	VXI Rail Kit
C2788B	Computer Rail Kit
12679B	Special rails for 35199A

Instrument Rackmount Kits (continued)

Slide Rail Kits

Slide Kit: Non-tilting, Standard-duty	
1494-0060	Fits 345.4 D and 421.6 D
1494-0059	Fits 497.8 D and 574.0 D
Slide Kit: Non-tilting, Heavy-duty	
1494-0058	Fits 345.4 D and 421.6 D
End Brackets	
1494-0061	Standard-duty Quantity: 4
1494-0064	Heavy-duty Quantity: 4

Lock Link Kit

5061-9694	Lock Link Kit

Small Parts, Cables and Adapters

Drawers

35181C	89 mm (3.5 in) Drawer
35181G	133 mm (5.25 in) Drawer

Plain Shelf

E3666A	Plain shelf (does not slide)

Work Surface

46298N	Work Surface

Rack Filler Panels

Parchment	Quartz	
40101A	**E7731A**	1 EIA Unit
40102A	**E7732A**	2 EIA Unit
40103A	**E7733A**	3 EIA Unit
40104A	**E7734A**	4 EIA Unit
40105A	**E7735A**	5 EIA Unit
40106A	**E7736A**	6 EIA Unit
40107A	**E7737A**	7 EIA Unit

Feedthrough Panels

E3668A	Feedthough Panel w/2 cutout grooves
E3669A	BNC-BNC (f) to (f) Panel

Mounting Hardware

E7797A	50 Clip-on nuts; 50 10-32 screws; Quartz gray
46298R	50 Clip-on nuts; 50 10-32 screws; Parchment white
0590-0804	1 Clip-on nut
0570-1366	1 10-32 screw
5062-4078	Inch Screw Kit (28 ea. 8-32; 20 ea. 6-32)

Additional Hardware

5062-3999	Locking Feet Kit

Cables and Adapters

IEC-320 Cables

8120-1575	IEC-320 Female-Male Power Cable (30 in)
8120-1860	IEC-320 Female-Male Power Cable (60 in)

Testmobiles and Accessories

Testmobiles

1180B	Scope cart
1182A	Instrument cart
1181A	System cart

Accessories

35183A	Testmobile (1180B) Work Surface
35181A	Testmobile Plotter/Printer Stand
35181B	Testmobile Keyboard Shelf
35181C	89 mm (3.5 in) Drawer
35181G	133 mm (5.25 in) Drawer
35181D	Testmobile Work Surface
35181E	Testmobile Antistatic Mat for 35181D
35182A	Testmobile Storage Drawer (3.5 in), Support Shelf
35182B	Testmobile Storage Drawer (5.25 in), Support Shelf
92199B	Power Strip (US) 5 receptacles
92199E	Power Strip (IEC-320) 4 receptacles

8120-1575	IEC-320 Female-Male Power Cable (30 in)
8120-1860	IEC-320 Female-Male Power Cable (60 in)
5181-8707	IEC-320 Male Power Cable Adapter

Replacement Parts

1530-2054	Tie-down Assembly Strap for the 1180B
1530-2228	Tie-down Assembly Strap for the 1181A and 1182A

1180B Testmobile, Scope cart 26, 27
1182A Testmobile, Instrument cart 26, 27
1181A Testmobile, System cart 26, 27
12679B Special rails for 35199A 11, 34

1494-0015 Slide Rail Kit for Support Shelf 17
1494-0058 Slide Kit: Non-tilting, Heavy Duty 20
1494-0059 Slide Kit: Non-tilting, Standard-duty 20
1494-0060 Slide Kit: Non-tilting, Standard-duty 20
1494-0061 End Brackets: Standard-duty 20
1494-0064 End Brackets: Heavy-duty 20

35181A Testmobile Plotter/Printer Stand 28
35181B Testmobile Keyboard Shelf 28
35181C Drawer 89 mm (3.5 in) 21, 29
35181D Testmobile Work Surface 28
35181E Testmobile Antistatic Mat for 35181D 28
35181G Drawer 133 mm (5.25 in) 21, 28, 29
35182A Testmobile Drawer, Support Shelf 28
35182B Testmobile Drawer, Support Shelf 28
35183A Testmobile (1180B) Work Surface 28

40101A 1 EIA Unit Filler Panel, Parchment white 22
40102A 2 EIA Unit Filler Panel, Parchment white 22
40103A 3 EIA Unit Filler Panel, Parchment white 22
40104A 4 EIA Unit Filler Panel, Parchment white 22
40105A 5 EIA Unit Filler Panel, Parchment white 22
40106A 6 EIA Unit Filler Panel, Parchment white 22
40107A 7 EIA Unit Filler Panel, Parchment white 22
46298N Work Surface 22
46298R Hardware, Parchment white 22

5002-3999 Support shelf filler panel, Quartz gray 17
5002-4001 Support shelf filler panel, Quartz gray 17
5061-9694 Lock Link Kit 18
5062-3957 Adapter Kit, Parchment white 16
5062-3960 Adapter Kit, Parchment white 16
5062-3971 Adapter Kit, Parchment white 16
5062-3972 Adapter Kit, Parchment white 16
5062-3974 Flange Kit, Parchment white 14, 15
5062-3975 Flange Kit w/handles, Parchment white 14, 15
5062-3976 Flange Kit, Parchment white 14, 15
5062-3977 Flange Kit, Parchment white 14, 15
5062-3978 Flange Kit, Parchment white 14, 15
5062-3979 Flange Kit, Parchment white 14, 15
5062-3980 Flange Kit, Parchment white 14, 15
5062-3981 Flange Kit, Parchment white 14, 15
5062-3982 Flange Kit w/handles, Parchment white 14, 15
5062-3983 Flange Kit w/handles, Parchment white 14, 15
5062-3984 Flange Kit w/handles, Parchment white 14, 15
5062-3985 Flange Kit w/handles, Parchment white 14, 15
5062-3986 Flange Kit w/handles, Parchment white 14, 15
5062-3987 Flange Kit w/handles, Parchment white 14, 15
5062-3988 Front Handle Kit, Parchment white 14, 15
5062-3989 Front Handle Kit, Parchment white 14, 15
5062-3990 Front Handle Kit, Parchment white 14, 15
5062-3991 Front Handle Kit, Parchment white 14, 15
5062-3992 Front Handle Kit, Parchment white 14, 15
5062-3996 Support Shelf, Parchment white 17
5062-3997 Support Shelf, Parchment white 17
5062-3998 Support Shelf, Parchment white 17
5062-3999 Locking Feet Kit 18
5062-4022 Support shelf filler panel, Parchment white 17
5062-4024 Support shelf filler panel, Parchment white 17
5062-4037 Support shelf filler panel, Parchment white 17
5062-4069 Flange Kit - Prev. supplied handles, Parchment white 14, 15
5062-4071 Flange Kit - Prev. supplied handles, Parchment white 14, 15
5062-4072 Flange Kit - Prev. supplied handles, Parchment white 14, 15
5062-4073 Flange Kit - Prev. supplied handles, Parchment white 14, 15
5062-4074 Flange Kit - Prev. supplied handles, Parchment white 14, 15
5062-4078 Inch Screw Kit 18
5063-9212 Flange Kit, Quartz gray 14, 15
5063-9213 Flange Kit, Quartz gray 14, 15
5063-9214 Flange Kit, Quartz gray 14, 15
5063-9215 Flange Kit, Quartz gray 14, 15
5063-9216 Flange Kit, Quartz gray 14, 15
5063-9217 Flange Kit, Quartz gray 14, 15
5063-9218 Flange Kit, Quartz gray 14, 15
5063-9219 Flange Kit w/handles, Quartz gray 14, 15
5063-9221 Flange Kit w/handles, Quartz gray 14, 15
5063-9222 Flange Kit w/handles, Quartz gray 14, 15
5063-9223 Flange Kit w/handles, Quartz gray 14, 15
5063-9224 Flange Kit w/handles, Quartz gray 14, 15
5063-9225 Flange Kit w/handles, Quartz gray 14, 15
5063-9226 Front Handle Kit, Quartz gray 14, 15
5063-9227 Front Handle Kit, Quartz gray 14, 15
5063-9228 Front Handle Kit, Quartz gray 14, 15
5063-9229 Front Handle Kit, Quartz gray 14, 15
5063-9230 Front Handle Kit, Quartz gray 14, 15
5063-9232 Flange Kit - Prev. supplied handles, Quartz gray ... 14, 15
5063-9234 Flange Kit - Prev. supplied handles, Quartz gray ... 14, 15
5063-9235 Flange Kit - Prev. supplied handles, Quartz gray ... 14, 15
5063-9236 Flange Kit - Prev. supplied handles, Quartz gray ... 14, 15
5063-9237 Flange Kit - Prev. supplied handles, Quartz gray ... 14, 15
5063-9239 Adapter Kit, Quartz gray 16
5063-9240 Adapter Kit, Quartz gray 16
5063-9241 Adapter Kit, Quartz gray 16
5063-9243 Adapter Kit, Quartz gray 16
5063-9245 Adapter Kit, Quartz gray 16
5063-9255 Support Shelf, Quartz gray 17
5063-9256 Support Shelf, Quartz gray 17
5063-9257 Support Shelf, Quartz gray 17
5181-8707 IEC-320 Male Power Cable Adapter 23, 28

8120-1575 IEC-320 Female-Male Power Cable (30 in) 23
8120-1860 IEC-320 Female-Male Power Cable (60 in) 23

92199B Power Strip (US) 5 receptacles 28
92199E Power Strip (IEC 320) 4 receptacles 28

AW3 100/120V PDU (North America) 5
AW5 200/240V PDU (International) 5
AXH Bare Rack 3
C2788B Computer Rail Kit 19, 34
C2790A 30 lb. Steel Ballast 10

E3660A 1.1 m Rack Cabinet, Parchment (21 EIA U) 3, 4
E3905A 1.3 m Rack Cabinet, Parchment (25 EIA U) 3, 4
E3661A 1.6 m Rack Cabinet, Parchment (32 EIA U) 3, 4
E3662A 2.0 m Rack Cabinet, Parchment (41 EIA U) 3, 4
E3663A System II Rail Kit 19, 34
E3664A 3rd Party Rail Kit 19, 34
E3665A VXI Rail Kit 19, 34
E3666A Plain Shelf (does not slide) 21
E3668A Feedthough Panel w/2 cutout grooves 22
E3669A BNC-BNC (f) to (f) Panel 22
E3900A Fixed Keyboard, Parchment white 12

E4079A Retractable Keyboard, Parchment white 12
E4451A 100/120V PDU (North America) 5, 6
E4452A 200/240V (North America) 5, 6
E4453A 200/240V (International) 5, 6
E4455A 100/120V PDU (North America) 5, 6
E4456B 200/240V (North America) 5, 6
E4457B 200/240V (International) 5, 6
E4458A 1.6 m Solid Side Panel 8
E4459A 2.0 m Solid Side Panel 8
E4460A 1.1 m Plexiglas Front Door 7
E4461A 1.3 m Plexiglas Front Door 7
E4462A 1.6 m Plexiglas Front Door 7
E4463A 2.0 m Plexiglas Front Door 7
E4466A 1.1 m Tie Kit 8
E4467A 1.3 m Tie Kit 8
E4468A 1.6 m Tie Kit 8
E4469A 2.0 m Tie Kit 8
E4470A 100/120V 200 cfm Fan 9
E4471A 200/240V 200 cfm Fan 9
E4472A PDU Installation Kit 5
E4476A 1.6 m Solid Rear Door 7
E4477A 1.6 m Vented Rear Door 7
E4478A 2.0 m Solid Rear Door 7
E4479A 2.0 m Vented Rear Door 7

E5922A Fits 14"–19" Monitors 11

E7590A 1.3 m Rack Cabinet, Quartz gray (25 EIA U) 3, 4
E7685A PDU Installation Kit, Quartz gray 5
E7686A PDU Brackets 5
E7687A 200/240V 700 cfm Fan 9
E7714A Fixed Keyboard, Quartz gray 12
E7731A 1 EIA Unit Filler Panel, Quartz gray 22
E7732A 2 EIA Unit Filler Panel, Quartz gray 22
E7733A 3 EIA Unit Filler Panel, Quartz gray 22
E7734A 4 EIA Unit Filler Panel, Quartz gray 22
E7735A 5 EIA Unit Filler Panel, Quartz gray 22
E7736A 6 EIA Unit Filler Panel, Quartz gray 22
E7737A 7 EIA Unit Filler Panel, Quartz gray 22
E7797A Hardware, Quartz gray 22

J1518A Retractable Keyboard, Quartz gray 12
J1519A Fits 14"–19" Monitors, Quartz gray 11
J1520A Plain Shelf, Quartz gray 21

For more information, call your local HP sales office listed in your telephone directory or an HP regional office listed below for the location of your nearest sales office.

United States of America:
Rockville, MD
(301) 670 4300

Chicago, IL
(312) 474 4000

Houston, TX
(713) 439 5300

Fullerton, CA
(714) 999 6700

Canada:
(1 905) 206 4725

Japan:
(81 3) 3331 6111

Latin America:
Mexico
(525) 258 4600

Brazil
(55 11) 726 8000

Australia/New Zealand:
(61 3) 9272 2895

Far East:
Hong Kong
(852) 2599 7777

Korea
(82 2) 769 0114

Taiwan
(82 2) 712 0404

Singapore
(65) 271 9444

India
(91 11) 682 6000

China
(86 10) 6506 3888

In Europe, Africa and Middle East, please call your local HP sales office or representative:

Austria:
(43 1) 25000 0

Belgium and Luxembourg:
(32 2) 778 3111

Denmark:
(45 45) 99 10 00

Finland:
(358 9) 88 721

France:
(33 1) 69 82 60 60

Germany:
(49 7031) 14 0

Greece:
(30 1) 689 6411

Ireland:
(353 1) 61 58200

Italy:
(39 2) 921 21

Netherlands:
(31 20) 5476911

Norway:
(47) 2273 5600

Portugal:
(351 1) 482 85 00

Spain:
(34 3) 401 9100

Sweden:
(46 8) 444 2000

Switzerland:
(41 1) 735 71 11

Turkey:
(90 212)224 5925

United Kingdom:
(44 1344) 360000

For countries not listed, contact Hewlett-Packard, International Sales Branch, Geneva, Switzerland
Tel: +41 22 780 4111
Fax: +41 22 780 4220

Technical information in this document is subject to change without notice.
© Copyright Hewlett-Packard Company 1998. All Rights Reserved. Reproduction, adaptation, or translation without prior written permission is prohibited, except as allowed under the copyright laws.

Update Information

Last Electronic Update—10/98
Last Printed Update—09/97

5965-9759EUS
5965-9759EN

Printed on recycled paper