Dual 1x4, 50 Ohm RF Multiplexer HP E1366A

Technical Specifications

- **Two 1x4 multiplexers**
- **Up to 1.3 GHz signals switched**
- **BNC connectors**
- **Off-channels terminated**
- **Low insertion loss**

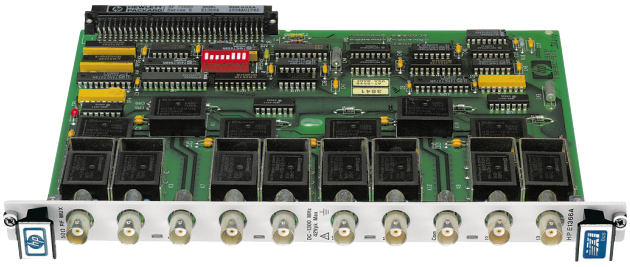

Description

The HP E1366A 50 Ohm RF Multiplexer is a **B-size, 1-slot, register-based VXI module.** It is the ideal choice to switch test signals to your oscilloscope and spectrum, network, distortion analyzers, or other RF equipment. The HP E1366A is identical to the HP E1367A, except that the HP E1366A has a 50 Ohm characteristic impedance.

Switching consists of connecting a channel to its common terminal. The HP E1366A can easily be used with SCPI commands to scan multiple channels, where each channel is switched to its common, one at a time. When open (disconnected from common), each channel is connected to a 50 Ohm termination.

This multiplexer module is arranged as two independent banks of channels (Bank 0 and Bank 1), each acting as a 1x4 1-wire multiplexer. Only one channel in each bank can be connected to its common at any time. Each channel consists of a nonlatching armature relay. At power-on or reset, all channels are open and connected to their termination resistors. The termination resistor can be removed if desired. The multiplexer relays are arranged in a tree-switched configuration, providing high isolation and low VSWR.

Refer to the HP Website for instrument driver availability and downloading instructions.

Cables and Connectors

Various 50 Ohm cables are available from HP for connecting to the BNC connectors on the front panel of the multiplexer. Adaptors and other connectors are also available.

C-size Adapter

For installing the HP E1366A in a C-size mainframe, the HP E1403B active adapter is recommended.

Specifications

Input

Maximum voltage (center or shield-to-center, shield or chassis): 42 V
Maximum current (per channel or common):
- **DC:** 1 A
- **AC rms:** 1 A

Maximum power (per channel or common):
- **DC:** 24 W
- **AC:** 24 VA

DC

Maximum thermal offset: 6 μV
Closed channel resistance (typical): <1 Ohm initial, <3 Ohm end of relay life
Insulation resistance (between any two points): >10E8 Ohm ≤40 °C, ≤65% RH

AC

Note: For AC performance, ZL=ZS=ZO, ≤40 °C, RH≤95% for C-size, RH ≤65% for B-size

Characteristic impedance (Zo): 50 Ohm
Insertion loss:
- **<10 MHz:** <0.3 dB
- **<100 MHz:** <0.7 dB
- **<500 MHz:** <1.5 dB
- **<1.3 GHz:** <3.0 dB
- **<3 GHz (typ):** n/a

Crosstalk (channel-to-channel):
Derate crosstalk specifications by 6 dB if all channels are unterminated.
- **<10 MHz:** <−90 dB
- **<100 MHz:** <−80 dB

Crosstalk (channel-to-channel, one channel closed or channel-to-common) (terminated):

Derate crosstalk specifications by 6 dB if all channels are unterminated.

- **<200 MHz:** n/a
- **<500 MHz:** <−60 dB
- **<1.3 GHz:** <−40 dB
- **<3 GHz (typ):** n/a

VSWR:
- **<10 MHz:** <1.2
- **<100 MHz:** <1.25
- **<200 MHz:** n/a
- **<500 MHz:** <1.35
- **<1.3 GHz:** <1.55
- **<3 GHz:** n/a

Risetime: <300 ps
Signal delay: <3 ns
Capacitance:
- **Center-shield:** <60 pF
- **Chassis-shield:** < 0.15 μF

General Characteristics

Relays: non-latching armature
Minimum relay life:
- **No load:** 5x10E6 operations
- **Rated load:** 10E5 operations

VXI Characteristics

VXI device type: Register-based, A16, slave only
Size: B
Slots: 1
Connectors: P1
Shared memory: None
VXI busses: None
C-size compatibility: Requires E1403B

Instrument Drivers

See the HP Website (http://www.hp.com/go/inst__drivers) for driver availability and downloading.

Command module firmware: ROM
Command module firmware rev: A.01
I-SCPI Win 3.1: Yes
I-SCPI Series 700: Yes
C-SCPI LynxOS: Yes
C-SCPI Series 700: Yes
HP VEE Drivers: Yes
VXI*plug&play* Win Framework: No
VXI*plug&play* Win95/NT Framework: No
VXI*plug&play* HP-UX Framework: No (not available at time of publication)

Module Current

	I_{PM}	I_{DM}
+5 V:	0.1	0.01
+12 V:	0.18	0.01
−12 V:	0	0
+24 V:	0	0
−24 V:	0	0
−5.2 V:	0	0
−2 V:	0	0

Cooling/Slot

Watts/slot: 3.00
ΔP mm H_2O: 0.05
Air Flow liter/s: 0.25

Ordering Information

Description	Product No.
50 ohm RF multiplexer (2 x 4:1)	HP E1366A
Service manual	HP E1366A 0B3
3 yr. retn. to HP to 1 yr. OnSite warr.	HP E1366A W01

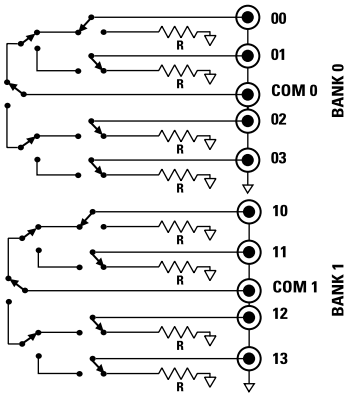

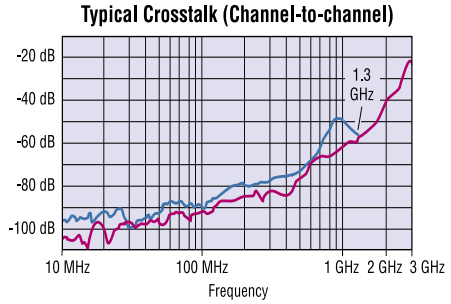

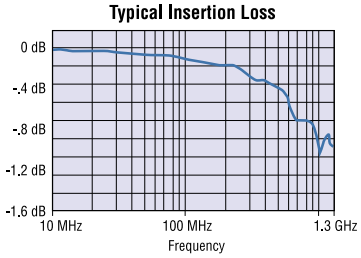

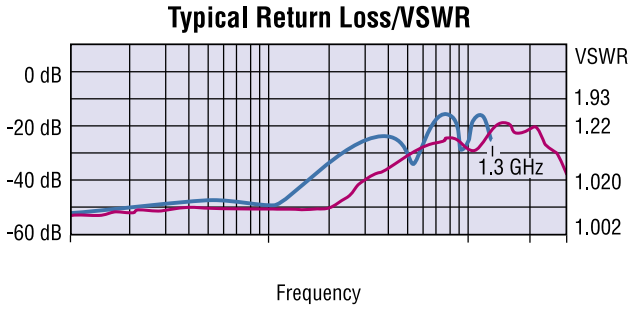

HP Publication No.: 5965-5608E