To ensure proper electrical and thermal performance
there must be a ground plane with 100%
solder connection underneath the part

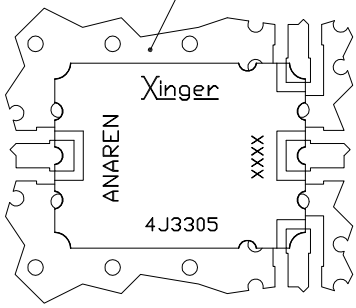

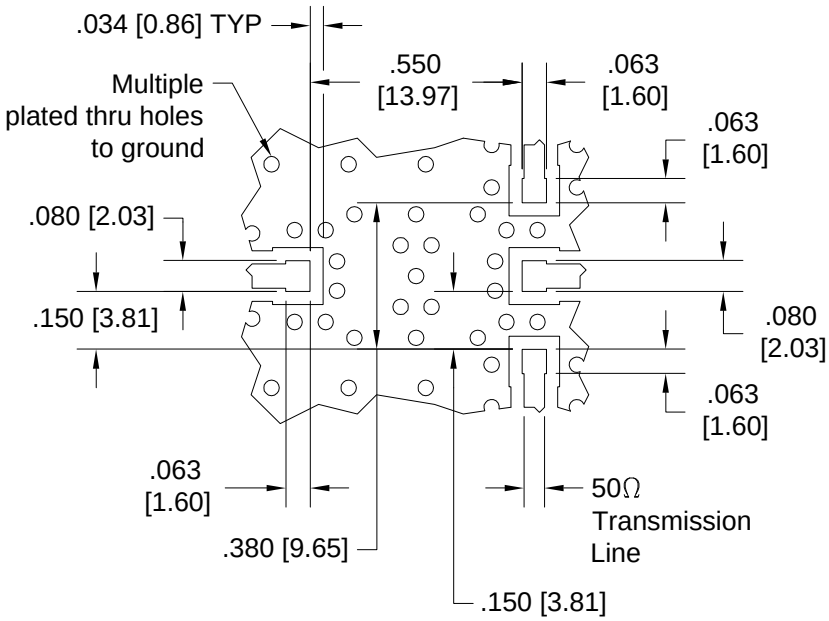

Dimensions are in Inches [Millimeters]
4J3305 Rev A Mounting Footprint