ZONE	REV	REVISIONS DESCRIPTION	ECO#	DATE	APPROVED
	A	RELEASED			

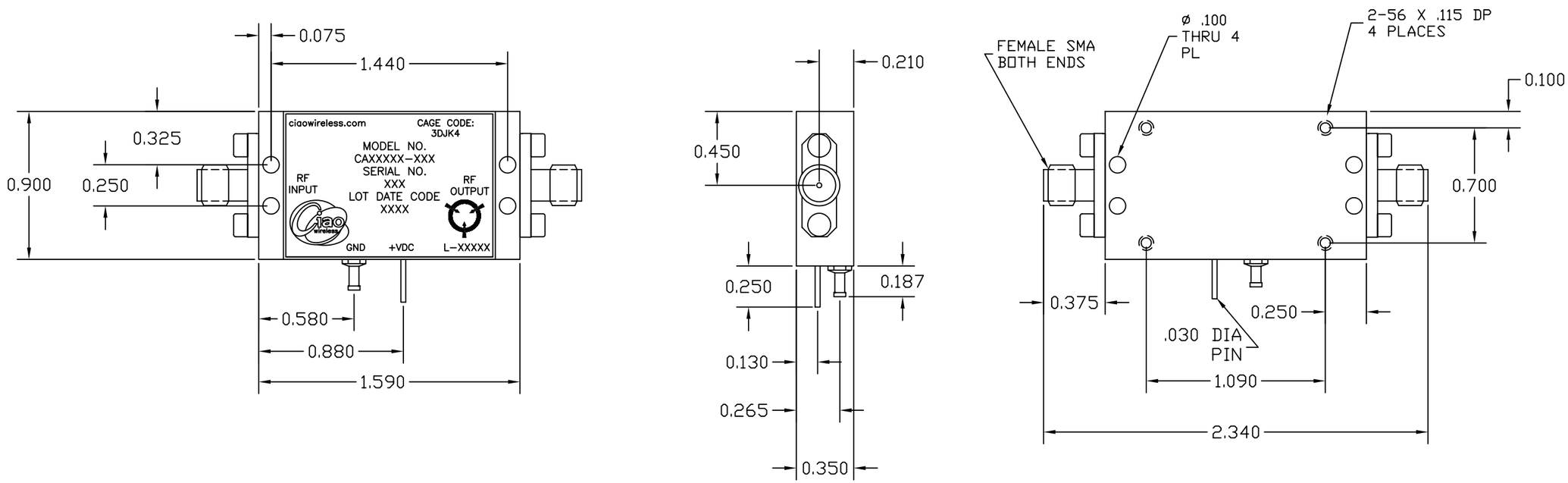

ITEM NO.	QTY REQD	PART OR IDENTIFYING NO.	NOMENCLATURE OR DESCRIPTION	MATERIAL SPECIFICATION

PARTS LIST

UNLESS OTHERWISE SPECIFIED: DIMENSIONS ARE IN INCHES. TOLERANCES ARE:
FRACTIONS ± 1/64 DECIMALS .XX ±.01 .XXX ±.010 HOLES .XX ±.01 .XXX ±.010 ANGLES ± 0°30'
MACHINED FINISH: 32 RMS
REMOVE BURRS .005 MAX

MATERIAL: ALUMINUM 6061-T6

FINISH: ELECTROLESS NICKEL PER MIL-C-26074 CLASS 4 GRADE B .0005 ± .0001 MAX

DO NOT SCALE DRAWING

CONTRACT NO.	
APPROVALS	DATE
DRAWN J. LACBAIN	3/15/04
CHECKED	
MECHANICAL ENGR	
ELECTRICAL ENGR	
PRODUCT ASSURANCE	
PLANNING	
MANUFACTURING	

CIAO WIRELESS
4000 VIA PESCADOR
CAMARILLO CA, 93012

F2 ICD AMPLIFIER

SIZE	CAGE CODE	DWG. NO.	REV.
B	3DJK4	30037	A

SCALE 1/1 SHEET 1 OF 1

NEXT ASSY	USED ON

APPLICATION

DWG NO. 30037 REV A

DC-FORM-00015-1, REV A, 1/97