REVISIONS				
LTR	DESCRIPTION	E.C.N.	DATE	BY/APP'D
A	RELEASE TO DOCUMENT CONTROL.	07825	03/23/90	PG/SL
B	CONVERT FROM HOLGUIN TO ANVIL5K; REVISE TOP VIEW.	08467	03/26/91	PG/SL

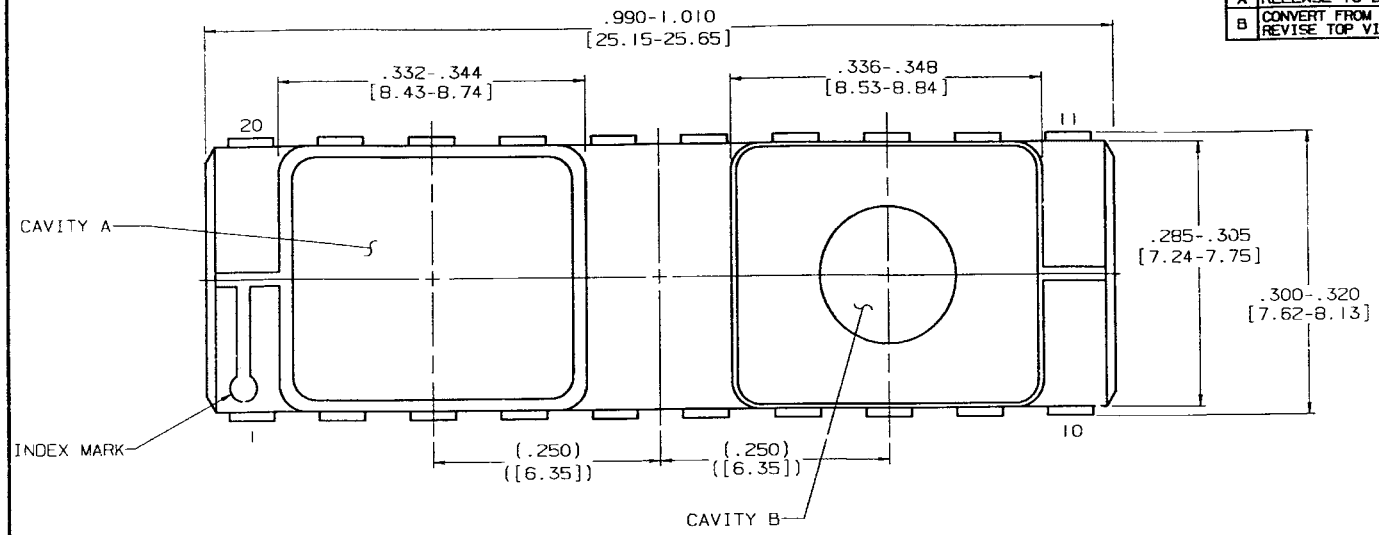

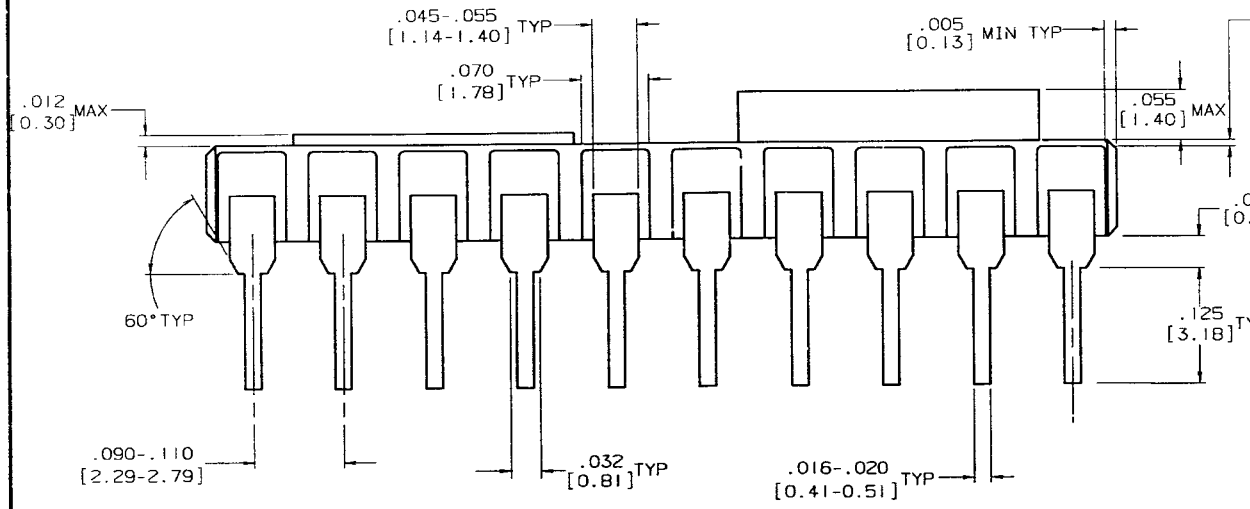

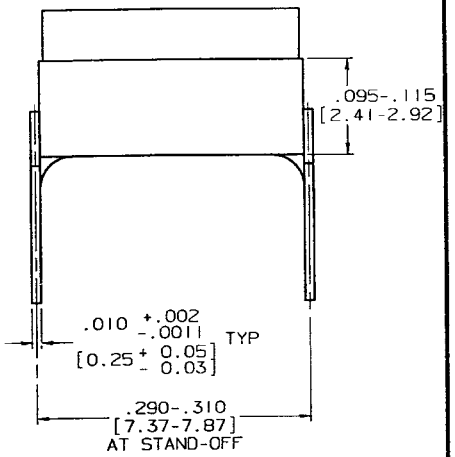

NOTES: UNLESS OTHERWISE SPECIFIED

1. PLATING SHALL BE 60 MICROINCHES/1.52 MICROMETERS MINIMUM GOLD OVER 50-350 MICROINCHES/1.27-8.89 MICROMETERS NICKEL.

CONTROLLING DIMENSION: INCH

APPROVALS	DATE
DRAWN P. GIFFORD	03/23/90
DESIG. CHK. Marta Tuley	04/01/91
ENGR. CHK. Mark Wen-Lu	4/3/91
APPROVAL	

PROJECTION INCH [MM]

NATIONAL SEMICONDUCTOR CORPORATION
2900 Semiconductor Drive, Santa Clara, CA 95052-8090

HERMETIC DIP,
20 LEAD,
DUAL CAVITY

SCALE	SIZE	DRAWING NUMBER	REV
N/A	C	MKT-D20B	B

DO NOT SCALE DRAWING — SHEET 1 OF 1