REVISIONS				
LTR	DESCRIPTION	E.C.N.	DATE	BY/APP'D
A	RELEASE TO DOCUMENT CONTROL.	07082	07/24/89	DEG/SL
B	REVISE AND REDRAW PER NEW STANDARD.	11368	02/08/96	DEG/

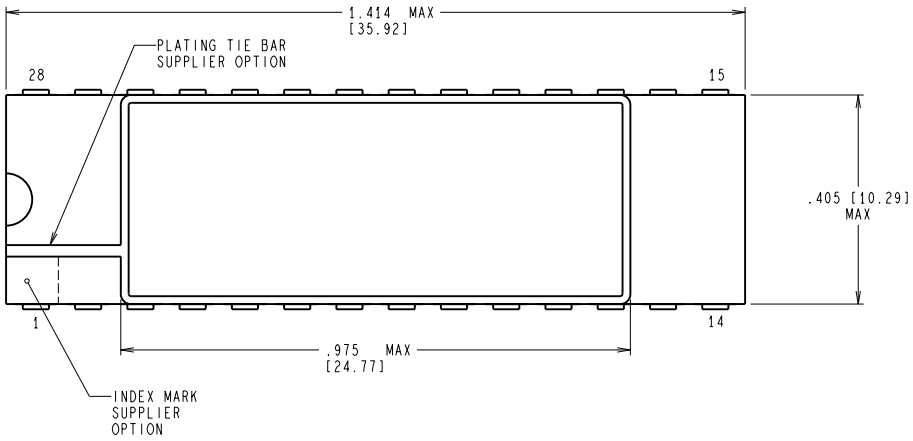

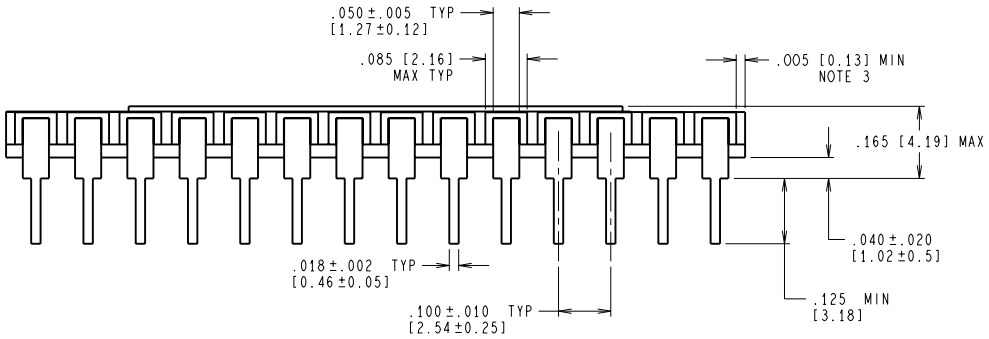

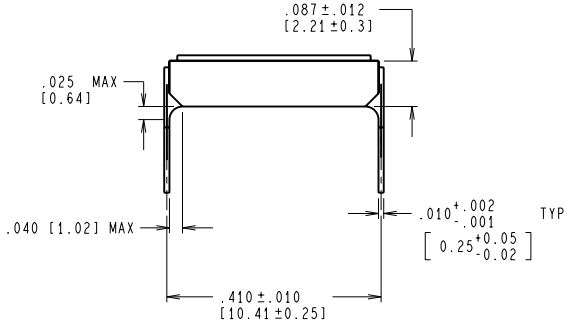

CONTROLLING DIMENSION IS INCH
VALUES IN [ ] ARE MILLIMETERS

NOTES: UNLESS OTHERWISE SPECIFIED.

1. LEAD FINISH TO BE ONE OF THE FOLLOWING:

   a. 200 MICROINCHES/5.08 MICROMETERS MINIMUM SOLDER MEASURED AT THE CREST OF THE MAJOR FLATS.

   b. 50 MICROINCHES/1.27 MICROMETERS MINIMUM GOLD OVER 50 TO 350 MICROINCHES/1.27 TO 8.89 MICROMETERS NICKEL UNDERPLATE.

2. LEAD FINISH, NICKEL UNDERPLATE AND BASIS METAL SHALL CONFORM TO THE REQUIREMENTS OF MIL-PRF-38535.

3. DIMENSION .005 IN/0.13mm MINIMUM SHALL BE MEASURED FROM THE EDGE OF THE FURTHEST EXTENSION OF THE METAL PAD OR LEAD.

4. REFERENCE JEDEC REGISTRATION MS-015, VARIATION BD, DATED 7/90.

MIL-PRF-38535
CONFIGURATION CONTROL

APPROVALS	DATE
DRAWN *Dwayne Grady*	02/08/96
DFTG. CHK.	
ENGR. CHK.	
APPROVAL	

NATIONAL SEMICONDUCTOR CORPORATION
2900 Semiconductor Drive, Santa Clara, CA 95052-8090

DIP, SIDEBRAZE,
CERAMIC,
28 LEAD, .400 CTRS.

PROJECTION INCH [MM]

SCALE	SIZE	DRAWING NUMBER	REV
N/A	C	MKT-D28F	B

DO NOT SCALE DRAWING — SHEET 1 of 1

INP
SEAL R
LID
LID RA
LEADCO
BODY LE
BODY WI

* THIS PART
IF THE LEA
IF THE LEA
IF THE LEA
IF THE LEA
IF THE LEA