REVISIONS				
LTR	DESCRIPTION	E.C.N.	DATE	BY/APP'D
A	RELEASE TO DOCUMENT CONTROL	459	11/13/2001	MS/AP
B	ADD LAND PATTERN; REORIENT TERM'L NUMBERING; CHANGE CONTROLLING DIM TO INCH	500	12/12/2001	TL/AT

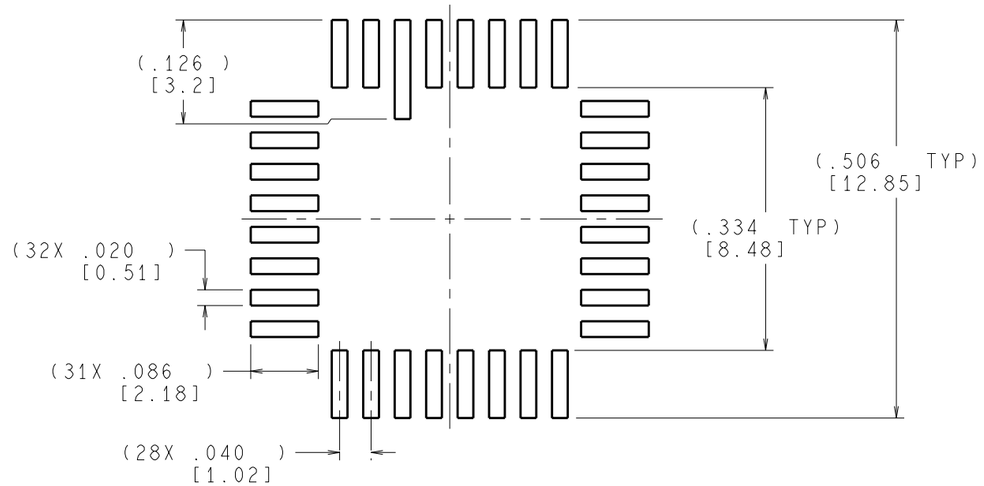

RECOMMENDED LAND PATTERN

CONTROLLING DIMENSION IS INCH
VALUES IN [ ] ARE MILLIMETERS

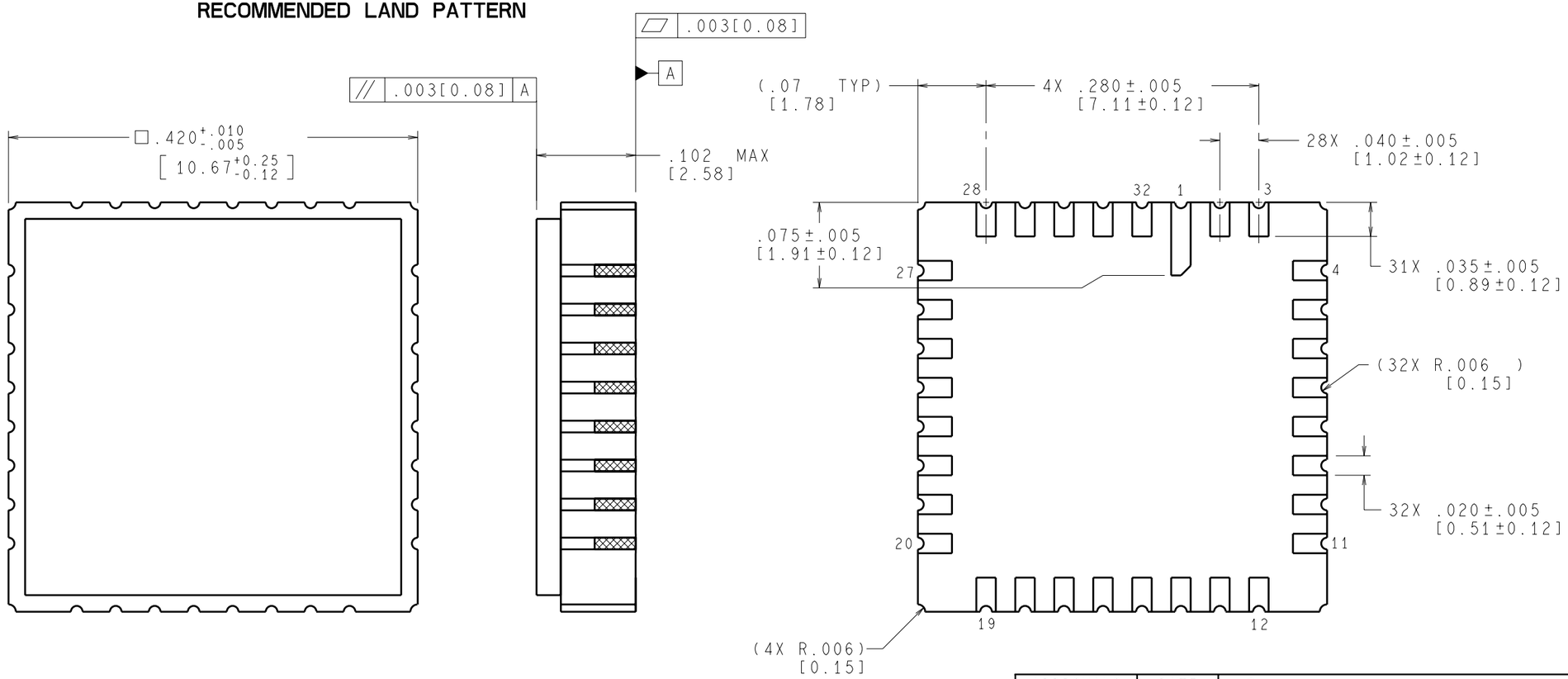

NOTES: UNLESS OTHERWISE SPECIFIED

1. ALL EXPOSED METALIZED AREAS SHALL BE GOLD PLATED 0.3 MICROMETERS [12 MICROINCHES] MINIMUM THICK OVER NICKEL PLATE.

2. REFERENCE JEDEC REGISTRATION MS-009, VARIATION AD.

APPROVALS	DATE
DRAWN MARTA SUCHY	11/13/2001
DFTG. CHK. MARTA SUCHY	12/12/2001
ENGR. CHK. ANNY TU	12/12/2001

PROJECTION INCH [MM]

National Semiconductor
2900 Semiconductor Dr, Santa Clara, CA 95052-8090

LCC, CERAMIC, GLASS LID, .420x.420x.102in, 32 TERMINAL, .040in PITCH

SCALE	SIZE	DRAWING NUMBER	REV
N/A	C	(SC)MKT-EA32E	B

DO NOT SCALE DRAWING | SHEET 1 of 1