REVISIONS				
LTR	DESCRIPTION	E.C.N.	DATE	BY/APP'D
A	RELEASE TO DOCUMENT CONTROL	08156	09/24/90	TL

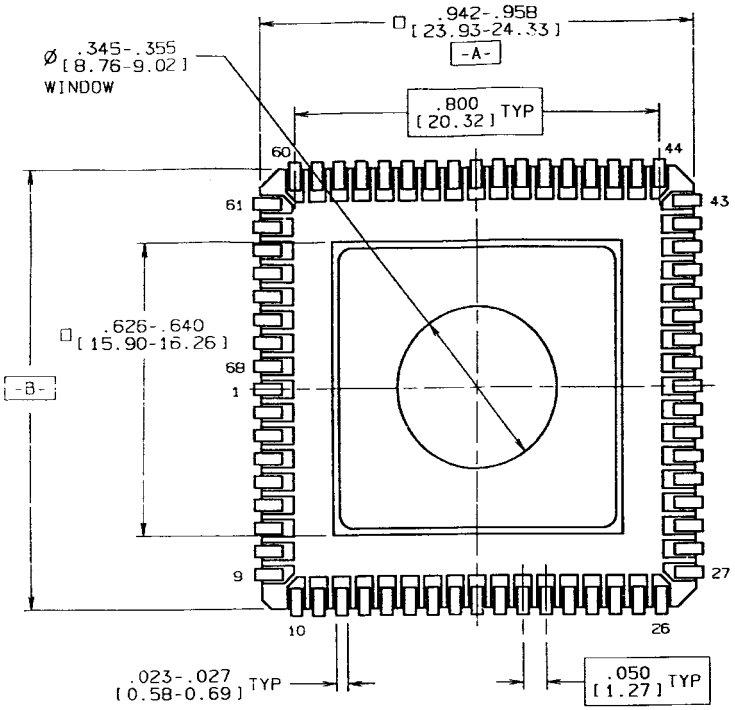

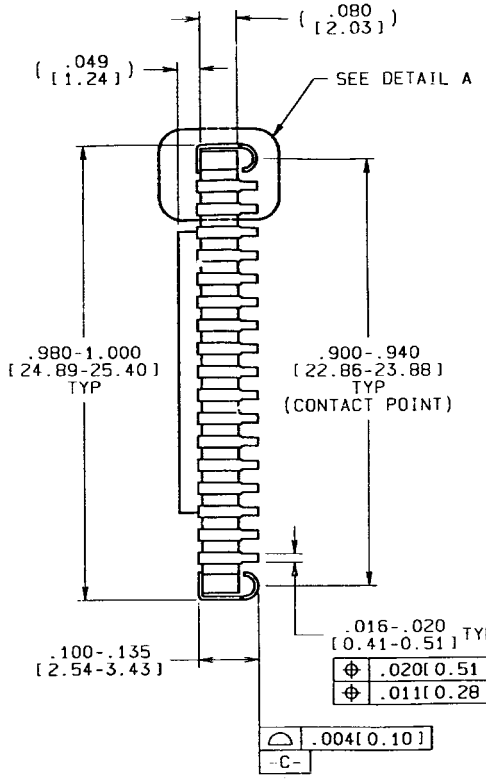

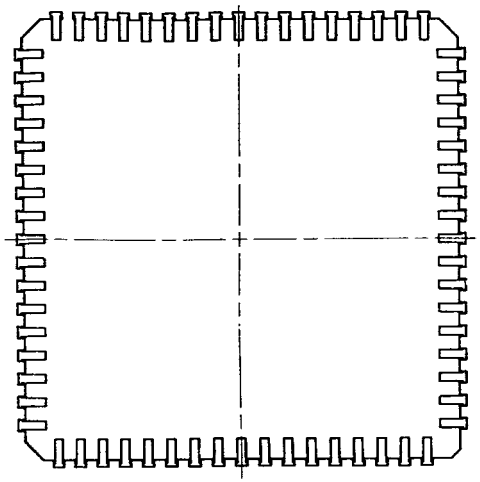

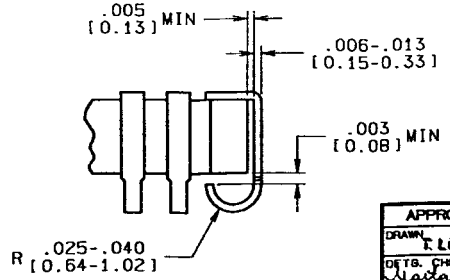

DETAIL A

TYPICAL, ROTATED 90°

NOTES: UNLESS OTHERWISE SPECIFIED

1. LEAD FINISH TO BE 50 TO 100 MICROINCHES / 1.27 TO 2.54 MICROMETERS GOLD PLATING OVER 50 TO 350 MICROINCHES / 1.27 TO 8.89 MICROMETERS NICKEL.

APPROVALS	DATE
DRAWN T. LEQUANG	09/24/90
DFTG. CHK.	09/26/90
ENGR. CHK.	9/26/90
APPROVAL	

PROJECTION INCH [MM]

NATIONAL SEMICONDUCTOR CORPORATION
2900 Semiconductor Drive, Santa Clara, CA 95052-8090

LEADED CHIP CARRIER, 68 LEAD, EPROM

SCALE	SIZE	DRAWING NUMBER	REV
N/A	C	MKT-EL68C	A

FORMERLY: N/A SHEET 1 OF 1