REVISIONS				
LTR	DESCRIPTION	E.C.N.	DATE	BY/APP'D
D	REVISE AND REDRAW PER CURRENT STANDARD; UPDATE TITLE & MIL/AERO STAMP.	11044	07/28/95	TL/

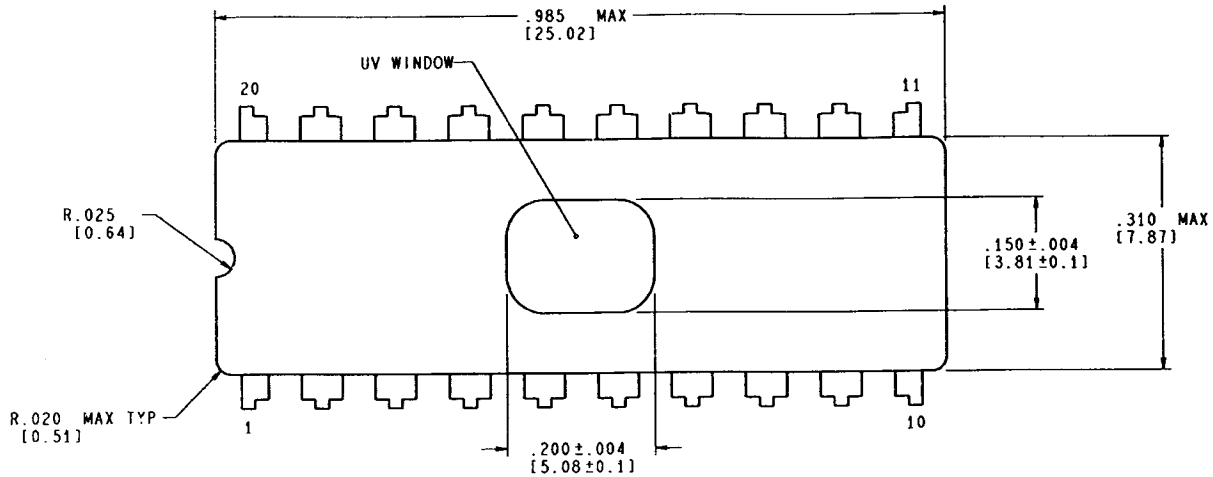

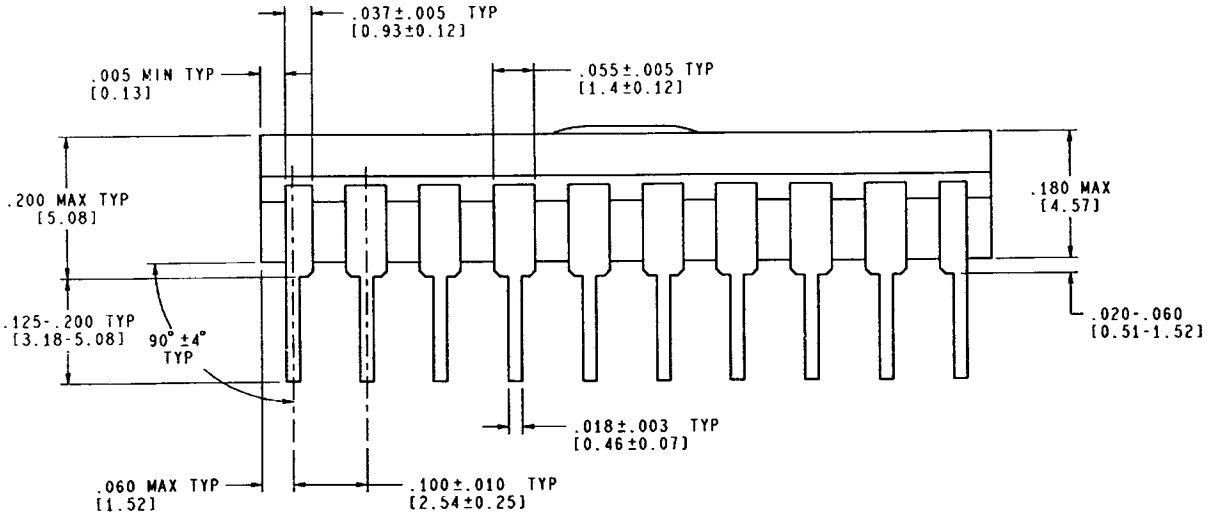

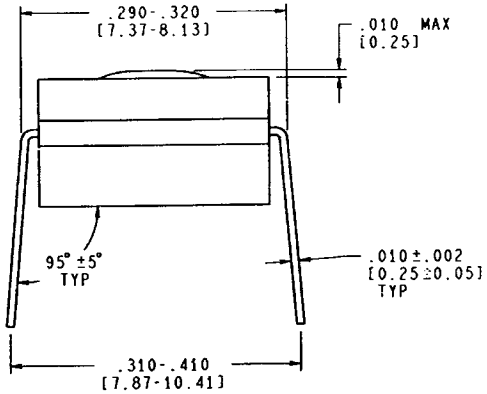

CONTROLLING DIMENSION IS INCH
VALUES IN [ ] ARE MILLIMETERS

MIL-PRF-38535
CONFIGURATION CONTROL

NOTES: UNLESS OTHERWISE SPECIFIED

1. SOLDER DIPPED WITH Sn60 OR Sn63 SOLDER CONFORMING TO A MINIMUM THICKNESS OF 200 MICROINCHES/ 5.08 MICROMETERS. SOLDER MAY BE APPLIED OVER LEAD BASIS METAL OR Sn PLATE.
2. NO JEDEC REGISTRATION AS OF JULY 28,1995.

APPROVALS	DATE
DRAWN T. LEQUANG	07/28/95
DES. CHK.	08/03/95
ENGR. CHK.	08/03/95

PROJECTION INCH [MM]

National Semiconductor
2900 Semiconductor dr, Santa Clara, CA 95052-8090

CERDIP, 20 LEAD,
.300 CENTERS,
EPROM

SCALE	SIZE	DRAWING NUMBER	REV
N/A	C	MKT-J20AQ	D

DO NOT SCALE DRAWING | SHEET 1 of 1