REVISIONS				
LTR	DESCRIPTION	E.C.N.	DATE	BY/APP'D
J	REVISE & REDRAW PER CURRENT STD.	09765	05/11/94	MS/SC
K	ADD: CONTROLLING DIMENSION IS INCH VALUES IN [ ] ARE MILLIMETERS	10455	06/06/94	MS/

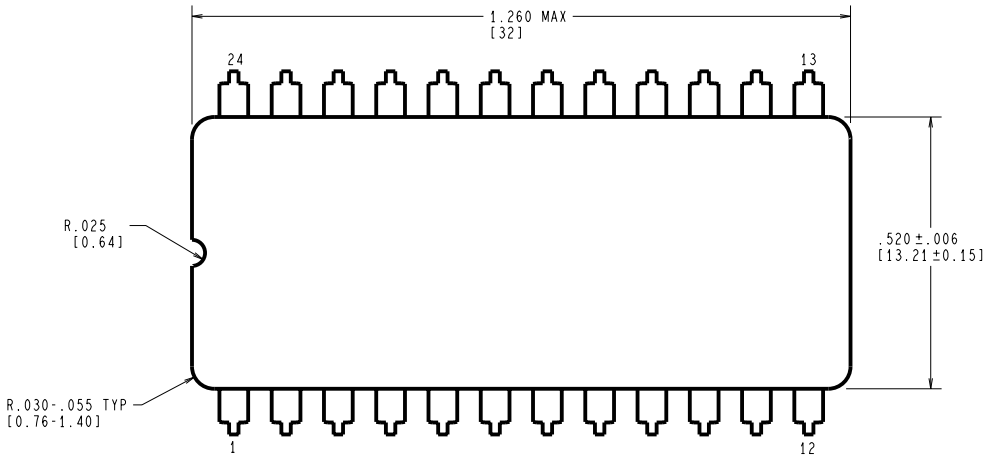

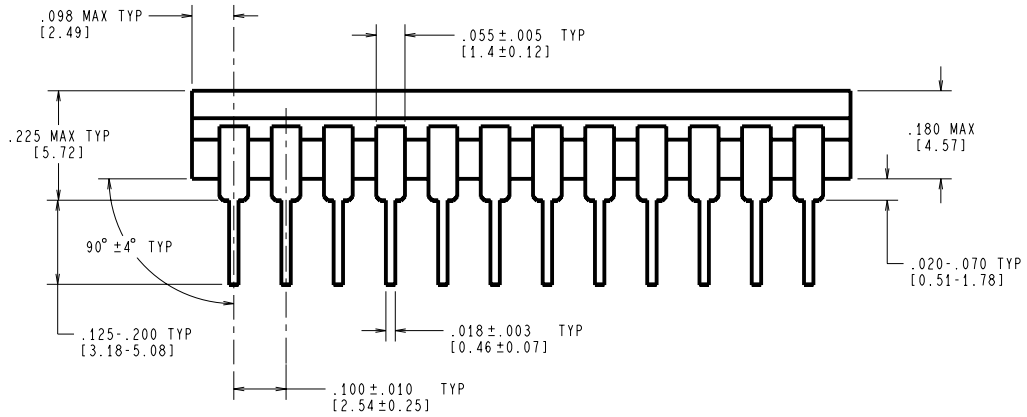

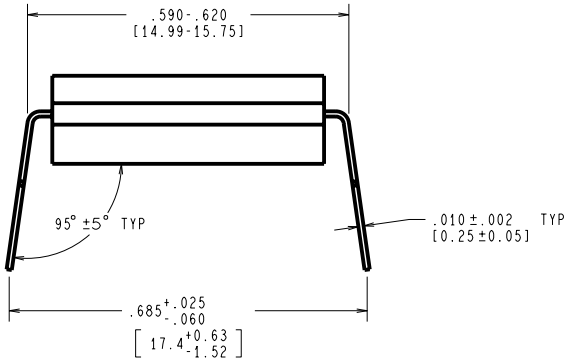

CONTROLLING DIMENSION IS INCH
VALUES IN [ ] ARE MILLIMETERS

NOTES: UNLESS OTHERWISE SPECIFIED

1. SOLDER DIPPED WITH Sn60 OR Sn63 SOLDER CONFORMING TO MIL-M-38510 TO A MINIMUM THICKNESS OF 200 MICROINCHES / 5.08 MICROMETERS. SOLDER MAY BE APPLIED OVER LEAD BASIS METAL OR Sn PLATE.
2. BUMPERS ARE AVAILABLE ON CERTAIN PRODUCTS. BUMPERS WILL ADD .040 IN / 1.02mm MAX TO THE LENGTH OF PACKAGE.
3. REFERENCE JEDEC REGISTRATION MO-103, VARIATION AA, DATED 02/1990.

MIL-M-38510
CONFIGURATION CONTROL

MIL/AERO
CONFIGURATION CONTROL

APPROVALS	DATE
DRAWN MARTA SUCHY	05/11/94
DFTG. CHK.	
ENGR. CHK.	
APPROVAL	

NATIONAL SEMICONDUCTOR CORPORATION
2900 Semiconductor Drive, Santa Clara, CA 95052-8090

CERDIP, 24 LEAD, .600 CENTERS

PROJECTION INCH [MM]

SCALE	SIZE	DRAWING NUMBER	REV
N/A	C	MKT-J24A	K

DO NOT SCALE DRAWING | SHEET 1 of 1