REVISIONS				
LTR	DESCRIPTION	E.C.N.	DATE	BY/APP'D
A	RELEASE TO DOCUMENT CONTROL	12580	12/11/2000	AS/TL/NS

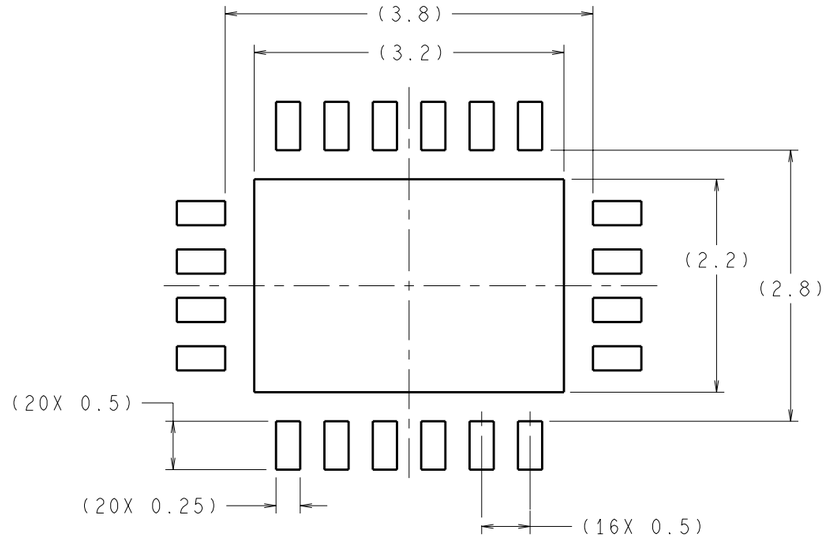

RECOMMENDED LAND PATTERN
1:1 RATIO WITH PKG SOLDER PADS

DIMENSIONS ARE IN MILLIMETERS

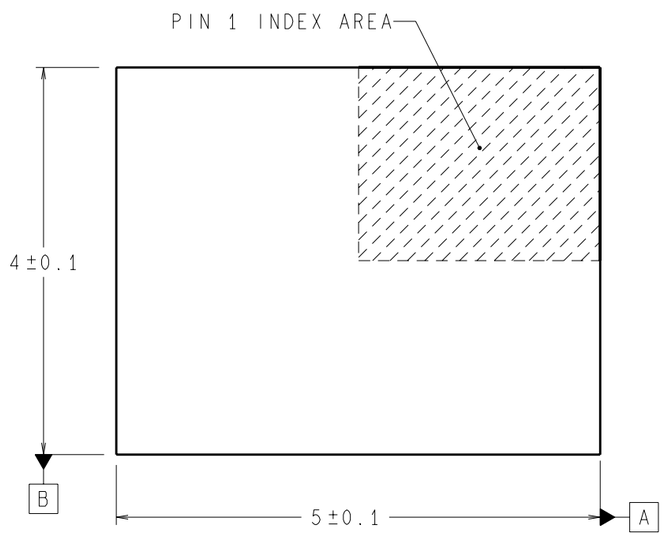

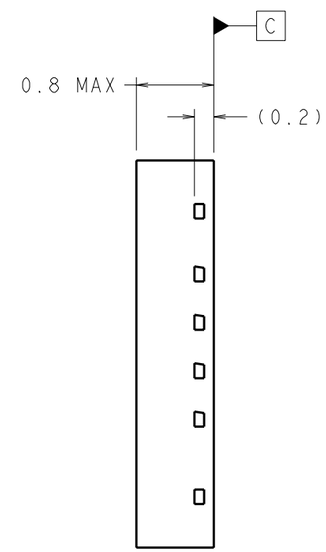

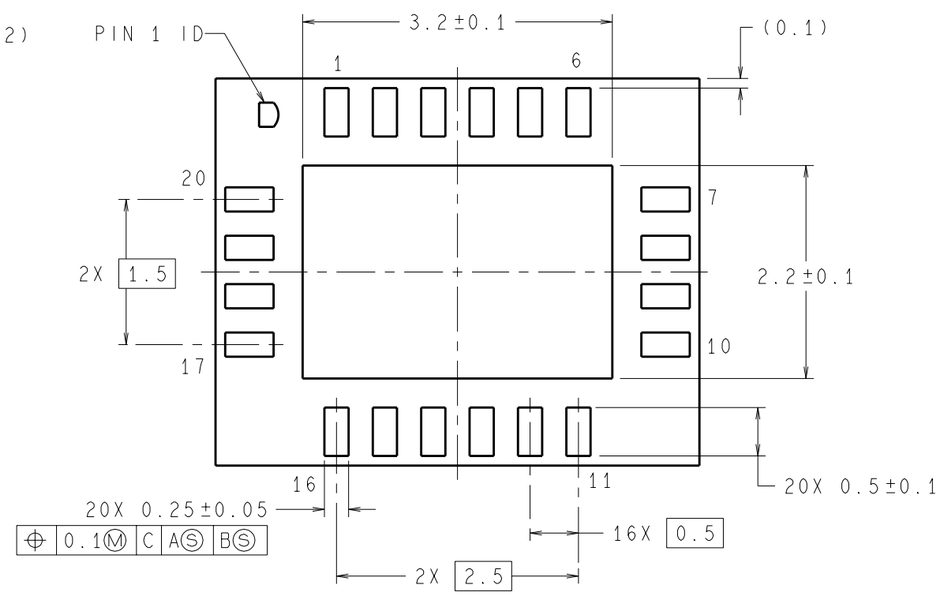

NOTES: UNLESS OTHERWISE SPECIFIED

1. STANDARD LEAD FINISH TO BE 5.08 MICROMETERS MINIMUM LEAD/TIN (SOLDER) ON COPPER.

2. NO JEDEC REGISTRATION AS OF DECEMBER 2000.

APPROVALS	DATE
DRAWN AFZNIZAM S.	12/11/2000
DFTG. CHK. THANH LEQUANG	12/11/2000
ENGR. CHK. N. SANTHIRAN	12/11/2000

PROJECTION INCH [MM]

National Semiconductor
2900 Semiconductor Dr, Santa Clara, CA 95052-8090

LLP, PLASTIC, QUAD,
5 X 4 X 0.8mm BODY,
20 LD, 0.5mm PITCH

SCALE	SIZE	DRAWING NUMBER	REV
N/A	C	(SC)MKT-LQA20B	A

DO NOT SCALE DRAWING | SHEET 1 of 1