REVISIONS				
REV	DESCRIPTION	E.C.N.	DATE	BY/APP'D
A	RELEASE TO DOCUMENT CONTROL	603	03/12/2002	SN/TL/JB
B	REVISE NOTE 1 & UPDATE NOTE 2.	976	04/02/2003	MS/RW

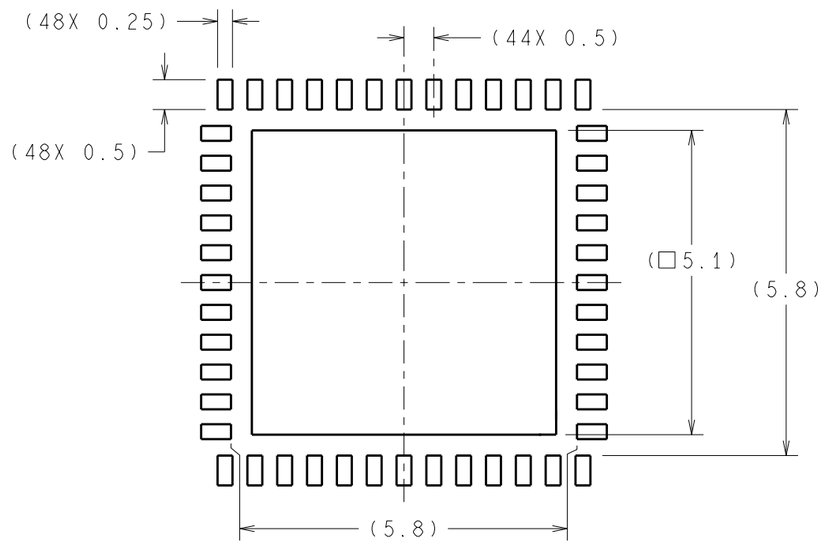

RECOMMENDED LAND PATTERN
1:1 RATION WITH PKG SOLDER PADS

DIMENSIONS ARE IN MILLIMETERS

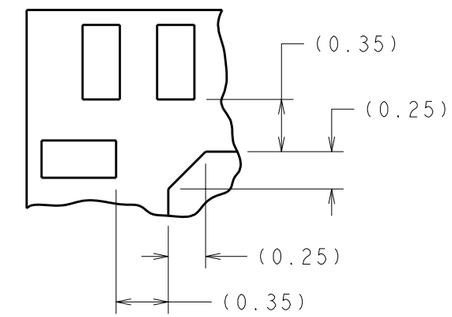

DETAIL A

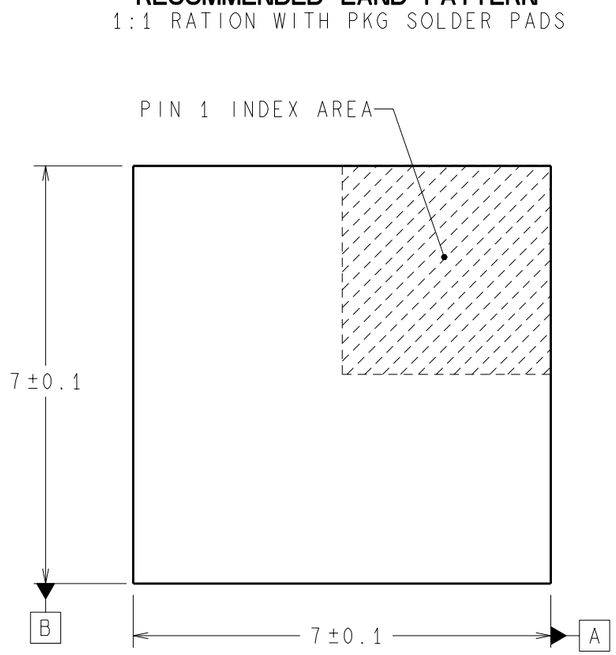

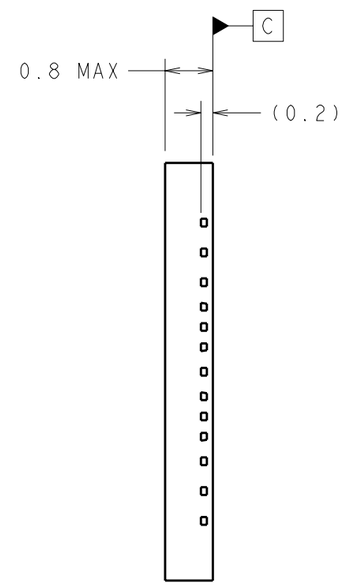

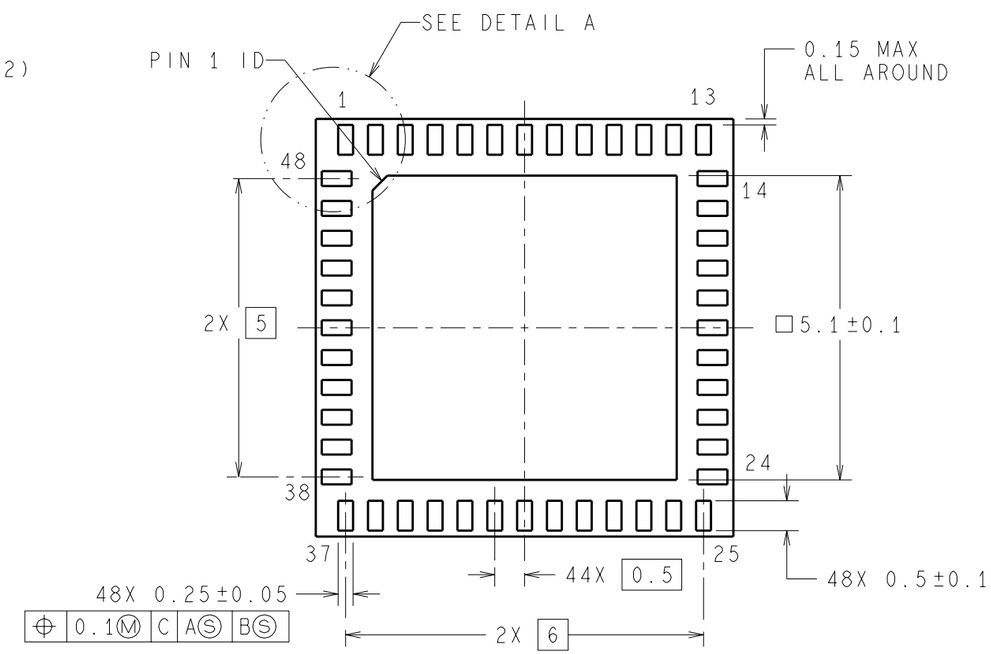

NOTES: UNLESS OTHERWISE SPECIFIED

1. FOR SOLDER THICKNESS AND COMPOSITION, SEE "SOLDER INFORMATION" IN THE PACKAGING SECTION OF THE NATIONAL SEMICONDUCTOR WEB PAGE (www.national.com).

2. NO JEDEC REGISTRATION AS OF MARCH 2003.

APPROVALS	DATE
DRAWN N. SANTHIRAN	03/12/2002
DFTG. CHK. THANH LEQUANG	04/02/2003
ENGR. CHK. RANDALL WALBERG	04/02/2003

PROJECTION MM

National Semiconductor
2900 Semiconductor Dr., Santa Clara, CA 95052-8090

LLP, PLASTIC, QUAD, 7 X 7 X 0.75 mm BODY, 48 LD, 0.5 mm PITCH

SCALE	SIZE	DRAWING NUMBER	REV
NTS	B	(SC)MKT-LQA48B	B

FORMERLY: N/A

SHEET 1 of 1