REVISIONS				
LTR	DESCRIPTION	E.C.N.	DATE	BY/APP'D
A	RELEASE TO DOCUMENT CONTROL	08069	09/06/90	TL/

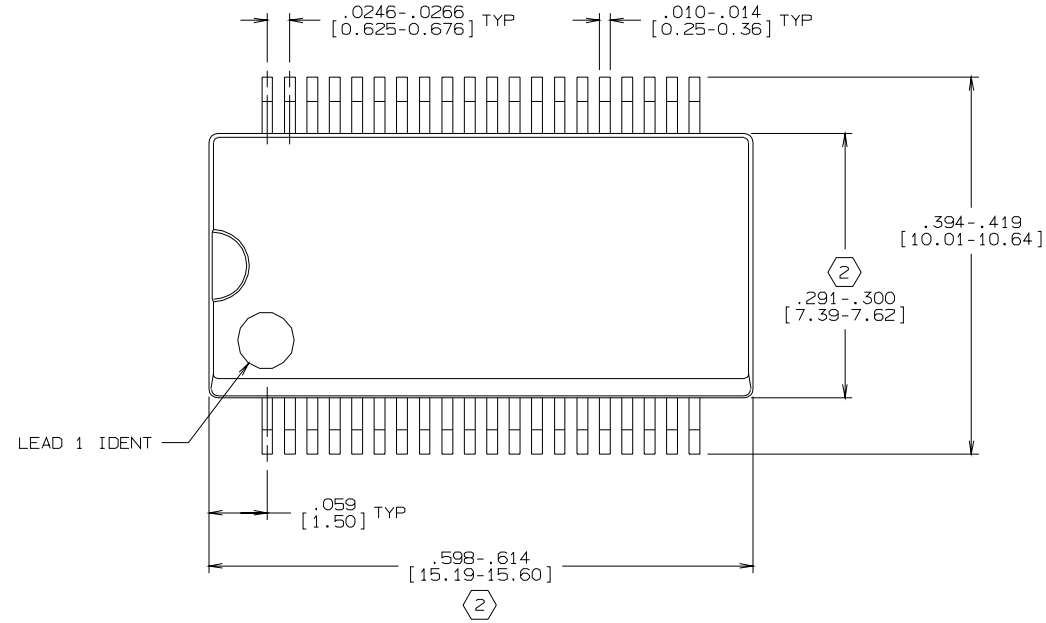

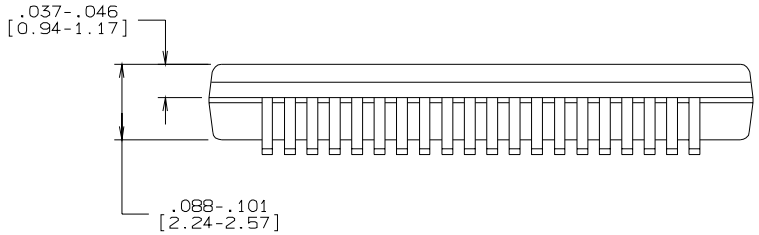

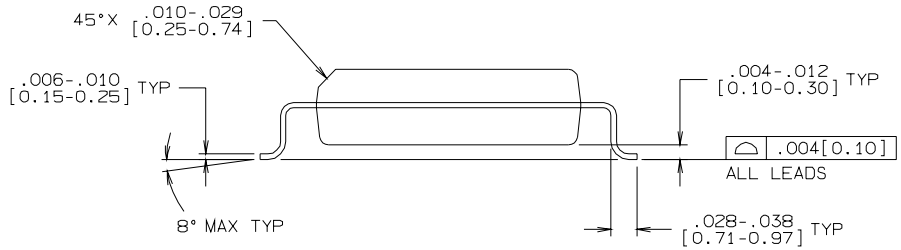

NOTES: UNLESS OTHERWISE SPECIFIED

1. STANDARD LEAD FINISH:
   200 MICROINCHES MINIMUM LEAD/TIN (SOLDER) ON COPPER.

(2) THESE DIMENSIONS DO NOT INCLUDE MOLD FLASH.

CONTROLLING DIMENSION: INCH

APPROVALS	DATE
DRAWN T. LEQUANG	09/06/90
DFTG. CHK.	
ENGR. CHK.	
APPROVAL	

NATIONAL SEMICONDUCTOR CORPORATION
2900 Semiconductor Drive, Santa Clara, CA 95052-8090

MOLDED PACKAGE,
V.S.O.,
.300 WIDE, 40 LEAD

PROJECTION INCH [MM]

SCALE	SIZE	DRAWING NUMBER	REV
N/A	C	MKT-M40A	A

FORMERLY: N/A SHEET 1 OF 1