REVISIONS				
REV	DESCRIPTION	E.C.N.	DATE	BY/APP'D
A	RELEASE TO DOCUMENT CONTROL	11819	09/16/1997	KML/MS/AL
B	LEADSPREAD DIM 1.8-2.4 WAS 2.1±0.1; LAND PATTERN DIST. 1.9 WAS 1.65.)	12055	09/11/1998	NOR/MS/AL
C	UPDATE DWG TO CURRENT STD'S; REVISE NOTE 1; & TITLE; CHANGE TO B SIZE FORMAT.	1015	04/29/2003	MS/RW

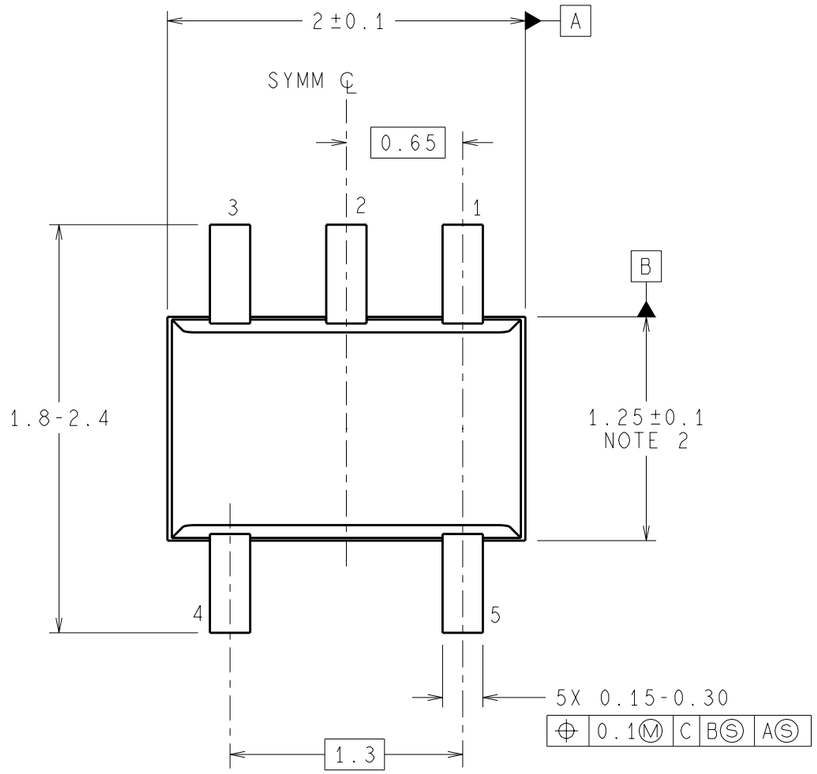

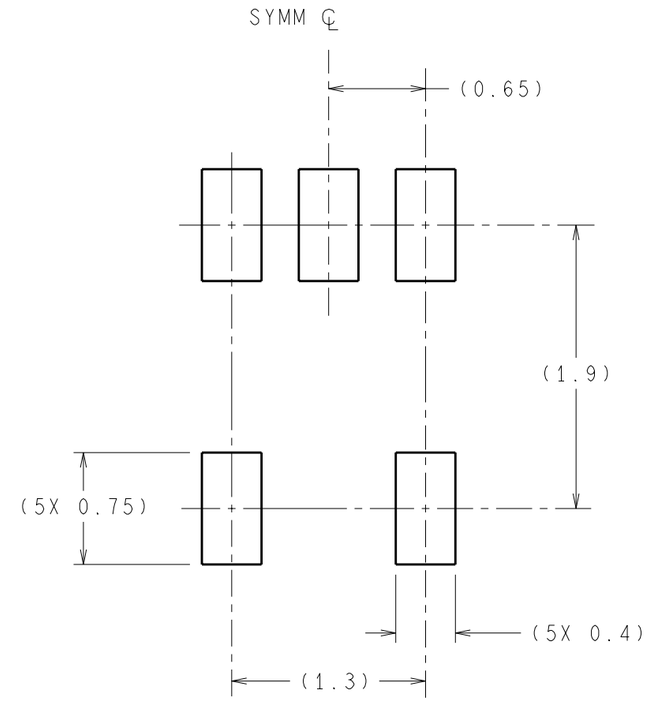

LAND PATTERN RECOMMENDATION

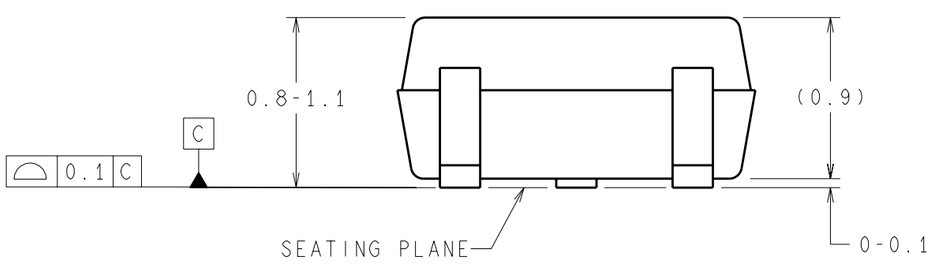

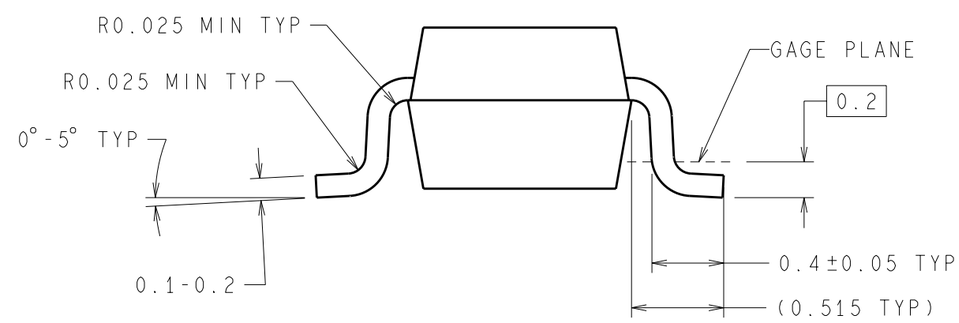

DIMENSIONS ARE IN MILLIMETERS

NOTES: UNLESS OTHERWISE SPECIFIED

1. FOR LEAD FINISH THICKNESS AND COMPOSITION, SEE "SOLDER INFORMATION" IN THE PACKAGING SECTION OF THE NATIONAL SEMICONDUCTOR WEB PAGE (www.national.com).

2. DIMENSION DOES NOT INCLUDE MOLD FLASH.

APPROVALS	DATE
DRAWN K M LOO	09/16/1997
DFTG. CHK. THANH LEQUANG	04/29/2003
ENGR. CHK. RANDALL WALBERG	04/29/2003

PROJECTION MM

National Semiconductor
2900 Semiconductor Dr, Santa Clara, CA 95052-8090

MOLDED SC70, 2x1.25x0.9mm BODY, 5 LD, 0.65mm PITCH

SCALE	SIZE	DRAWING NUMBER	REV
NTS	B	(SC)MKT-MAA05A	C

FORMERLY: N/A

SHEET 1 of 1