REVISIONS				
REV	DESCRIPTION	E.C.N.	DATE	BY/APP'D
A	RELEASE TO DOCUMENT CONTROL	12086	10/28/1998	SN/TL/JJY
B	REVISE NOTE 1; UPDATE NOTE 2; CHANGE DWG FORMAT TO B SIZE	983	04/08/2003	TL/RW

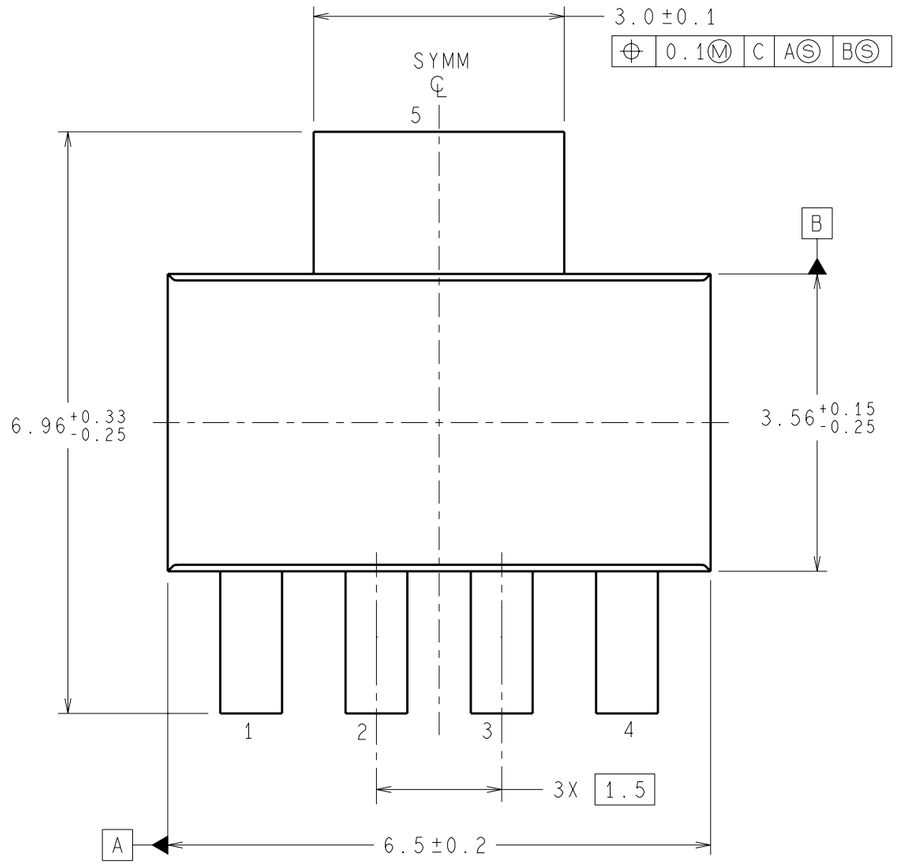

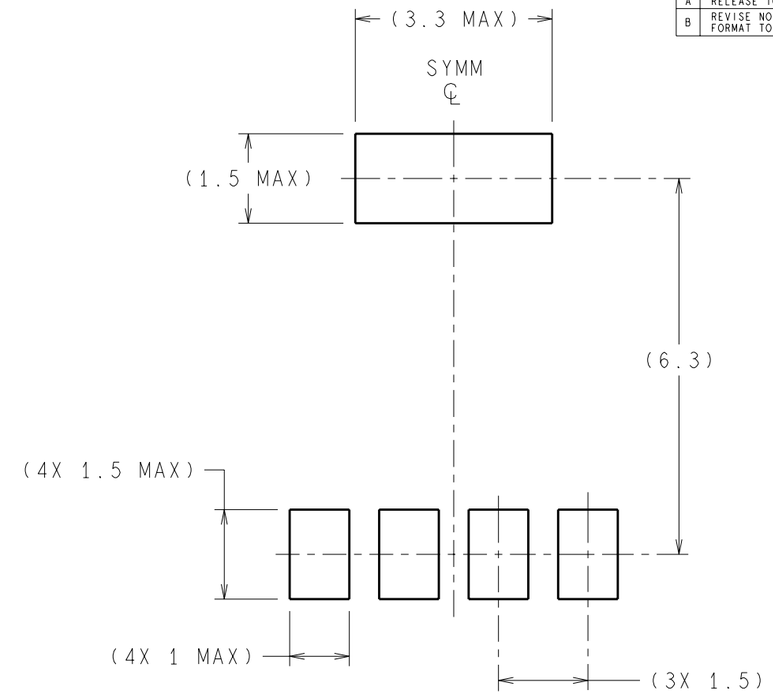

RECOMMENDED LAND PATTERN

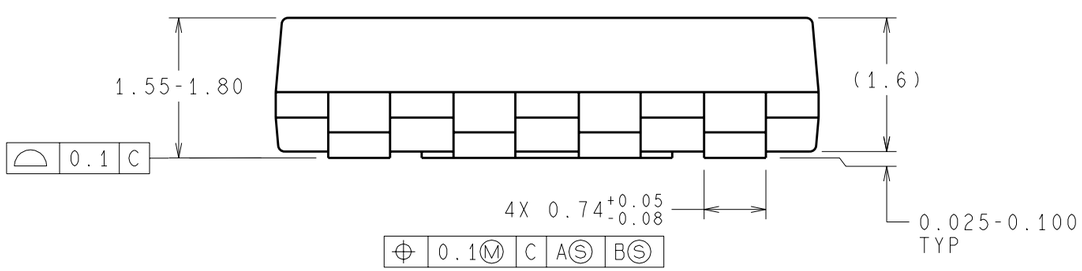

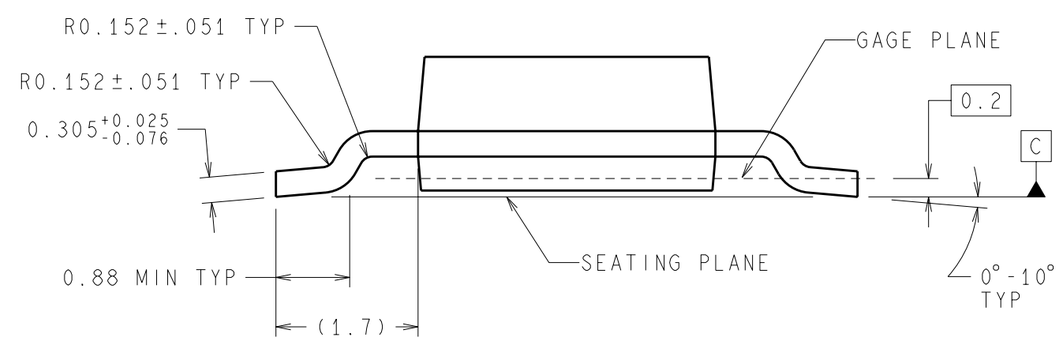

NOTES: UNLESS OTHERWISE SPECIFIED

1. FOR LEAD FINISH THICKNESS AND COMPOSITION, SEE "SOLDER INFORMATION" IN THE PACKAGING SECTION OF THE NATIONAL SEMICONDUCTOR WEB PAGE (www.national.com).
2. REFERENCE JEDEC REGISTRATION TO-261, VARIATION AB.

DIMENSIONS ARE IN MILLIMETERS

APPROVALS	DATE
DRAWN N.SANTHIRAN	10/28/1998
DFTG. CHK. MARTA SUCHY	04/08/2003
ENGR. CHK. RANDALL WALBERG	04/08/2003

PROJECTION MM

National Semiconductor
2900 Semiconductor Dr., Santa Clara, CA 95052-8090

MOLDED SOT-223, 6.50x3.56x1.6mm BODY, 5 LEAD, 1.5mm PITCH

SCALE	SIZE	DRAWING NUMBER	REV
NTS	B	(SC)MKT-MA05C	B

FORMERLY: N/A

SHEET 1 of 1