REVISIONS				
REV	DESCRIPTION	E.C.N.	DATE	BY/APP'D
A	RELEASE TO DOCUMENT CONTROL	12345	01/13/2000	TL/RW
B	REVISE NOTE 1; UPDATE NOTE 2; CHANGE DWG FORMAT TO B SIZE	983	04/07/2003	TL/RW

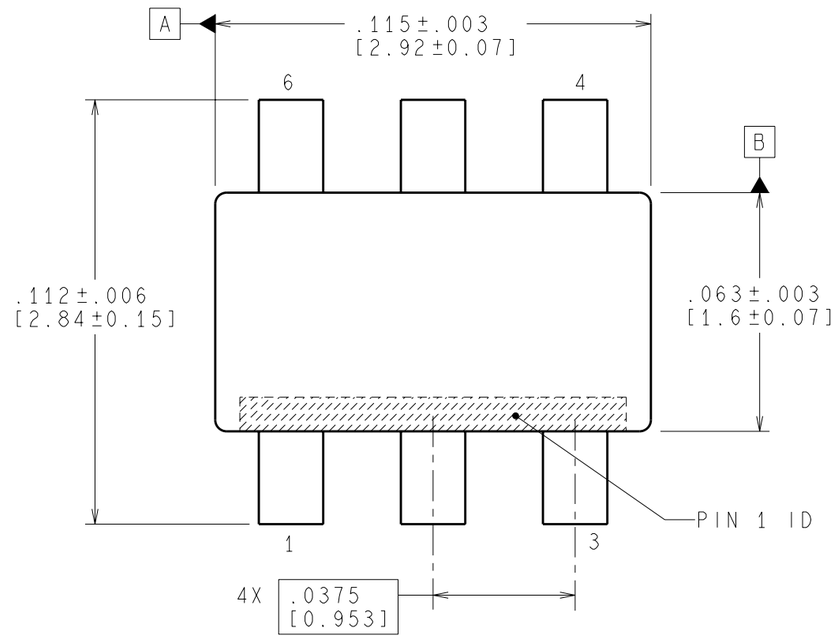

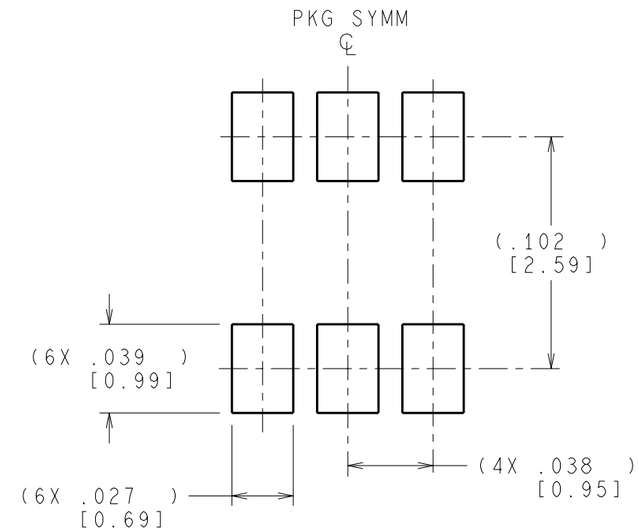

RECOMMENDED LAND PATTERN

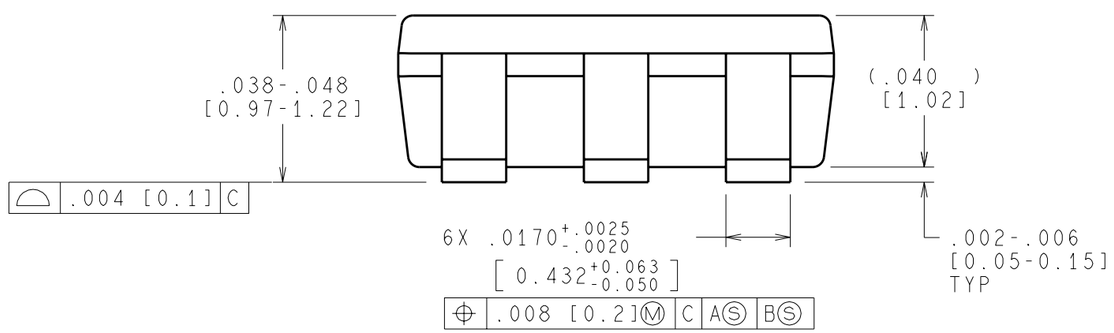

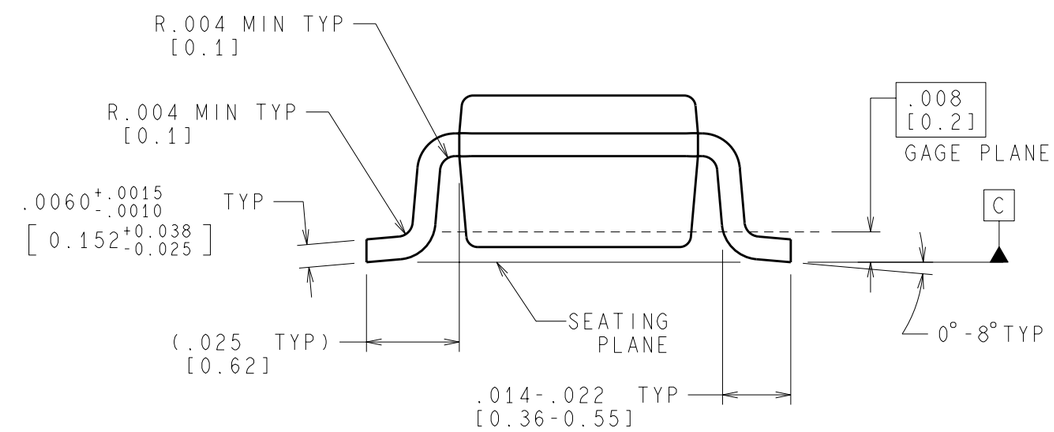

CONTROLLING DIMENSION IS INCH
VALUES IN [ ] ARE MILLIMETERS

NOTES: UNLESS OTHERWISE SPECIFIED

1. FOR LEAD FINISH THICKNESS AND COMPOSITION, SEE "SOLDER INFORMATION" IN THE PACKAGING SECTION OF THE NATIONAL SEMICONDUCTOR WEB PAGE (www.national.com).

2. REFERENCE JEDEC REGISTRATION MO-178, VARIATION AB.

APPROVALS	DATE
DRAWN T. LEQUANG	01/13/2000
DFTG. CHK. MARTA SUCHY	04/07/2003
ENGR. CHK. RANDY WALBERG	04/07/2003

PROJECTION INCH [MM]

National Semiconductor
2900 Semiconductor Dr, Santa Clara, CA 95052-8090

MOLDED SOT-23, .115x.063x.040 in BODY, 6 LD, .0375 in PITCH

SCALE	SIZE	DRAWING NUMBER	REV
NTS	B	(SC)MKT-MF06A	B

FORMERLY: N/A

SHEET 1 of 1