REVISIONS				
REV	DESCRIPTION	E.C.N.	DATE	BY/APP'D
A	RELEASE TO DOCUMENT CONTROL	12365	01/12/2000	MS/RW
B	REVISE NOTE 1; UPDATE NOTE 2; CHANGE DWG FORMAT TO B SIZE	983	04/07/2003	TL/RW

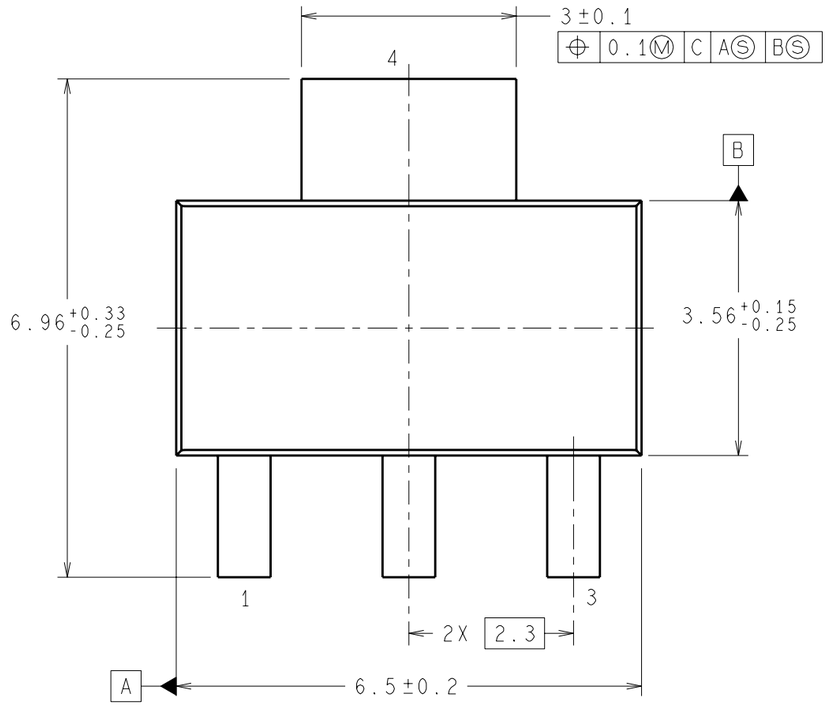

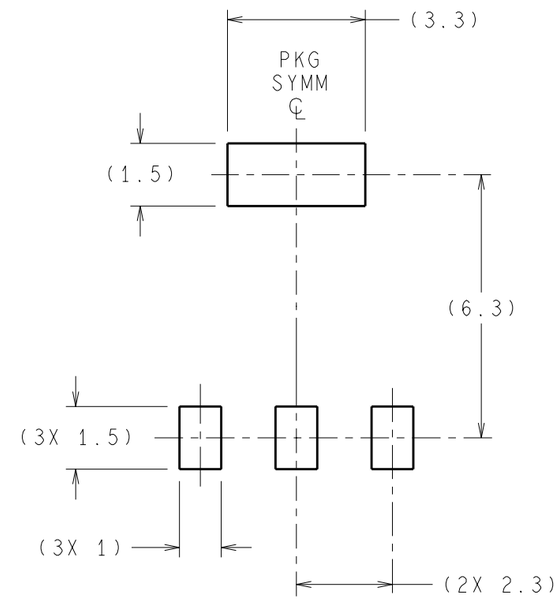

LAND PATTERN RECOMMENDATION

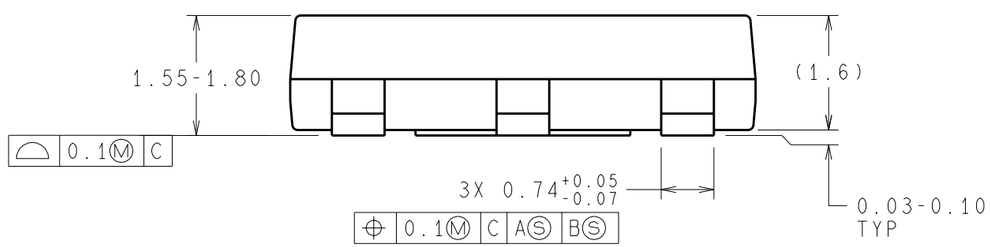

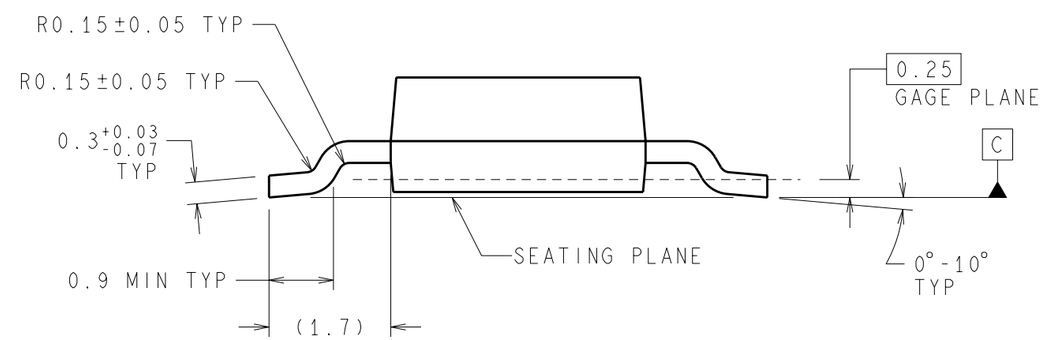

DIMENSIONS ARE IN MILLIMETERS

NOTES: UNLESS OTHERWISE SPECIFIED

1. FOR LEAD FINISH THICKNESS AND COMPOSITION, SEE "SOLDER INFORMATION" IN THE PACKAGING SECTION OF THE NATIONAL SEMICONDUCTOR WEB PAGE (www.national.com).

2. REFERENCE JEDEC REGISTRATION TO-261, VARIATION AA.

APPROVALS	DATE
DRAWN MARTA SUCHY	01/12/2000
DFTG. CHK. MARTA SUCHY	04/07/2003
ENGR. CHK. RANDALL WALBERG	04/07/2003

PROJECTION MM

National Semiconductor
2900 Semiconductor Dr., Santa Clara, CA 95052-8090

MOLDED SOT-223, 6.5 x 3.56 x 1.6mm BODY, 4 LD, 2.3mm PITCH

SCALE	SIZE	DRAWING NUMBER	REV
NTS	B	(SC)MKT-MP04A	B

FORMERLY: N/A

SHEET 1 of 1