REVISIONS				
REV	DESCRIPTION	E.C.N.	DATE	BY/APP'D
A	RELEASE TO DOCUMENT CONTROL	09307	09/01/1992	MS/CC
B	REVISE & REDRAW PER SUPPLIER PART & JEDEC	642	08/01/2002	TL/RW
C	LEAD POS. TOL. 0.12 WAS 0.15	877	11/15/2002	MS/RW

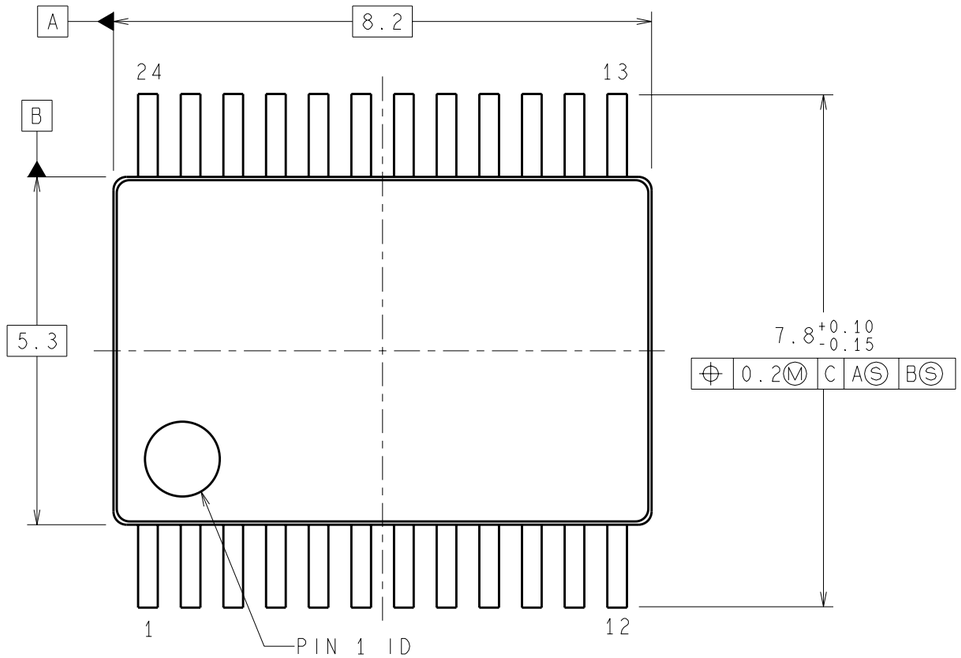

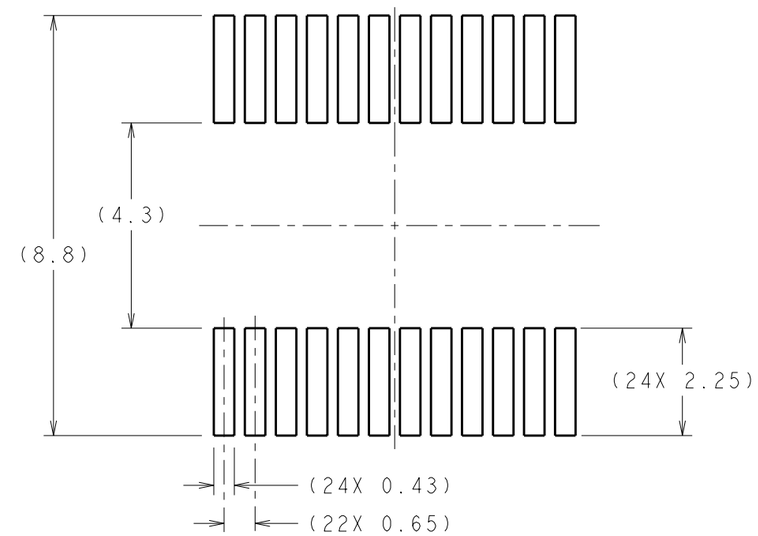

RECOMMENDED LAND PATTERN

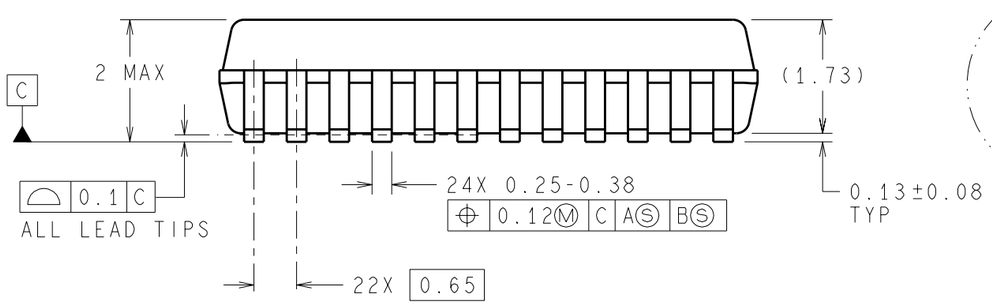

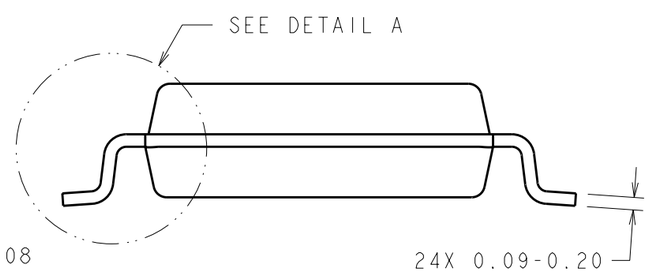

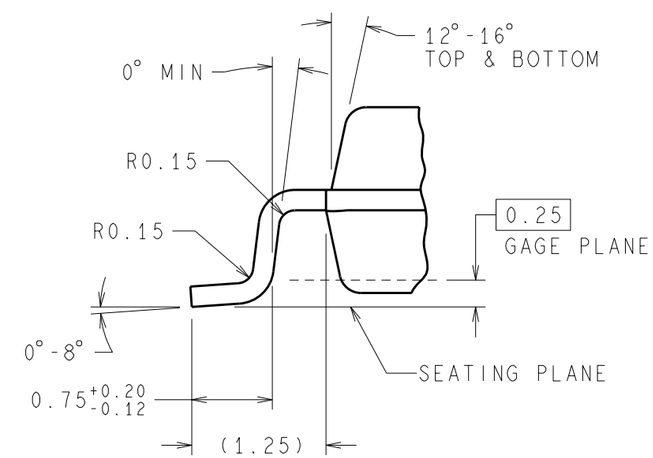

DETAIL A
TYP, SCALE:18X

DIMENSIONS ARE IN MILLIMETERS

NOTES: UNLESS OTHERWISE SPECIFIED

1. REFERENCE JEDEC REGISTRATION MO-150, VARIATION AG.

APPROVALS	DATE
DRAWN T. LEQUANG	08/01/2002
DFTG. CHK. THANH LEQUANG	11/15/2002
ENGR. CHK. RANDY WALBERG	11/15/2002

PROJECTION MM

National Semiconductor
2900 Semiconductor Dr, Santa Clara, CA 95052-8090

MOLDED SSOP,
8.2 X 5.3mm BODY,
24 LEAD, 0.65mm PITCH

SCALE	SIZE	DRAWING NUMBER	REV
NTS	B	(SC)MKT-MSA24	C

FORMERLY: N/A

SHEET 1 of 1