REVISIONS				
LTR	DESCRIPTION	E.C.N.	DATE	BY/APP'D
D	REVISE & REDRAW ON PRO/E PER CURRENT STD; CORRECT DET CALLOUT FROM D TO A.	11105	08/29/1995	MS/TC
E	LD POS. TOL 0.1 WAS 0.13; ADD LD FINISH NOTE; REVISE JEDEC NOTE; CHANGE TO B SIZE FORMAT.	932	03/05/2003	MS/RW

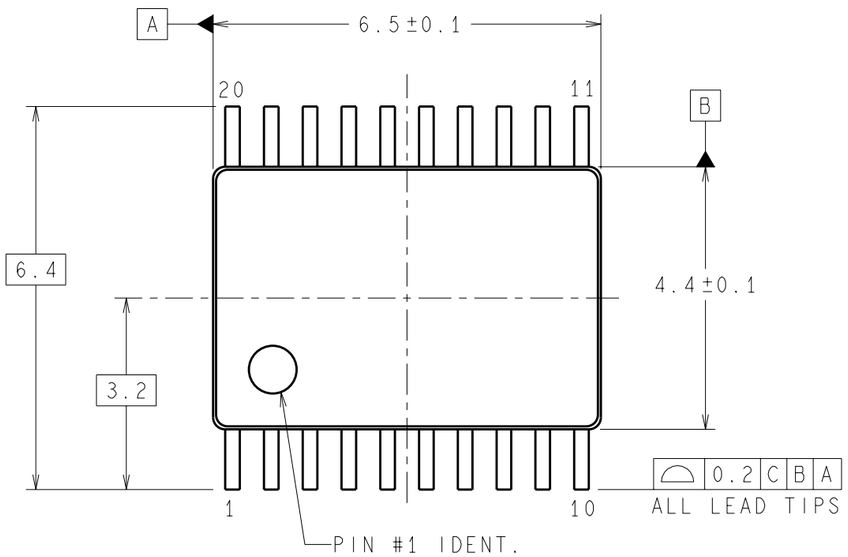

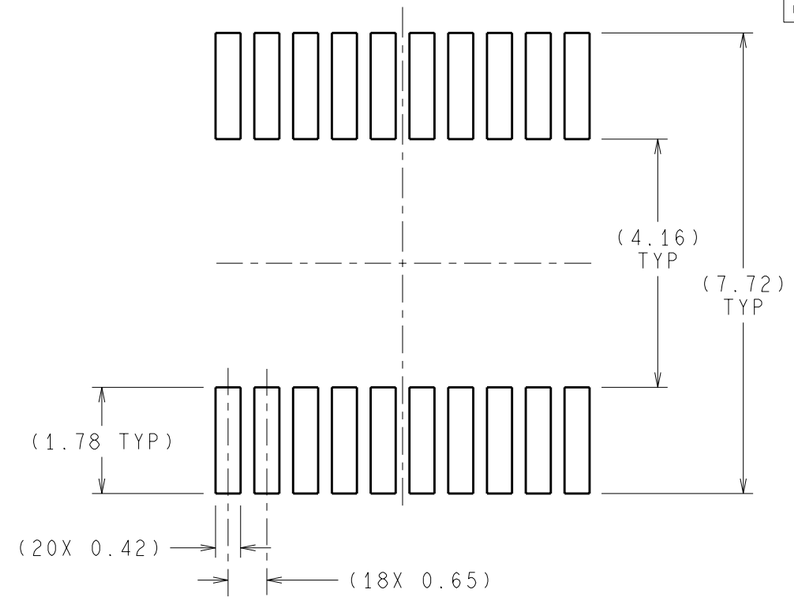

LAND PATTERN RECOMENDATION

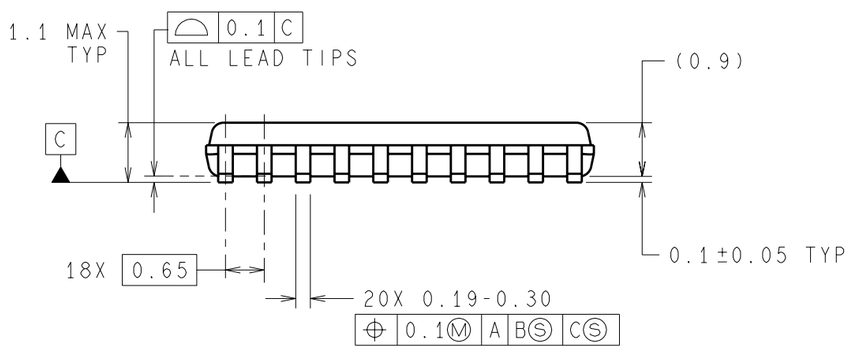

DIMENSIONS ARE IN MILLIMETERS

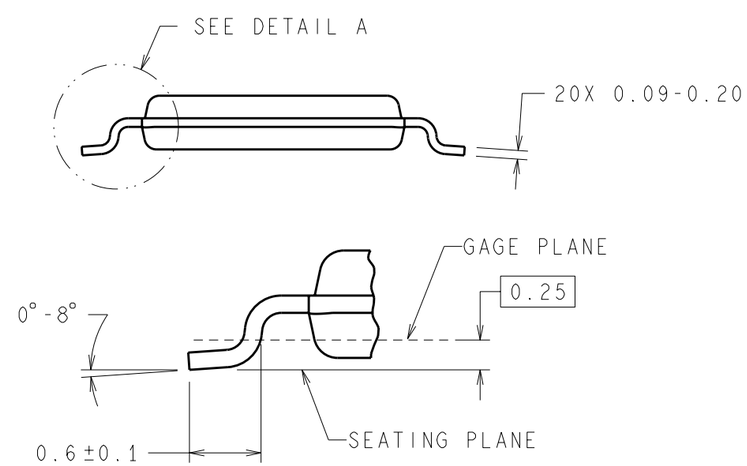

DETAIL A
TYPICAL, SCALE:20X

NOTES: UNLESS OTHERWISE SPECIFIED

1. FOR LEAD FINISH THICKNESS AND COMPOSITION, SEE "SOLDER INFORMATION" IN THE PACKAGING SECTION OF THE NATIONAL SEMICONDUCTOR WEB PAGE (www.national.com)
2. REFERENCE JEDEC REGISTRATION MO-153, VARIATION AC.

APPROVALS	DATE
DRAWN MARTA SUCHY	08/29/1995
DFTG. CHK. THANH LEQUANG	03/05/2003
ENGR. CHK. RANDALL WALBERG	03/05/2003

PROJECTION MM

National Semiconductor
2900 Semiconductor Dr., Santa Clara, CA 95052-8090

MOLDED TSSOP, JEDEC, 6.5x4.4x0.9mm BODY, 20 LD, 0.65mm PITCH

SCALE	SIZE	DRAWING NUMBER	REV
NTS	B	(SC)MKT-MTC20	E

FORMERLY: N/A

SHEET 1 of 1