REVISIONS				
REV	DESCRIPTION	E.C.N.	DATE	BY/APP'D
A	RELEASE TO DOCUMENT CONTROL	1007	04/25/2003	TL/AT

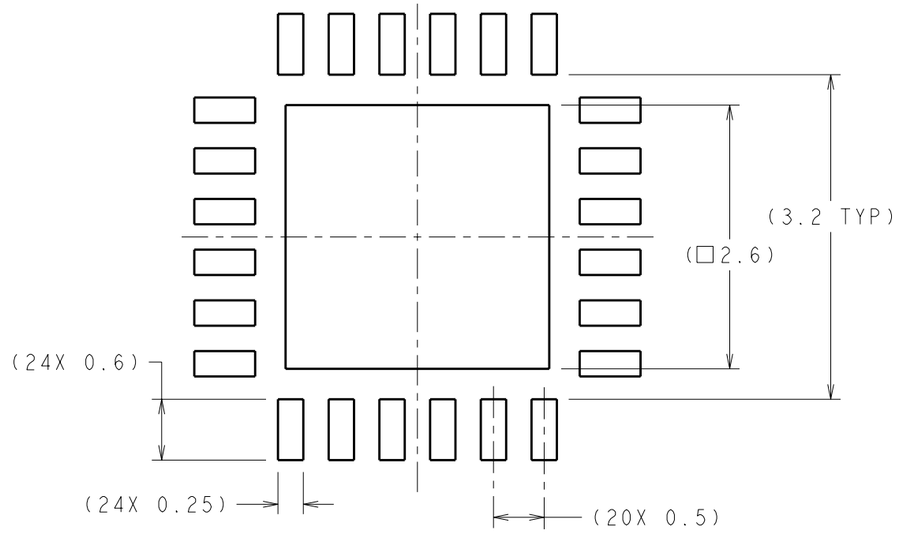

RECOMMENDED LAND PATTERN

DIMENSIONS ARE IN MILLIMETERS

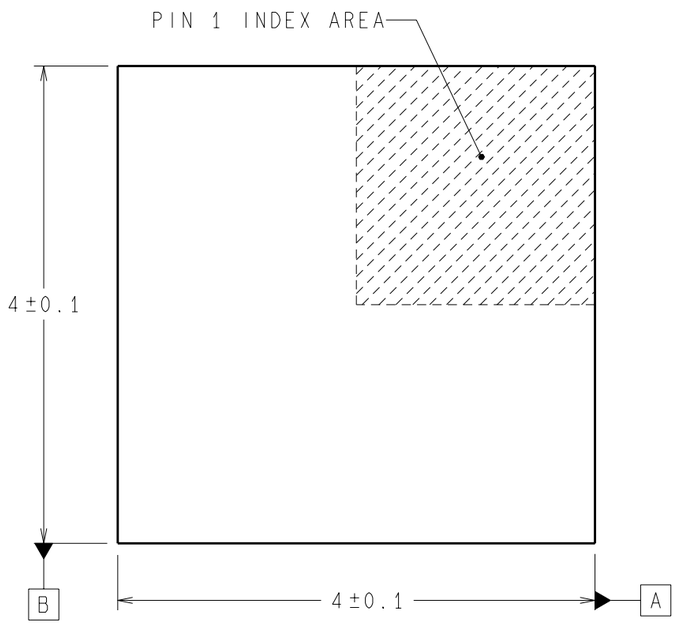

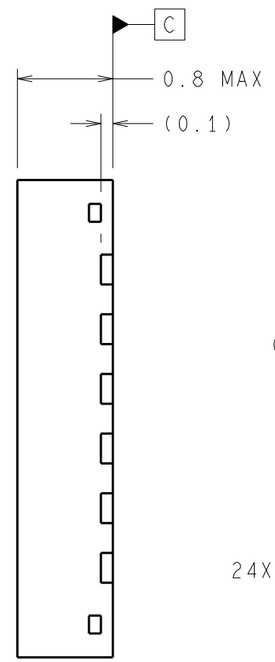

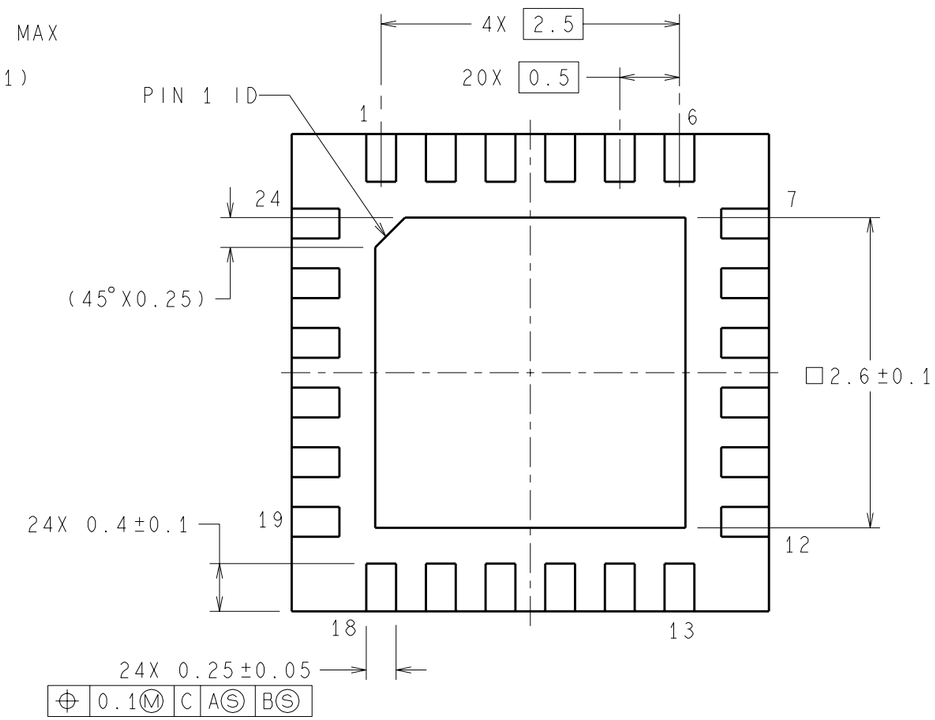

NOTES: UNLESS OTHERWISE SPECIFIED

1. FOR SOLDER THICKNESS AND COMPOSITION, SEE "SOLDER INFORMATION" IN THE PACKAGING SECTION OF THE NATIONAL SEMICONDUCTOR WEB PAGE (www.national.com).

2. NO JEDEC REGISTRATION AS OF APRIL 2003.

APPROVALS	DATE
DRAWN T. LEQUANG	04/17/2003
DFTG. CHK. MARTA SUCHY	04/25/2003
ENGR. CHK. ANNY TU	04/25/2003

PROJECTION MM

National Semiconductor
2900 Semiconductor Dr, Santa Clara, CA 95052-8090

LLP, PLASTIC, QUAD, 4x4x0.8mm BODY, 24 LD, 0.5mm PITCH, EXT LD

SCALE	SIZE	DRAWING NUMBER	REV
NTS	B	(SC)MKT-SQA24A	A

FORMERLY: X-01939 SHEET 1 of 1