THIS DRAWING IS THE PROPERTY OF NATIONAL SEMICONDUCTOR CORPORATION. NO USE THEREOF SHALL BE MADE OTHER THAN AS A REFERENCE FOR PROPOSALS AS SUBMITTED TO NATIONAL SEMICONDUCTOR CORPORATION FOR JOBS TO BE EXECUTED IN CONFORMITY WITH SUCH PROPOSALS UNLESS THE CONSENT OF SAID NATIONAL SEMICONDUCTOR CORPORATION HAS PREVIOUSLY BEEN OBTAINED. NO PART OF THIS DRAWING SHALL BE COPIED OR DUPLICATED OR ITS CONTENTS DISCLOSED. THE INFORMATION CONTAINED ON THIS DRAWING IS CONFIDENTIAL AND PROPRIETARY.

REVISIONS

LTR	DESCRIPTION	E.C.N.	DATE	BY/APP'D
A	RELEASE TO DOCUMENT CONTROL	07514	10/06/89	PG/GSRel

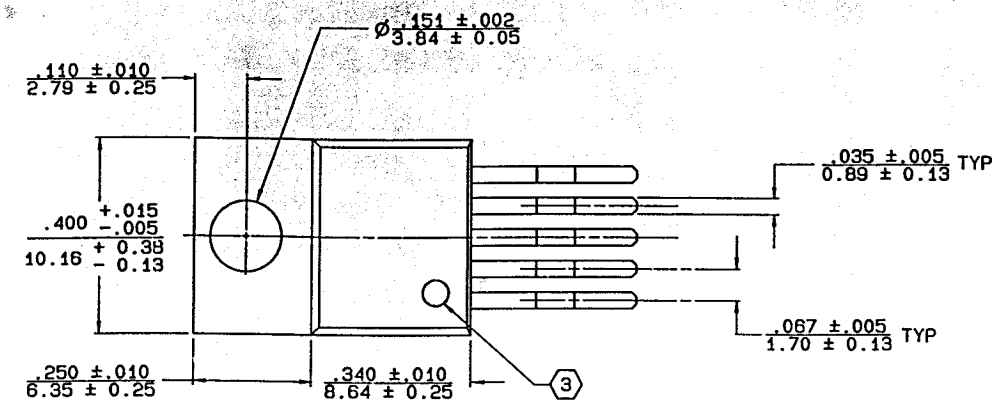

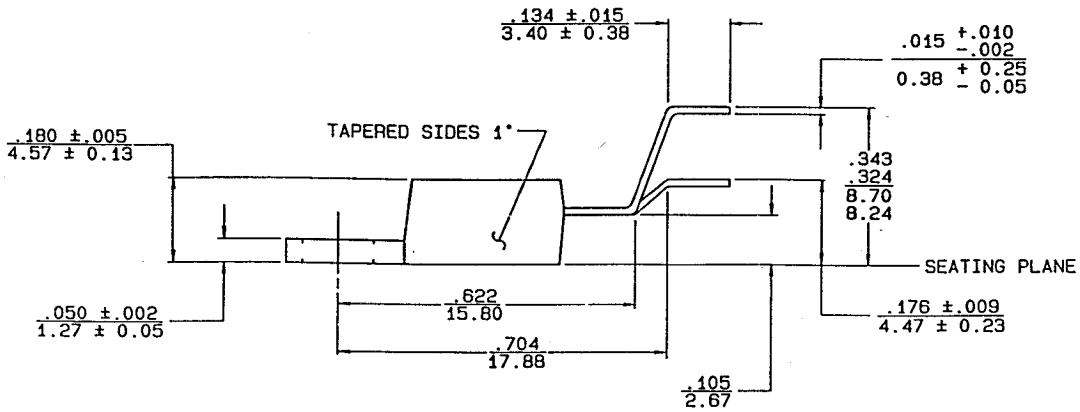

NOTES: UNLESS OTHERWISE SPECIFIED

1. MOLDED CORNERS SHOWN SHARP R.031/0.79 MAXIMUM.
2. STANDARD LEAD FINISH:
   200 MICROINCHES/5.08 MICROMETERS MINIMUM LEAD TIN 37/63 ON OLIN 194 OR EQUIVALENT.

(3) PIN 1 IDENTIFICATION MARK: Ø .055 X .015/1.40 X 0.38 DEEP MAXIMUM.

APPROVALS	DATE
DRAWN Amela Gifford	10/06/89
DFTG. CHK. Maria Miley	10/13/89
ENGR. CHK. Co. S. Vech	10/13/89
APPROVAL	/ /

PROJECTION INCH MM

NATIONAL SEMICONDUCTOR CORPORATION
2900 Semiconductor Drive, Santa Clara, CA 95052-8090

TO-220, MOLDED, STAGGER BEND, 5 LEAD

SCALE	SIZE	DRAWING NUMBER	REV
N/A	C	MKT-T05D	A

DO NOT SCALE DRAWING — SHEET 1 OF 1