REVISIONS				
LTR	DESCRIPTION	E.C.N.	DATE	BY/APP'D
A	RELEASE TO DOCUMENT CONTROL	10772	01/24/95	MS/KHT
B	ADD DOTTED LINES TO FRONT VIEW FOR THRU HOLE; UPDATE CONTROLLING DIM NOTE.	10851	02/27/95	MS/

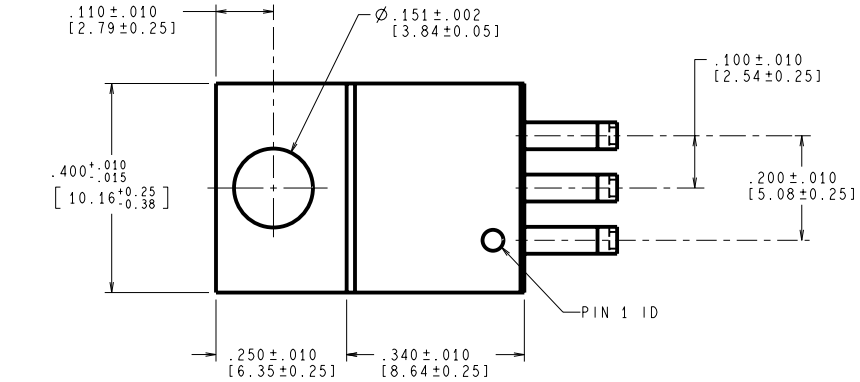

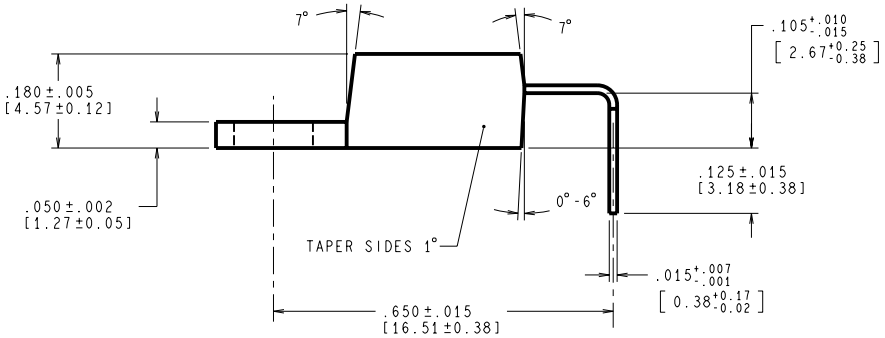

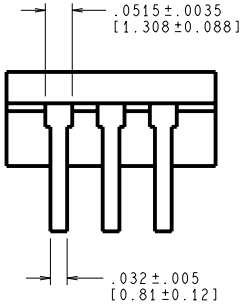

CONTROLLING DIMENSION IS INCH
VALUES IN [ ] ARE MILLIMETERS

NOTES: UNLESS OTHERWISE SPECIFIED

1. STANDARD LEAD FINISH:
   200 MICROINCHES/ 5.08 MICROMETERS MINIMUM LEAD/TIN 15/85 ON COPPER OLIN 194 OR EQUIVALENT.
2. DIMENSIONS BASED ON JEDEC STANDARD TO-220, VARIATION AB, ISSUE J, DATED 03/24/87.

APPROVALS	DATE
DRAWN MARTA SUCHY	01/24/95
DFTG. CHK.	
ENGR. CHK.	

National Semiconductor
2900 Semiconductor dr, Santa Clara, CA 95052-8090

TO-220, MOLDED, 3 LEAD, 90 DEG INLINE

PROJECTION INCH [MM]

SCALE	SIZE	DRAWING NUMBER	REV
N/A	C	MKT-TA03H	B

DO NOT SCALE DRAWING | SHEET 1 of 1