REVISIONS				
REV	DESCRIPTION	E.C.N.	DATE	BY/APP'D
A	RELEASE TO DOCUMENT CONTROL	869	10/10/2002	SN/TL/JL
B	LONG AND SHORT PINS INTERCHANGE, REVISE NOTE 1 & 2	934	04/22/2003	TT/MS/JL

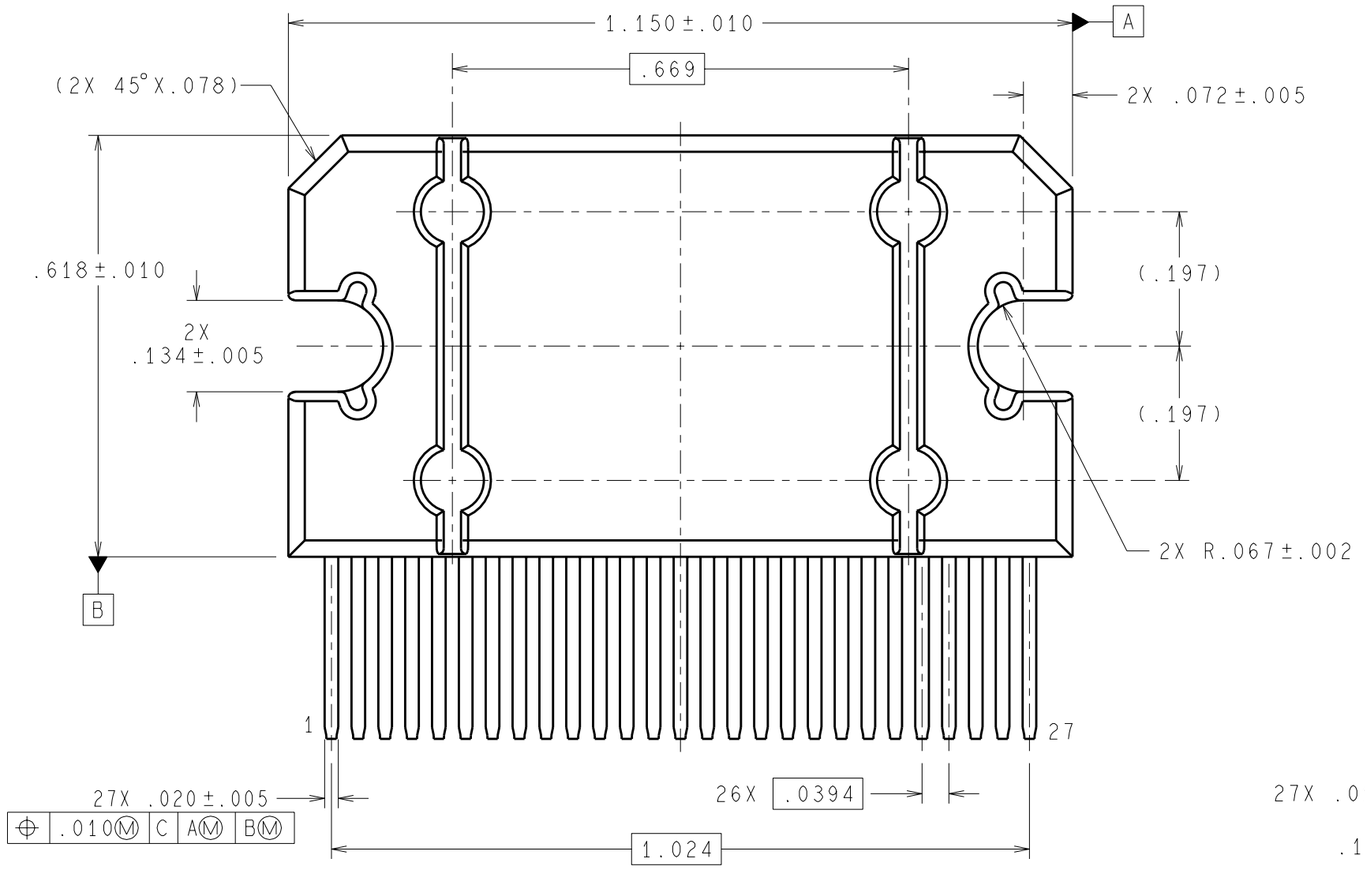

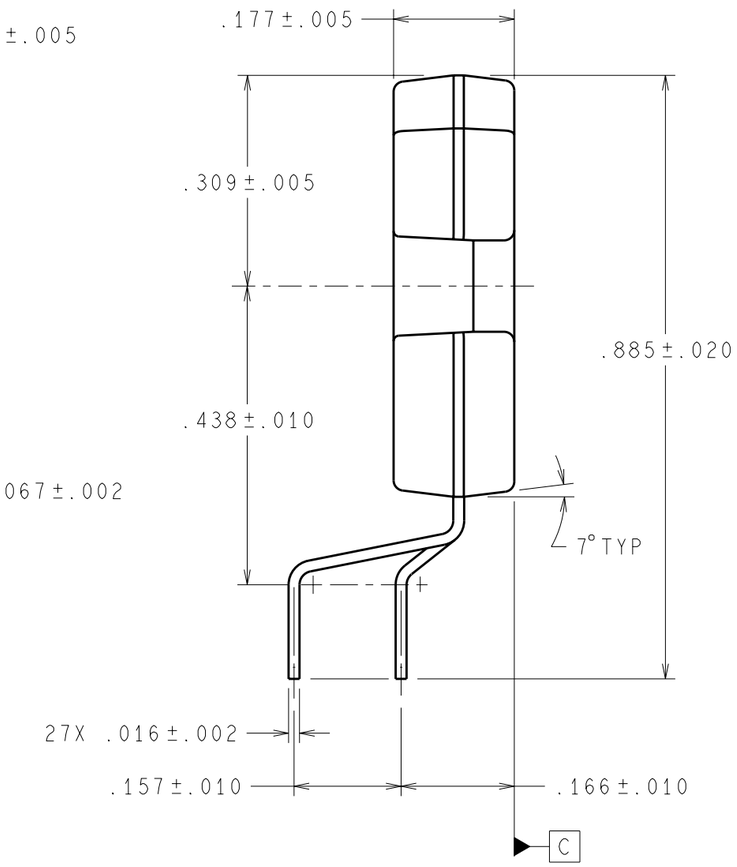

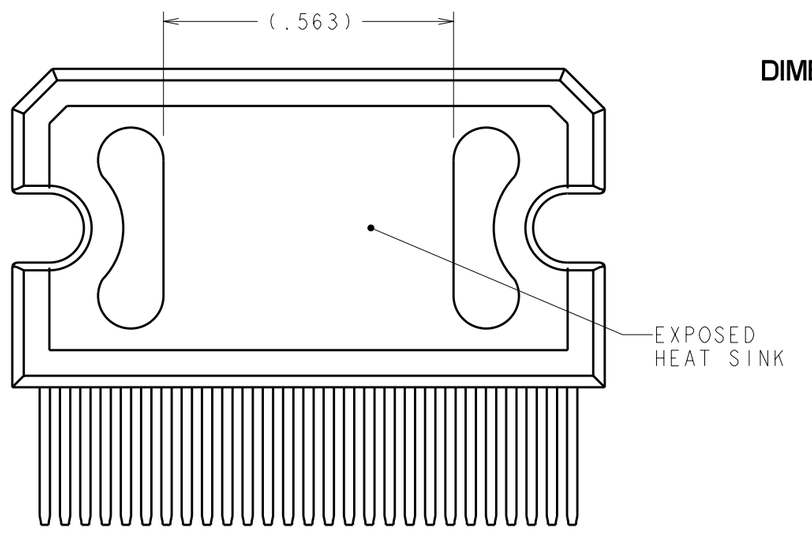

BACK VIEW

DIMENSIONS ARE IN INCHES

NOTES: UNLESS OTHERWISE SPECIFIED.

1. FOR LEAD FINISH THICKNESS AND COMPOSITION, SEE "SOLDER INFORMATION" IN THE PACKAGING SECTION OF THE NATIONAL SEMICONDUCTOR WEB PAGE (www.national.com).
2. NO JEDEC REGISTRATION AS OF APRIL 2003.

APPROVALS	DATE
DRAWN N.SANTHIRAN	09/25/2002
DFTG. CHK. MARTA SUCHY	04/22/2003
ENGR. CHK. JL CHIA	04/22/2003

PROJECTION INCH

National Semiconductor
2900 Semiconductor Dr, Santa Clara, CA 95052-8090

TO-220, MOLDED, 1.150x.618x.177 BODY, 27 LEAD, .040 PITCH

SCALE	SIZE	DRAWING NUMBER	REV
NTS	B	(SC)MKT-TA27A	B

FORMERLY: N/A

SHEET 1 of 1