REVISIONS				
LTR	DESCRIPTION	E.C.N.	DATE	BY/APP'D
A	RELEASE TO DOCUMENT CONTROL	09920	07/23/93	MS/DM
B	.783-.793 WAS .778-.798; .014-.017 WAS .013-.017; REVISE NOTE 2.	10298	02/23/94	MS/

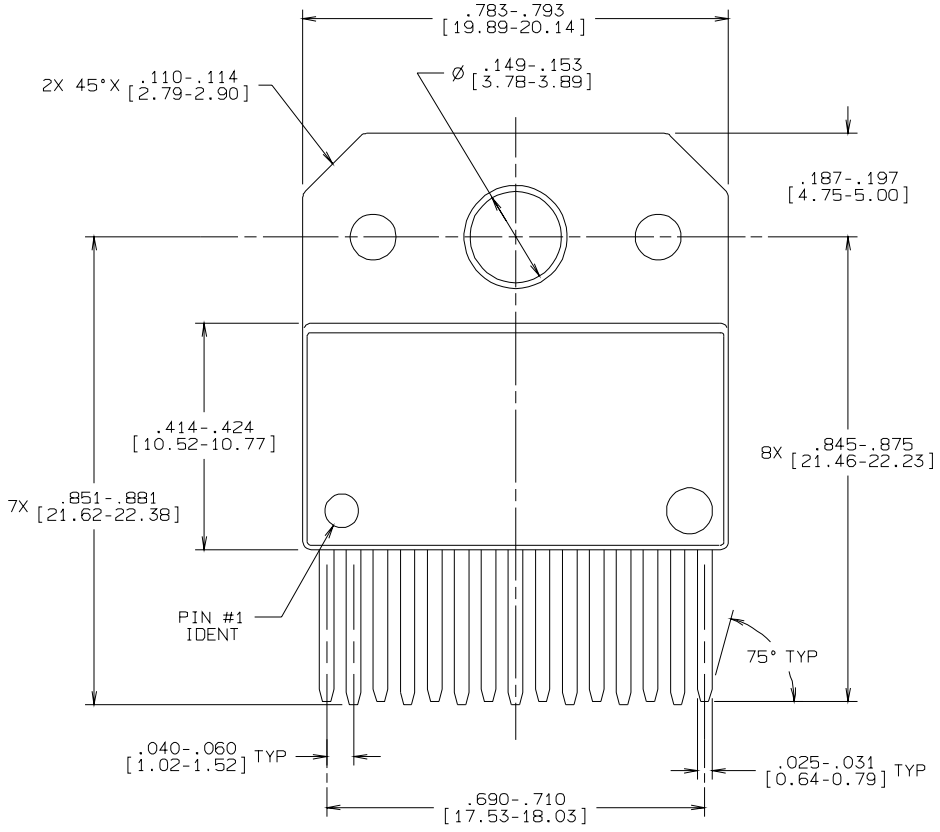

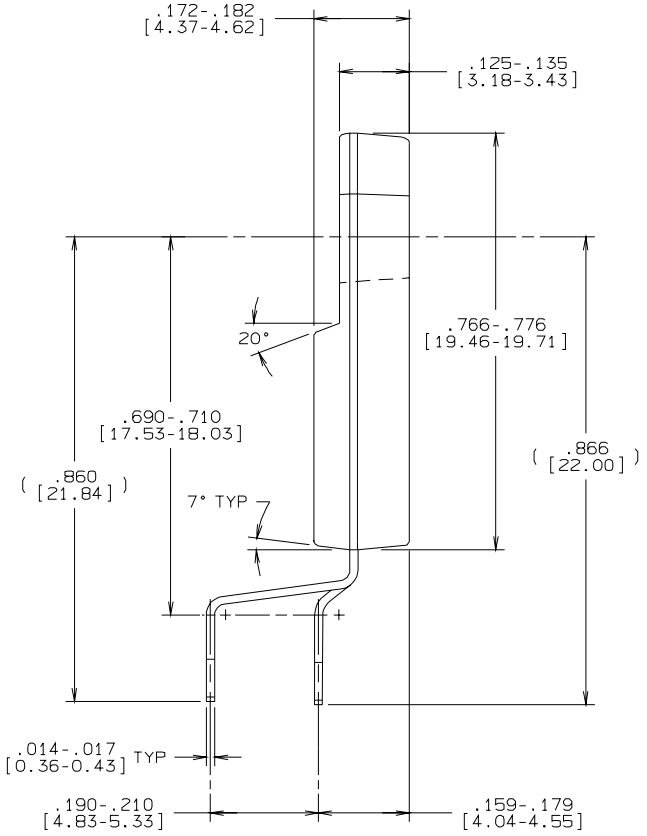

CONTROLLING DIMENSION: INCH

NOTES: UNLESS OTHERWISE SPECIFIED

1. STANDARD LEAD FINISH:
   200 MICROINCHES/ 5.08 MICROMETERS
   MINIMUM LEAD/ TIN (SOLDER) ON COPPER.

2. REFERENCE JEDEC REGISTRATION MO-168,
   VARIATION AB, DATED JAN,94.

APPROVALS	DATE
DRAWN MARTA SUCHY	07/23/93
DFTG. CHK.	
ENGR. CHK.	
APPROVAL	

PROJECTION INCH [MM]

NATIONAL SEMICONDUCTOR CORPORATION
2900 Semiconductor Drive, Santa Clara, CA 95052-8090

TO-220, MOLDED,
15 LEAD, STAGGER,
ISOLATED

SCALE	SIZE	DRAWING NUMBER	REV
N/A	C	MKT-TF15B	B

DO NOT SCALE DRAWING — SHEET 1 OF 1