REVISIONS				
LTR	DESCRIPTION	E.C.N.	DATE	BY/APP'D
A	RELEASE TO DOCUMENT CONTROL	434	10/04/2001	MS/AP

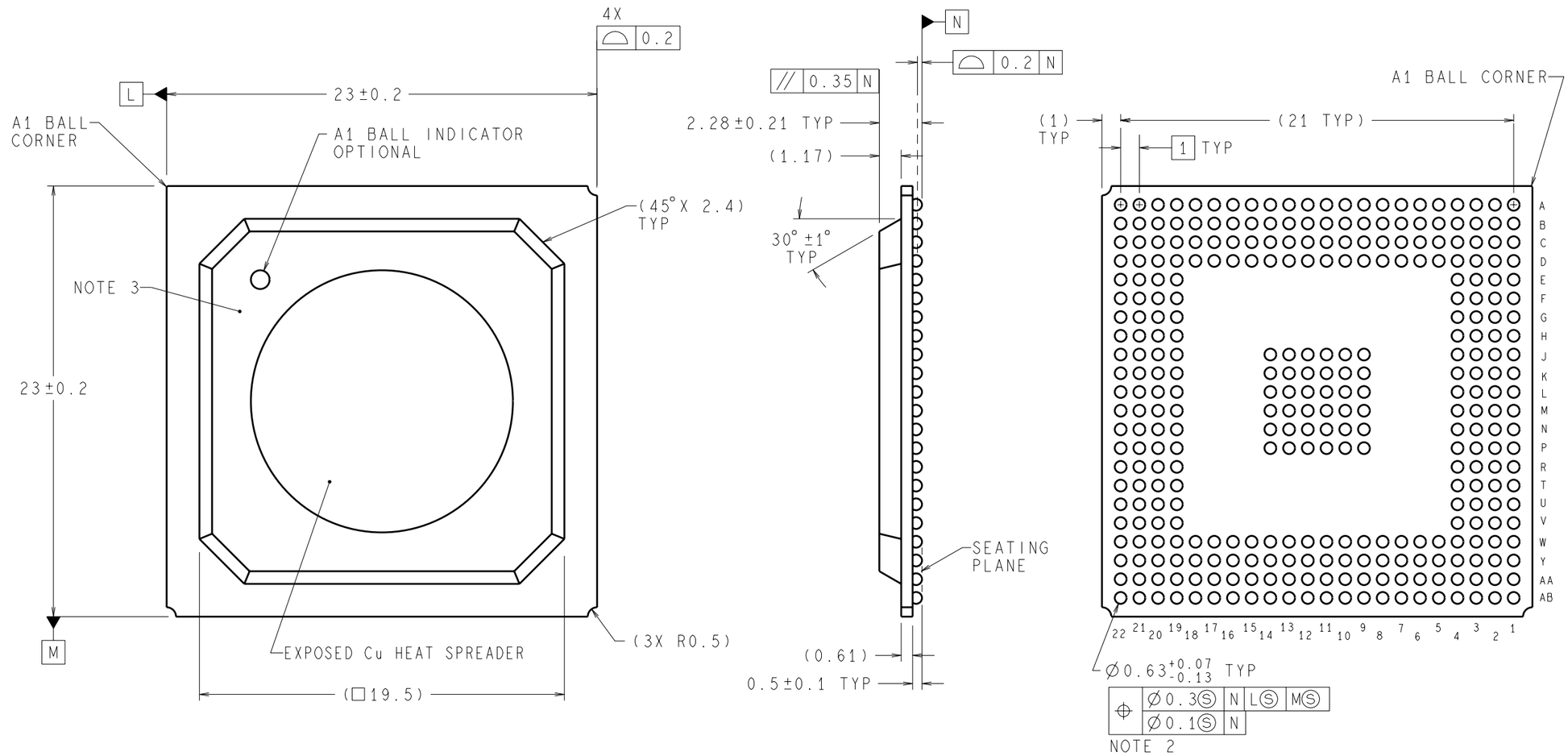

DIMENSIONS ARE IN MILLIMETERS

NOTES: UNLESS OTHERWISE SPECIFIED

1. SOLDER BALL COMPOSITION: Sn 63%,Pb 37%.
2. DIMENSION IS MEASURED AT THE MAXIMUM SOLDER BALL DIAMETER, PARALLEL TO PRIMARY DATUM N.
3. THE MOLD SURFACE AREA MAY INCLUDE DIMPLE FOR A1 BALL CORNER IDENTIFICATION.
4. REFERENCE JEDEC REGISTRATION MS-034, VARIATION AAJ-1.

APPROVALS	DATE
DRAWN MARTA SUCHY	10/04/2001
DFTG. CHK. THANH LEQUANG	10/04/2001
ENGR. CHK. ANINDYA PODDAR	10/04/2001

PROJECTION INCH [MM]

National Semiconductor
2900 Semiconductor Dr, Santa Clara, CA 95052-8090

TE-PBGA,
23 X 23 X 2.28mm,
324 BALL, 1.0mm PITCH

SCALE	SIZE	DRAWING NUMBER	REV
N/A	C	(SC)MKT-UFJ324A	A

DO NOT SCALE DRAWING | SHEET 1 of 1