REVISIONS				
REV	DESCRIPTION	E.C.N.	DATE	BY/APP'D
A	RELEASE TO DOCUMENT CONTROL	886	03/14/2003	MS/RW

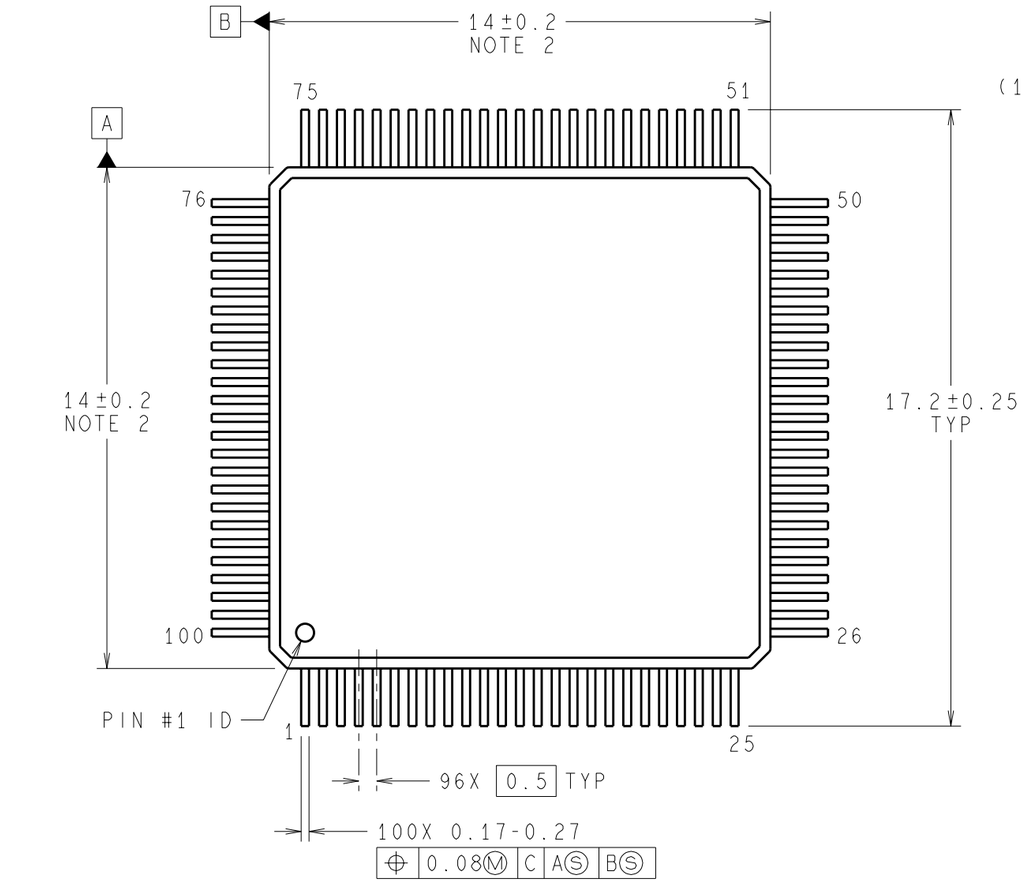

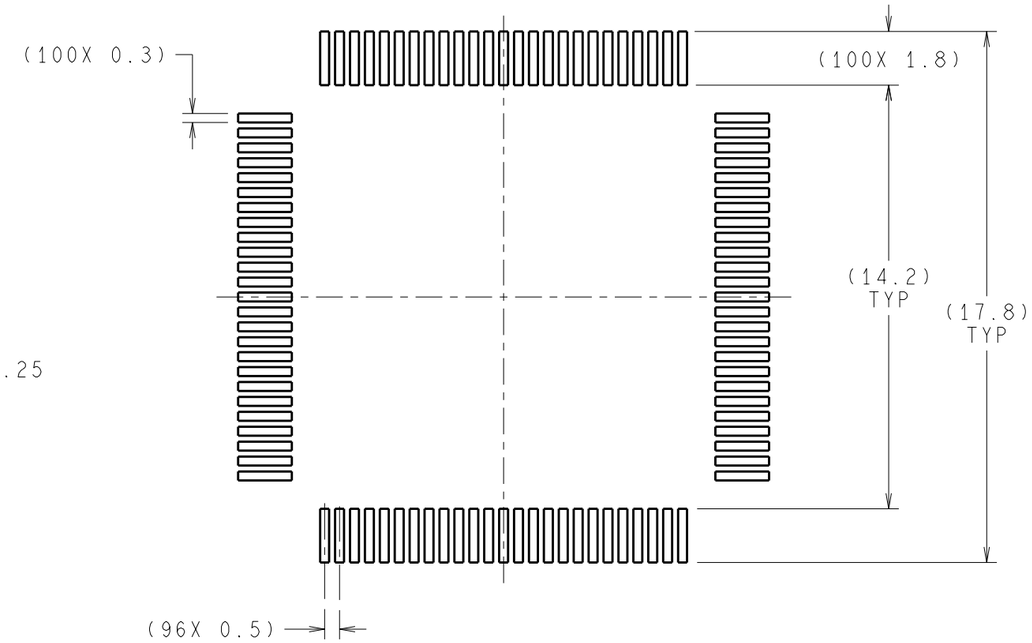

RECOMMENDED LAND PATTERN

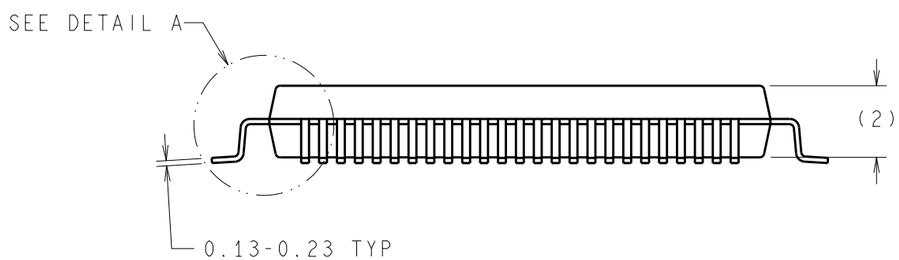

DIMENSIONS ARE IN MILLIMETERS

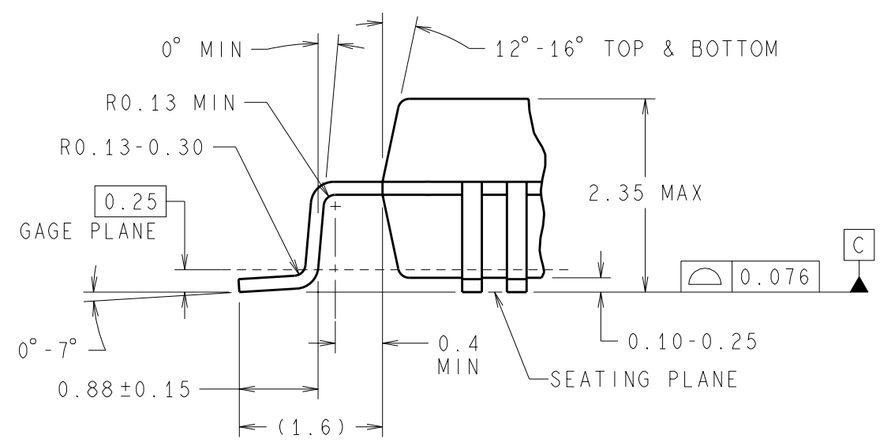

DETAIL A
TYP, SCALE: 15X

NOTES: UNLESS OTHERWISE SPECIFIED

1. FOR LEAD FINISH THICKNESS AND COMPOSITION, SEE "SOLDER INFORMATION" IN THE PACKAGING SECTION OF THE NATIONAL SEMICONDUCTOR WEB PAGE (www.national.com).
2. DIMENSION DOES NOT INCLUDE MOLD PROTRUSION. MAXIMUM ALLOWABLE MOLD PROTRUSION 0.25mm PER SIDE.
3. NO JEDEC REGISTRATION AS OF MARCH 2003.

APPROVALS	DATE
DRAWN MARTA SUCHY	03/14/2003
DFTG. CHK. THANH LEQUANG	03/14/2003
ENGR. CHK. RANDY WALBERG	03/14/2003

PROJECTION MM

National Semiconductor
2900 Semiconductor Dr, Santa Clara, CA 95052-8090

PQFP,
14x14x2.0mm BODY,
100 LEAD, 0.5mm PITCH

SCALE	SIZE	DRAWING NUMBER	REV
NTS	B	(SC)MKT-VKQ100A	A

FORMERLY: N/A
SHEET 1 of 1