REVISIONS				
LTR	DESCRIPTION	E.C.N.	DATE	BY/APP'D
A	RELEASE TO DOCUMENT CONTROL	11375	02/29/1996	MS/KH
B	LD PITCH TOL WAS ±.005; CHANGE LD RADIUS TO REF DIM; REMOVE THE OTHER R.006±.002; DIM .040±.003 WAS .037±.003	11442	04/19/1996	MS/KH
C	R .015[0.38] WAS R .006[0.15]	11839	10/08/1997	TL/

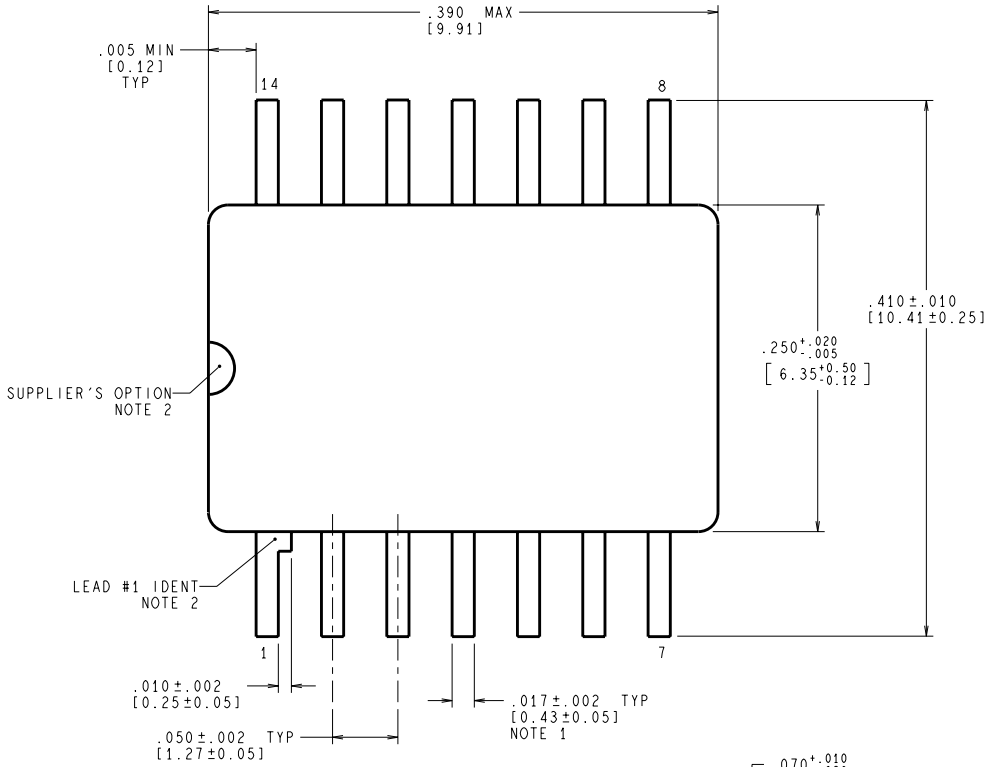

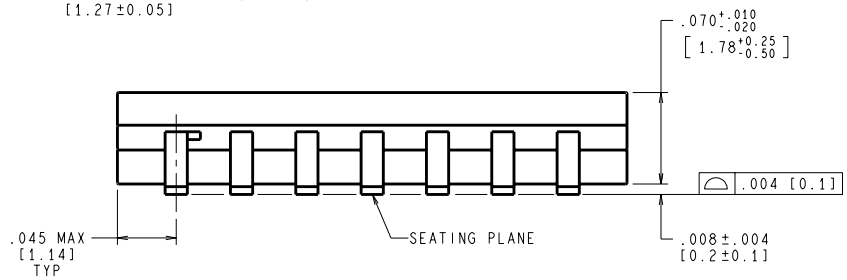

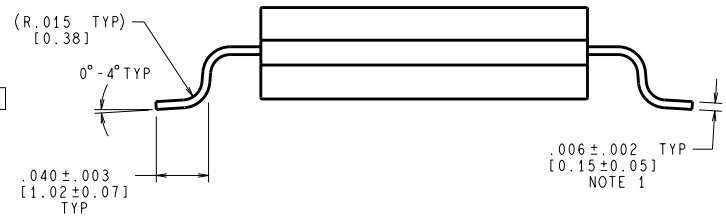

NOTES: UNLESS OTHERWISE SPECIFIED

1. LEAD FINISH: SOLDER DIPPED WITH Sn60 OR Sn63 SOLDER CONFORMING TO MIL-PRF-38535 TO A MINIMUM THICKNESS OF 200 MICROINCHES/ 5.08 MICROMETERS. SOLDER MAY BE APPLIED OVER LEAD BASIS METAL OR Sn PLATE. MAXIMUM LIMIT MAY BE INCREASED BY .003 IN/ 0.08mm AFTER LEAD FINISH APPLIED.

2. LEAD 1 IDENTIFICATION SHALL BE:
   a) A NOTCH OR OTHER MARK WITHIN THIS AREA
   b) A TAB ON LEAD 1, EITHER SIDE

3. NO JEDEC REGISTRATION AS OF FEBRUARY 1996.

CONTROLLING DIMENSION IS INCH
VALUES IN [ ] ARE MILLIMETERS

MIL-PRF-38535
CONFIGURATION CONTROL

APPROVALS	DATE
DRAWN MARTA SUCHY	02/29/96
DFTG. CHK.	
ENGR. CHK.	

National Semiconductor
2900 Semiconductor dr, Santa Clara, CA 95052-8090

CERPACK, 14 LEAD, GULL WING

PROJECTION INCH [MM]

SCALE	SIZE	DRAWING NUMBER	REV
N/A	C	(SC)MKT-WG14A	C

DO NOT SCALE DRAWING | SHEET 1 of 1