EPIGAP OPTRONIC GMBH

Product Data Sheet

LED Lamp Infra Red EOLD-1550-525

Rev. 01 aus 2011

Radiation	Type	Case
Infra Red	MQW	5mm plastic lens

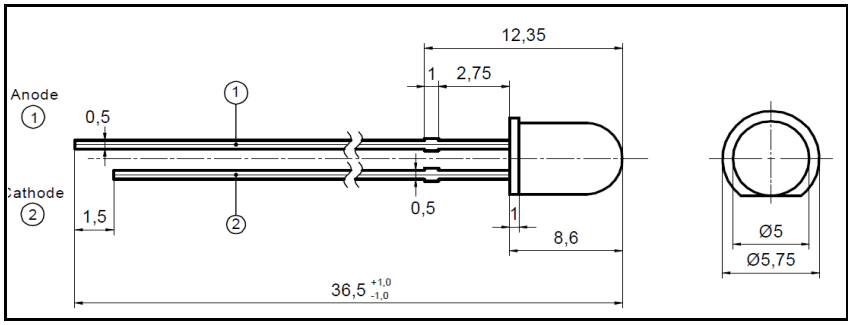

Description:

High-power, high-speed infrared LED in standard 5mm package, housin without standoff leads

for optical communications, safety equipment and automation

Maximum Ratings

T_{amb}= 25℃, unless otherwise specified

Parameter	Test Conditions	Symbol	Value	Unit
Forward Current		I_F	100	mA
Peak forward current	(t_p ≤ 50 µs, t_p /T = ½)	I_{FM}	200	mA
Power dissipation		P_D	150	mW
Operating temp. range		T_{amb}	-20 to +80	℃
Storage temp. range		T_{stg}	-55 to +100	℃
Lead soldering temp.	t< 5s, 3mm from case	T_{slg}	260	℃

Optical and Electrical Characteristics

T_{amb}= 25℃, unless otherwise specified

Parameter	Symbol	Conditions	Min	typ	max	Unit
Forward voltage	V_F	I_F= 20mA		0.75	0.9	V
Forward voltage	V_F	I_F= 100mA		0.85		V
Reverse voltage	V_R	I_R= 10µA	5			V
Radiant Power	Φ_e	I_F= 20mA	1.1	1.4		mW
Radiant Power	Φ_e	I_F= 100mA		5.0		mW
Peak wavelength	λ_p	I_F= 20mA	1530	1550	1570	nm
Spectral bandwidth at 50%	$\Delta\lambda_{0,5}$	I_F= 20mA		130		nm
Viewing angle	φ	I_F= 20mA		20		deg.
Switching time	t_r, t_f	I_F= 20mA		10		ns

RoHS COMPLIANT Pb Pb-Free

We reserve the right to make changes to improve technical design and may do so without further notice. Parameters can vary in different applications. All operating parameters must be validated for each customer application by the customer.

Polytec

POLYTEC GmbH Polytec-Platz 1 - 7 D -76337 Waldbronn GERMANY
Tel: +49 (72 43) 604 1730 Fax: +49 (72 43) 6 99 44 E-Mail: oek@polytec.de www.polytec.de