Analamp® Mercury Lamps

More Than A Lamp Manufacturer

BHK offers a wide variety of **Analamp®** light sources for analytical, industrial, medical and scientific uses. **BHK Analamps®** feature an efficient double-bore tubing construction using high quality fused silica. Low-pressure mercury **Analamps®** provide reliable UV-VIS radiation and are also available with a special quartz jacket that eliminates 185nm radiation for ozone-free operation. This jacketing also provides more stable lamp operation by reducing the effects of rapid ambient temperature changes.

Analamps® are manufactured using the strictest quality control and product testing procedures. All **BHK Mercury Analamps®** are available with application-specific phosphor coatings to meet your needs. Contact **BHK** with your requirements and phosphor information. Special rare gas **Analamps®** are also available with fills of Argon, Krypton, Neon, or Xenon when other wavelengths are required. A full line of power suppliies are available. Ask for our Power Supply Data Sheet for a complete selection to meet your needs.

Analamp Typical Life Data

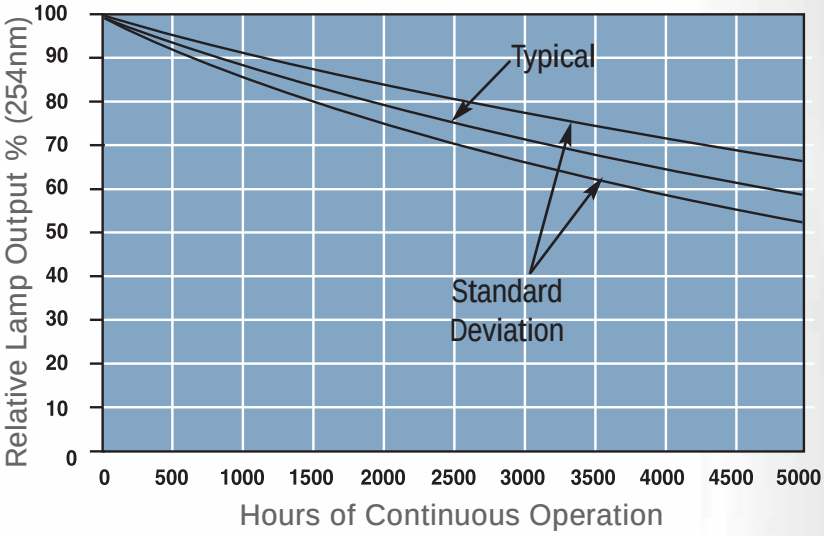

Features

- *High UV-VIS Output*
- *Low Noise*
- *Ozone Free & Ozone Producing*
- *Application Specific Phosphor Coatings*
- *Various Lengths And Configurations*
- *Rare Gas Filled Analamps: Neon, Argon, Krypton, Xenon*
- *ISO 9001:2008 Certified*

Applications

- *Spectroscopy, Fluorometry, Wavelength Calibration*
- *Water & Air Purification*
- *Ozone Generators, Interferometers*
- *Photochemical Studies, UV Curable Polymers*
- *Fixed Wavelength Photometers*
- *UV Sterilizers, Analytical Instruments*

Analamp® Mercury Lamps

Light Output Vs. Current

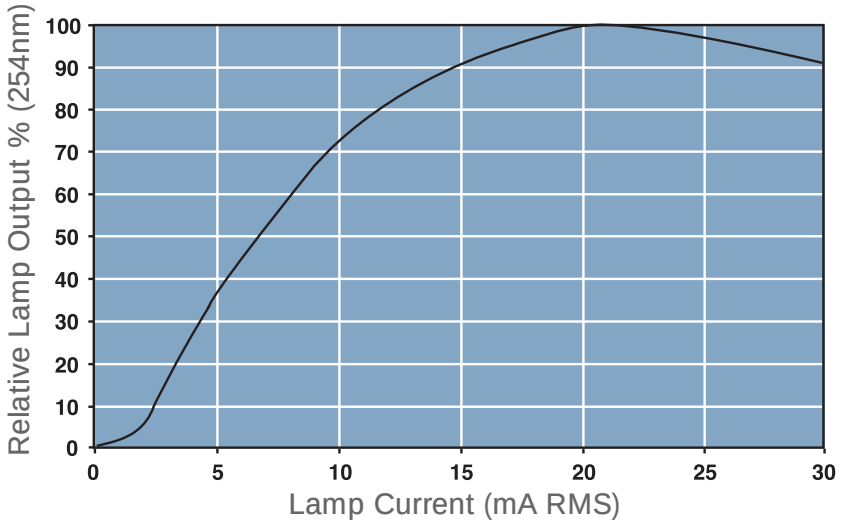

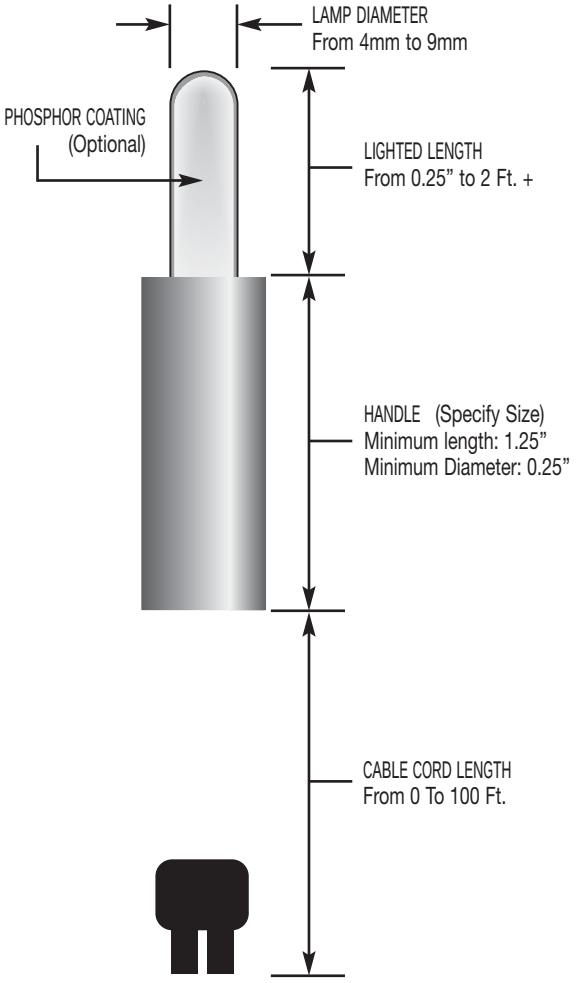

Mercury Analamp Emission Data
(Ozone Free)

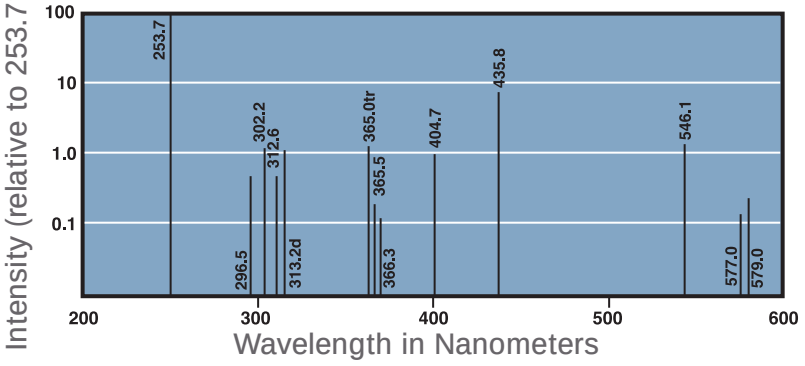

Standard Lamps

	Part Number	Lamp Type	Maximum Start Volts (V RMS)	Maximum Oper volts (V RMS)	Primary Wavelength (nm)	Minimum Intensity @20 cm[1] (uW/cm^2)	Phosphor Bandwidth (FWHM nm)	Min. 185 nm Intensity @20 cm (uW/cm^2)	Lighted Length (Inches)	Cord+ Connector Length (Inches)
Mercury Lamps (Std & Synthetic Qtz)	80-1025-01	Mercury (Ozone Free)	900	240	254	27	N/A	N/A	1.0	17.5
	80-1025-01/285	Phosphor Coated (Ozone Free)[2]	900	240	285	0.23	32	N/A	1.0	17.5
	80-1057-01	Mercury (Ozone Free)	1050	320	254	60	N/A	N/A	2.0	17.5
	81-1025-01	Mercury (Ozone Producing)	900	240	254	30	N/A	16*	1.0	17.5
	81-1025-51	Mercury Synthetic Qtz (OZP)	900	240	254	33	N/A	24*	1.0	17.5
	81-1057-01	Mercury (Ozone Producing)	1050	320	254	66	N/A	30*	2.0	17.5
	81-1057-51	Mercury Synthetic Qtz (OZP)	1050	320	254	73	N/A	42*	2.0	17.5
Rare Gas Lamps	81-1057-18	Neon Gas	1050	320	640.5	N/A	N/A	N/A	2.0	17.5
	81-1057-21	Argon gas	950	370	764	N/A	N/A	N/A	2.0	17.5
	81-1057-23	Krypton Gas	1050	320	760	N/A	N/A	N/A	2.0	17.5
	81-1057-24	Xenon Gas	1200	320	823.7	N/A	N/A	N/A	2.0	17.5

NOTES * Measured in Argon

1. Operating on a BHK High Frequency Power Supply at 20mA at Primary Wavelength.
2. BHK offers a wide variety of Phosphor Coated Lamps. Please contact us for a full selection and technical information.

WARRANTY

PHOSPHOR COATED LAMPS: 1 yr or 3500 hrs to half minimum intensity specification
NON-PHOSPHOR COATED LAMPS: 1 yr or 5000 hrs to half minimum intensity specification

BHK INC.

Polytec

POLYTEC GmbH **Polytec-Platz 1 - 7** **D -76337 Waldbronn** **GERMANY**
Tel: +49 (72 43) 60 41 54 **Fax: +49 (72 43) 6 99 44** **E-Mail: osm@polytec.de** **www.polytec.de**