TE - COOLED PHOTODETECTOR

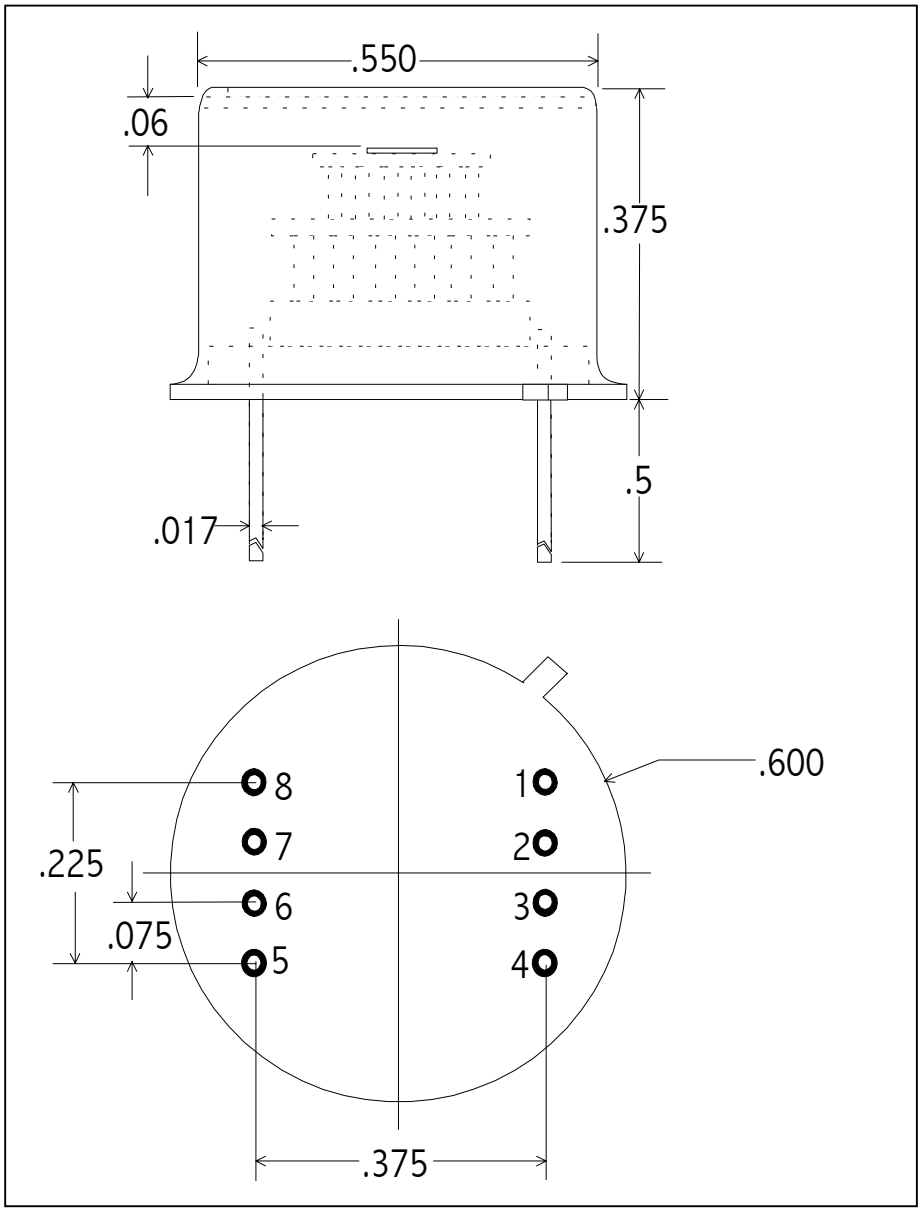

Part No:
PBS – 010 – TE2

PIN OUT

1 = COOLER (-)
2 = THERMISTOR
3 = THERMISTOR
4 = COOLER (+)
5 = DETECTOR
6 = DETECTOR
7 = NO CONNECT
8 = NO CONNECT

Note: Dimensions in inches

Operating Note

The TE cooled photodetector series consists of a high performance photodetector mounted on a thermoelectric cooler, all housed in a TO-8 package. A thermistor is mounted to the TEC's cold plate to provide a precise, reliable temperature monitor. Before operation VERIFY ELECTRICAL WIRING, else catastrophic damage may be sustained by the unit. Electrical power consumption can exceed 2.5 Watts (2V / 1.25A); therefore, this package must be suitably heat sunk. Thermal grease with secure clamping is recommended for power dissipation. Temperature levels below –45°C are possible with an optimized mechanical assembly.

SPECIFICATIONS		
Detector Type	1mm x 1mm PbS Photoconductor	
Operating Temperature (°C)	22	-30
Shunt Resistance (MΩ)	0.2 – 1.0	.5 – 3.0
D* (pk, 1 kHz, 1 Hz)	1.0×10^{11}	3.0×10^{11}
Responsivity @ pk (V/W)	4×10^{5}	1×10^{6}
Thermistor Resistance (kΩ)	1.6 typ	40 typ
Cooler Current (A)	0.00	0.60 typ
Maximum Cooler Current (A)	1.25	