# TE - COOLED PHOTODETECTOR

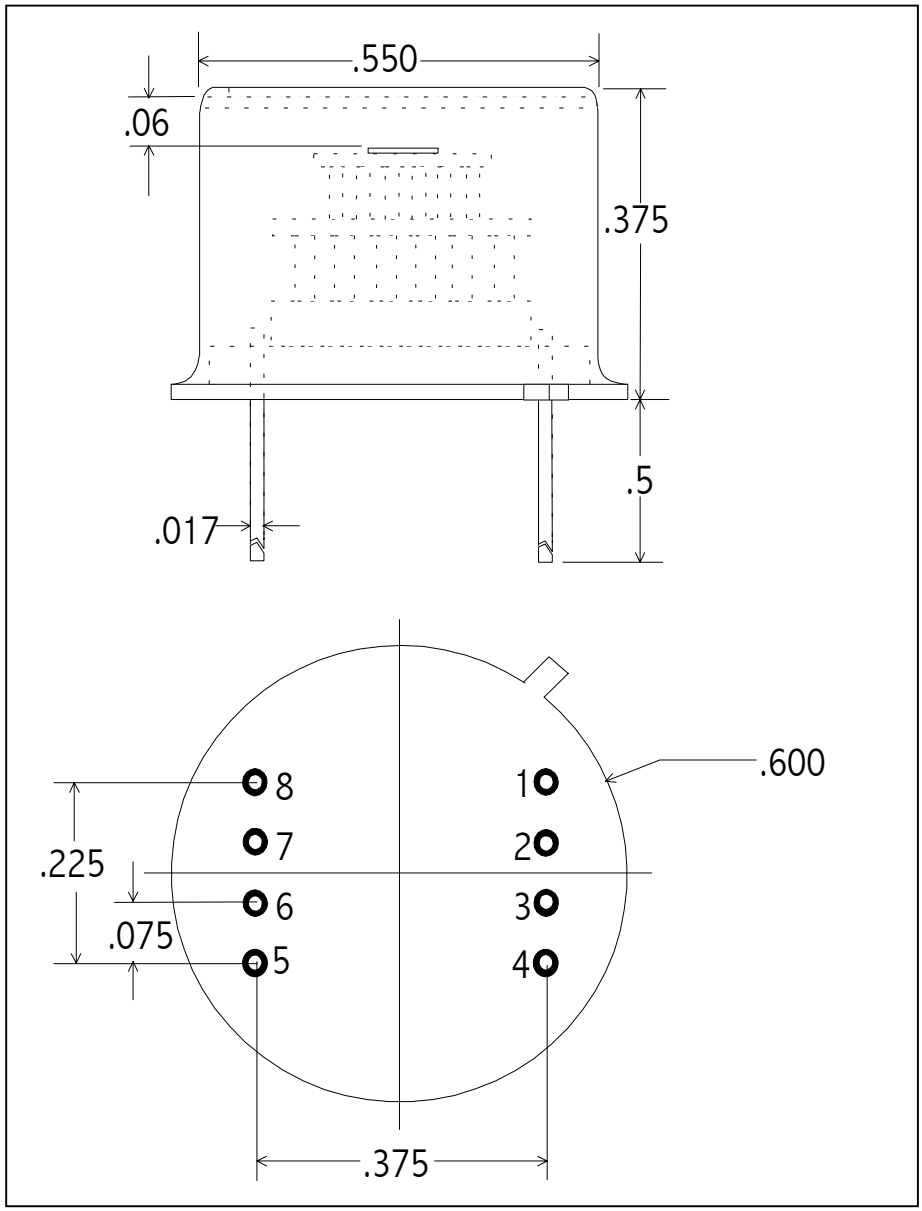


**Part No:**
**PBSE – 050 – TE2**

**PIN OUT**

**1 = COOLER (-)**
**2 = THERMISTOR**
**3 = THERMISTOR**
**4 = COOLER (+)**
**5 = DETECTOR**
**6 = DETECTOR**
**7 = NO CONNECT**
**8 = NO CONNECT**

**Note:** Dimensions in inches

## Operating Note

The TE cooled photodetector series consists of a high performance photodetector mounted on a thermoelectric cooler, all housed in a TO-8 package. A thermistor is mounted to the TEC's cold plate to provide a precise, reliable temperature monitor. Before operation VERIFY ELECTRICAL WIRING, else catastrophic damage may be sustained by the unit. Electrical power consumption can exceed 2.5 Watts (2V / 1.25A); therefore, this package must be suitably heat sunk. Thermal grease with secure clamping is recommended for power dissipation. Temperature levels below –45°C are possible with an optimized mechanical assembly.

| SPECIFICATIONS | | |
|---|---|---|
| Detector Type | 5mm x 5mm PbSe Photoconductor | |
| Operating Temperature (°C) | 22 | -30 |
| Shunt Resistance (MΩ) | 0.1 – 1.0 | .5 – 3.0 |
| D* (pk, 1 kHz, 1 Hz) | > 2 x $10^9$ | 1.0 x $10^{10}$ |
| Responsivity @ pk (V/W) | 1000 | 1 x $10^4$ |
| Thermistor Resistance (kΩ) | 1.6 typ | 40 typ |
| Cooler Current (A) | 0.00 | 0.60 typ |
| Maximum Cooler Current (A) | 1.25 | |

Polytec
POLYTEC GmbH Polytec-Platz 1 - 7 D - 76337 Waldbronn GERMANY
Tel: +49 (72 43) 60 41 54 Fax: +49 (72 43) 6 99 44 E-Mail: osm@polytec.de www.polytec.de