AD-A139 738 DIGITAL MICROWAVE SYSTEM DESIGN GUIDE(U) RANGE COMMANDERS COUNCIL WHITE SANDS MISSILE RANGE NM TELE-COMMUNICATIONS GROUP FEB 84 RCC/TCG-207-84 1/3

UNCLASSIFIED F/G 9/5 NL

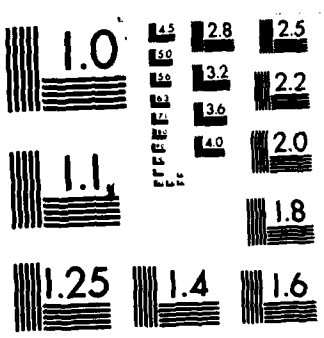

MICROCOPY RESOLUTION TEST CHART
NATIONAL BUREAU OF STANDARDS-1963-A

TCG

DOCUMENT 207-84

AD A139738

DIGITAL MICROWAVE SYSTEM DESIGN GUIDE

FEBRUARY 1984

RANGE COMMANDERS COUNCIL

WHITE SANDS MISSILE RANGE
KWAJALEIN MISSILE RANGE
YUMA PROVING GROUND

PACIFIC MISSILE TEST CENTER
NAVAL WEAPONS CENTER
ATLANTIC FLEET WEAPONS TRAINING FACILITY
NAVAL AIR TEST CENTER

EASTERN SPACE AND MISSILE CENTER
ARMAMENT DIVISION
WESTERN SPACE AND MISSILE CENTER
AIR FORCE SATELLITE CONTROL FACILITY
AIR FORCE FLIGHT TEST CENTER
AIR FORCE TACTICAL FIGHTER WEAPONS CENTER

DTIC
ELECTE
APR 4 1984
S D
A

This document has been approved for public release and sale; its distribution is unlimited.

DTIC FILE COPY

84 04 03 144

DOCUMENT 207-84

DIGITAL MICROWAVE SYSTEM DESIGN GUIDE

February 1984

Prepared by

Communications and Data
Transmission Committee
Telecommunications Group

Published by

Secretariat
Range Commanders Council
White Sands Missile Range
New Mexico 88002

APPROVED FOR PUBLIC RELEASE; DISTRIBUTION UNLIMITED

TABLE OF CONTENTS

	PAGE
FOREWORD	ix
1.0 INTRODUCTION	1-1
1.1 Purpose	1-1
1.2 Objectives	1-1
1.3 Discussion	1-1
2.0 SYSTEM REQUIREMENTS	2-1
2.1 System Designer Requirements	2-1
2.2 Mission Requirements	2-1
2.3 User Requirements	2-4
3.0 SYSTEM DESIGN	3-1
3.1 System Constraints	3-1
3.2 System Architecture	3-1
3.3 System Operational Reliability	3-90
4.0 SYSTEM ANALYSIS	4-1
4.1 Propagation	4-1
5.0 SYSTEM SPECIFICATIONS	5-1
5.1 Frequency Bands Available for Government Services	5-1
5.2 Diversity Considerations	5-4
5.3 Received Signal Characteristics	5-16
5.4 Antenna Systems	5-19
5.5 Waveguide and Transmission Line	5-33
5.6 Passive Repeaters	5-50
5.7 Uninterruptible Power Systems	5-64
APPENDIXES	
A. Pacific Missile Test Center Digital Communications	A-1
B. Bibliography	B-1
C. Glossary	C-1

Accession For
NTIS GRA&I ☑
DTIC TAB ☐
Unannounced ☐
Justification
By
Distribution/
Availability Codes
Dist | Avail and/or Special
A-1

DTIC COPY INSPECTED 3

PAGE

LIST OF TABLES

Table 3-1. PCM Bit Rates. 3-11
Table 3-2. Synchronizing Pattern. 3-29
Table 3-3. Microwave Digital Radio Comparison 3-53
Table 3-4. Functions of the 12 Channels 3-62
Table 3-5. Digital Multiplex Systems. 3-63
Table 3-6. Sample Spares Calculation. 3-107

Table 4-1. Attenuation Due to Atmospheric Absorption. 4-16

Table 5-1. Microwave Bands Available for Federal Government Services within the U.S.A.. 5-1
Table 5-2. Relationship Between System Reliability and Outage Time. 5-9
Table 5-3. Categories of Fade 5-10
Table 5-4. Plane Polarized Parabolic Antenna Gain 5-24
Table 5-5. Dimensions X and Y and Antenna Frontal Area "A". . . 5-31
Table 5-6. Load Coefficients for Standard Parabolic Antennas. . 5-32
Table 5-7. Wind Forces at 125 Mph (200 Km/Hr) 5-33
Table 5-8. Antenna Weight and Center of Gravity 5-34
Table 5-9. Cable/Antenna Part Number. 5-36
Table 5-10. VSWR Conversion Chart. 5-39
Table 5-11. Elliptical Waveguide Types 5-44
Table 5-12. Circular Waveguide Types 5-45
Table 5-13. Rectangular Waveguide Types. 5-46
Table 5-14. Times to Purge and Pressurize Various Types of Transmission Lines. 5-51
Table 5-15. Typical Standard Powering Systems. 5-68
Table 5-16. Time Alteration for Lead-Acid Batteries Based on High and Low Temperatures 5-70
Table 5-17. Temperature and Altitude Derating. 5-76

LIST OF FIGURES

Figure 3-1. Space diversity--hot standby transmitters. 3-4
Figure 3-2. Space diversity - no standby 3-5
Figure 3-3. Space and frequency diversity. 3-6
Figure 3-4. Hybrid diversity 3-7
Figure 3-5. Time division multiplexing 3-9
Figure 3-6. Types of modulation employed 3-10
Figure 3-7. Delta modulation or differential PCM 3-11
Figure 3-8. CCITT North American PCM hierarchy 3-12
Figure 3-9. Stuffing principle 3-14
Figure 3-10. PCM waveforms. 3-15
Figure 3-11. Energy spectra comparison of unipolar and bipolar pulse trains 3-16
Figure 3-12. Bandwidth and pulse shape. 3-18
Figure 3-13. Filtering on pulse shape 3-19

PAGE

Figure 3-14. Eye patterns. 3-20
Figure 3-15. Eye pattern detector. 3-21
Figure 3-16. Partial response filtering. 3-22
Figure 3-17. Voice frequency sampling and coding summary 3-24
Figure 3-18. Voice channel sequential sampler. 3-25
Figure 3-19. Companding principles 3-26
Figure 3-20. PCM code building 3-27
Figure 3-21. Composite T-1 format. 3-30
Figure 3-22. Amplitude shift keying. 3-32
Figure 3-23. Frequency shift keying. 3-33
Figure 3-24. Phase shift keying. 3-34
Figure 3-25. Four-phase shift keying 3-35
Figure 3-26. Eight-phase shift keying. 3-36
Figure 3-27. BER curves, theoretical 3-37
Figure 3-28. Sixteen-phase shift keying. 3-38
Figure 3-29. Tertiary partial response keying. 3-39
Figure 3-30. Quadrature partial response keying (AM only). 3-40
Figure 3-31. Quadrature partial response keying (AM & PSK) 3-41
Figure 3-32. Comparison of modulation systems. 3-42
Figure 3-33. Occupied RF spectrum. 3-43
Figure 3-34. Digital system spectrum considerations. 3-44
Figure 3-35. Transmitter filter. 3-45
Figure 3-36. Receiver filter 3-45
Figure 3-37. Impulse response of raised cosine filters 3-46
Figure 3-38. BER versus received carrier 3-48
Figure 3-39. Analog system receiver carrier power. 3-49
Figure 3-40. Comparison of PSK systems 3-50
Figure 3-41. Frequency diversity arrangement 3-51
Figure 3-42. Space diversity receivers with hot standby transmitters. 3-52
Figure 3-43. Power split receivers with hot standby transmitters. 3-52
Figure 3-44. Digital radio terminal. 3-55
Figure 3-45. Digital radio repeater configuration. 3-56
Figure 3-46. DS-3 interface. 3-57
Figure 3-47. MDR-()/MDR-()-5 transmitter 3-59
Figure 3-48. MDR-() receiver block diagram 3-61
Figure 3-49. DMX-13() terminal block diagram 3-65
Figure 3-50. DS-1 low-speed equipment modules. 3-67
Figure 3-51. DS-2 equipment modules. 3-68
Figure 3-52. High-speed transmit equipment signal flow 3-69
Figure 3-53. High-speed receive equipment signal flow. 3-70
Figure 3-54. Block diagram of the basic MCS-11 system. 3-73
Figure 3-55. Master station receiver 3-75
Figure 3-56. Word format 3-77
Figure 3-57. Master detail fault receiver. 3-79
Figure 3-58. Master control unit 3-80
Figure 3-59. Expanded MCS-11 master station, showing detail alarm and remote control capabilities. . . . 3-81
Figure 3-60. Expanded MCS-11 remote station. 3-82

PAGE

Figure 3-61. Multiplex terminal transmit functional block diagram. 3-83
Figure 3-62. Multiplex terminal receive functional block diagram. 3-84
Figure 3-63. System performance standard. 3-92
Figure 3-64. Failure rate versus operating time 3-97
Figure 3-65. Calculation of reliability for a series system configuration 3-98
Figure 3-66. Calculation of reliability for a parallel (redundant) system 3-98
Figure 3-67. Reliability calculations for a mixed (series-parallel) network. 3-99
Figure 3-68. Individual confidence level calculation chart. . . . 3-103
Figure 3-69. Relationships of MTBF, MTTR, and MTTF. 3-108
Figure 3-70. Series unit MTBF-MTTR profiles 3-110
Figure 3-71. Redundant unit MTBF-MTTR profiles. 3-111
Figure 3-72. Maintenance and sparing effects on profiles. 3-112

Figure 4-1. Refraction at a boundary between air at different densities. 4-1
Figure 4-2. Ground-reflected multipath propagation 4-3
Figure 4-3. Energy contribution from a wave front to a receiver. 4-5
Figure 4-4. Obstructed wave front. 4-6
Figure 4-5. Lowered obstruction effects on wave front. 4-6
Figure 4-6. Diffraction attenuation. 4-8
Figure 4-7. Free space loss between isotropic antennas 4-9
Figure 4-8. Rain attenuation versus rainfall rate. 4-10
Figure 4-9. Subrefraction caused by variations of the K-factor in the atmosphere 4-12
Figure 4-10. Superrefraction caused by variations of the K-factor with height in the atmosphere (dN/dh) . . 4-12
Figure 4-11. Multipath caused by elevated-duct reflections. . . . 4-13
Figure 4-12. Multipath caused by ground-based ducting layer . . . 4-13
Figure 4-13. Deflection of a microwave signal by a duct boundary at the elevation of a path line 4-13
Figure 4-14. Deflection of a microwave signal by an elevated duct. 4-14
Figure 4-15. Scintillating type atmospheric multipath 4-15
Figure 4-16. Overreach interference criteria. 4-17
Figure 4-17. Adjacent section and junction or spur interference 4-18
Figure 4-18. Radar interference case. 4-20
Figure 4-19. Interference coordination of paralleling systems. 4-21
Figure 4-20. Cochannel interference, MDR-6. 4-22
Figure 4-21. Cochannel interference, MDR-11 4-23
Figure 4-22. Cochannel interference at a high RSL 4-24
Figure 4-23. Adjacent channel interference, MDR-11. 4-26
Figure 4-24. Adjacent channel interference, MDR-6 4-27

PAGE

Figure 4-25. Path attenuation of vertical polarization as a function of rain rate. 4-28
Figure 4-26. Additional attenuation of horizontal over vertical as a function of rain rate 4-28
Figure 4-27. Microwave path profile illustrating K-factor effects. 4-31
Figure 4-28. Earth curvature for various values of K 4-32
Figure 4-29. Earth curvature correction. 4-33
Figure 4-30. Nomogram for 0.6 first Fresnel zone clearance 4-36
Figure 4-31. Reflection point nomograph. 4-37

Figure 5-1. Example of 2A-B products utilizing full growth stacking to 8 RF channels 5-3
Figure 5-2. Standard configuration frequency diversity. 5-3
Figure 5-3. Expansion of figure 5-2 to four channels on a single antenna 5-5
Figure 5-4. Dual antenna conversion with growth from four channels to five 5-6
Figure 5-5. Growth of figure 5-3 from four to eight RF channels 5-7
Figure 5-6. Growth to 11 RF channels. 5-8
Figure 5-7. Expanded section shows frequency diversity improvement for various frequency spacings--Rayleigh distribution curve 5-11
Figure 5-8. Gains and losses across one hop of a microwave radio link. 5-17
Figure 5-9. Example path calculations with optional system noise computations 5-18
Figure 5-10. MDR-8 system gain considerations--frequency diversity, single antenna 5-20
Figure 5-11. MDR-8 system gain considerations--frequency diversity, dual antenna 5-21
Figure 5-12. MDR-8 system gain considerations. 5-22
Figure 5-13. Envelope pattern for a dual polarized, 10-foot antenna 5-23
Figure 5-14. Antenna reflector efficiency curves 5-28
Figure 5-15. Wind forces acting on a parabolic antenna 5-29
Figure 5-16. Windload coefficients for standard antennas 5-29
Figure 5-17. Windload coefficients for standard antennas with radomes. 5-30
Figure 5-18. Windload coefficients for high-performance antennas. 5-30
Figure 5-19. Antenna center of gravity 5-35
Figure 5-20. Foam dielectric cable attenuation 5-37
Figure 5-21. Air dielectric cable attenuation. 5-38
Figure 5-22. Variation of coaxial cable attenuation with ambient temperature. 5-39
Figure 5-23. Single coaxial cable profile. 5-40
Figure 5-24. Efficiency conversion chart for dB. 5-41

PAGE

Figure 5-25. Field configuration of the dominant mode ($TE_{1,0}$) in a rectangular waveguide. 5-42
Figure 5-26. Waveguide attenuation (English units) 5-47
Figure 5-27. Waveguide attenuation (metric units). 5-48
Figure 5-28. Typical unpressurized coaxial cable transmission system 5-52
Figure 5-29. Typical pressurized coaxial cable transmission system 5-53
Figure 5-30. Typical elliptical waveguide transmission line system 5-54
Figure 5-31. Typical circular waveguide transmission line system (shown with dual polarization and high-performance antenna) 5-55
Figure 5-32. Back-to-back passive. 5-56
Figure 5-33. Single passive billboard application. 5-57
Figure 5-34. Double billboard passive repeater applications used where α is less than 50 degrees. 5-58
Figure 5-35. Passive repeater far-field distance 5-60
Figure 5-36. Passive repeater gain 5-61
Figure 5-37. Passive repeater gain correction when repeater is in near field. 5-62
Figure 5-38. Double passive repeater efficiency curves 5-63
Figure 5-39. DC power plant diagram. 5-65
Figure 5-40. Behavior of battery cell under various conditions. 5-67
Figure 5-41. Average capacity of mean size cells including connection. 5-69
Figure 5-42. Battery sizing chart. 5-71
Figure 5-43. Resonant charger circuit. 5-72
Figure 5-44. Magnetic amplifier (mag-amp) charger circuit. 5-74
Figure 5-45. Silicon-controlled rectifier (SCR) charger circuit 5-75
Figure 5-46. Battery charger sizing chart. 5-77

APPENDIX A

Figure A-1. Southern California offshore microwave paths. A-2
Figure A-2. San Nicolas Island digital microwave system A-3
Figure A-3. Vandenberg AFB digital microwave system A-4
Figure A-4. Point Mugu/SNI multiplex. A-5
Figure A-5. Point Mugu/Laguna Peak multiplex. A-6
Figure A-6. Point Mugu/SCI multiplex. A-7
Figure A-7. Point Mugu/VAFB multiplex A-8

APPENDIX C

Figure C-1. Carrier-to-noise ratio. C-3

FOREWORD

In preparing the Digital Microwave System Design Guide for Task TC-21, many reference sources were surveyed. The survey showed very little user experience in the Department of Defense community in digital microwave systems. A decision was made by the Communications and Data Transmission Committee of the Telecommunications Group to use the manual prepared for the Philippine Mindanao Microwave Communication System as the best source material available at this time. This Design Guide is expected to be updated periodically for the use of digital microwave system designers and planners at the member and associate member ranges of the Range Commanders Council.

The source material from the manual is the property of the U.S. Government, prepared under contract by the Rockwell International Collins Transmission Systems Division through the U.S. Army Communications-Electronics Engineering Installation Agency, Fort Huachuca, Arizona. No attempt was made to delete references to Rockwell International or other manufacturers' equipment in this Design Guide, but no endorsement of performance or reliability is intended.

1.0 INTRODUCTION

1.1 Purpose. The purpose of this design guide is to provide a digital microwave system planning guide for use by digital microwave systems engineers at Department of Defense ranges.

1.2 Objectives. The objectives of this design guide are

a. To furnish a guide for digital microwave system design to be used by microwave engineers to implement a standardized approach to digital microwave systems for U.S. national ranges,

b. To provide and maintain cognizance of applicable technical publications available by submitting on a timely basis those technical directives, standards, and references that impact on digital system design and may be included as an update to this planning document.

1.3 Discussion. Most of the telecommunications plants throughout the world have been built for analog transmission. In that mode, analog signals remain in analog form throughout the transmission process, while digital signals must be converted into a quasi-analog type signal. Digital transmission is the transfer of information by digital signals. Information represented by digital signals is referred to as digital data, and information is conveyed by arranging this digital data into patterns having assigned meanings in accordance with a coding scheme.

User equipment represents a wide variety of types. Typical types are found in the fields of telephony, telegraphy, data, and facsimile. In general, any input-output device that effects an interface between the human and an electronic circuit may be considered as user equipment. Teletype, computer, and various other user equipment initiate transmissions that are inherently digital in nature and readily encoded for transmission via the digital transmission system. Analog signals such as those produced by a microphone in response to audio stimulation present a more complex problem for digital communications. This type of signal is continuous, following the amplitude variations of the message waveform. For digital transmission, it must be converted into a signal that is discrete in both amplitude (or polarity) and time. This conversion process must appear transparent to the user of the transmission medium.

The problem of the communications engineer is to design a system to transmit intelligence from one location (source) to one or more other locations (sinks) with little change in the information content. In the well-defined communications system, the output is essentially the same as the input, only delayed and slightly modified due to input-output device characteristics, transmission circuit distortions, and system-generated noises. Speech is transmitted with reasonable likeness, while drawings and teletype transmissions result in a received printed page resembling the original copy. The nearer the communication channel approaches perfection, the more it resembles a direct connection between sending and receiving user equipment.

Because of the many factors involved in communications system design, the importance of starting with accurate definitions of user requirements cannot be overemphasized. To accomplish this, the transmission systems engineer, traffic analyst, users, and managers must coordinate their requirements into an effective communications requirements plan.

2.0 SYSTEM REQUIREMENTS

2.1 System Designer Requirements

2.1.1 Problem Definition. The initial step in designing a communications system is the problem definition stage, which involves determining the types of information or intelligence that must be transmitted (voice, data, video, teletype, etc.) and the objectives of the user of this intelligence. The effective design of a communications system must satisfy both the immediate and future requirements, providing for flexibility, growth, and new services. If the requirements and objectives have not been clearly stated, the systems engineer must continue to query management and users to insure that the basic criteria for the design are defined as fully as possible. If certain factors cannot be determined, the known requirements can be used in the evaluation process, with a range of solutions available to the designer in defining the final communication requirement.

2.1.2 Communications Volume. The next question to be addressed is the volume of communications needed. This is determined by examining traffic statistics and loading and by predicting future requirements from study of past growth. In complex communications networks, traffic analysis is a continuous effort, setting parameters for subsequent stages of expansion after the system design is finished.

2.1.3 Quality of Service. Following logically must be a question of service needed. This involves matching the design objectives with volume requirements and desired technical performance. Additionally, system operating requirements and system geography may be addressed at this point. If applicable, existing facilities may be evaluated against the new system requirements to determine their adequacy. This process may involve tradeoffs necessary to avoid the time and cost of new facility construction.

2.1.4 Modulation Techniques. Various techniques of digital transmission and signal processing must be goals of the above criteria. When techniques have been selected and the proper equipment has been identified, all factors are subjected to a communications-systems evaluation. Of concern at this evaluation are the comparison of quantitative and qualitative aspects versus the initial capital cost requirements and the cost of maintaining quality service. The system design is examined to determine the degree of flexibility, growth potential, and new service it can support. When all these factors are satisfactorily evaluated, the design specification and the communication objectives are satisfied.

2.2 Mission Requirements

2.2.1 Mission Analysis. While voice and data make up the bulk of range communications requirements, other considerations may be facsimile and television transmission. The engineering design process of a digital communications system for any range environment must include mission analysis. This analysis identifies the communication requirements imposed by a military mission. Its purpose is to quantify communications needs to obtain the basic requirements

for systems planners and engineers, including information concerning user locations, volume and types of traffic, and quality of service to be provided.

A critical element of mission analysis is the prediction of traffic volume. These predictions determine the required number of trunks, switching system size, and overall network configuration. A study of telecommunications systems indicates that voice traffic loads follow well-defined patterns. An understanding of the mission and users will indicate obvious peak loads, by time of day, days of the week, and times of the year. The accepted standard on which to base traffic projections is the "daily busy hour." Typically, this occurs during the late morning of working days, as shown by traffic load distribution charts.

Predictions of traffic volume for the design of new systems entail identifying communities of interest and surveying the users in these communities to determine their communications needs. Historical traffic records of similar systems will provide valuable input by indicating busy hour timing. The pattern of these statistics is known as Poisson distribution. The Poisson distribution is based on the randomness of events. It can be used effectively to calculate traffic loading for new systems, where no historical record is available from which to derive statistical traffic distributions.

The Poisson distribution can also be used in computer communications traffic engineering, since messages are likely to enter systems in random fashion and be of random length. However, statistics of computer data versus voice communications are not so well defined and are, in fact, variant depending upon application. Therefore, with regard to computer communications, the functions of mission analysis are to determine the following requirements:

a. Numbers of specific-length messages to be sent.

b. Times that messages are sent.

c. Response time requirements.

d. Computer processing time.

2.2.2 Geographic Requirements. The locations of the potential users of the communications system determine the geographic and network configurations of the system. This, in turn, will dictate to the designer the types of systems, transmit power, diversity protection, fade margin, path propagation requirements, and other criteria necessary for an effective system design.

One of the fundamental steps in traffic engineering is the identification of user communities of interest. A community of interest exists between users having a need to communicate with each other on a frequent basis. By determining the numbers and locations of the users within a community of interest, the traffic engineer is able to identify the number of facilities needed to service that area. It is implied here that the user community of interest is strategic in nature and will therefore be located in a fixed area. If the communications facility is to support a tactical-type operation, the user

community of interest may include changing geographic locations, and the impact on the system configuration will vary. In this case, the approach to system design must provide the flexibility to accommodate this movement. Therefore, the traffic engineer/system designer must be aware of the organizational and operational structure of the user for whom he is providing service.

2.2.3 Quality of Service. In digital communications, the basic performance parameter is bit error rate (BER). User tolerance will vary depending on whether the communication is voice or data. Voice transmission can tolerate a BER as high as 1×10^{-3}, but the nature of data equipment requires a reliability BER of 1×10^{-6} or greater. Military communications encompass virtually all communications types, although most requirements are handled by voice. Because various forms of data communications (computer data, teletype, etc.) are becoming more prevalent, the communications system must be designed to give a reliable BER performance of 1×10^{-6} or greater.

2.2.4 Throughput. The faithfulness with which information is transferred depends upon the design, engineering, and maintenance of the system. In digital communications, the basic interpretation of system performance is measured in terms of a single parameter, throughput. Throughput can be defined as the number of messages (message blocks, information bits, etc.) correctly transmitted and received per unit of time.

2.2.5 User Grading. The user of a communications system will grade it according to two concepts, reliability and availability. Both reliability and availability are mathematically defined in terms of probabilities. This allows for a "math model" to be developed during the design stage as an aid to the systems engineer.

a. Reliability

Reliability is the probability that a device or system will perform its intended function for a specified time period, under its prescribed operating conditions, given that it was operating properly at the start of the period. It is only valid for a specified period of operation, with the operational conditions as prescribed, and with the system operating properly at the start of the time period. The time period must be stated in order to give meaning to reliability, because it is a measure of operating time as compared to mean time between failures (MTBF).

The use of reliability as a rating factor is associated with the need for a device or system to function properly over a specified time period, when the operation is of a critical nature. Reliability is not a practical measure of quality for a continuous service system; it is most meaningful when the mission period is short in relation to the system MTBF. It is extremely useful when addressing special operating periods of a continuous service system, such as the scheduled test operation of a weapons system. Reliability can be used to assess the chances of completing this scheduled test operation without a communication system failure. It can also be used to assess the requirement for on-site maintenance during critical scheduled activities.

b. Availability

Availability is the probability that a device or system will operate properly when called upon at any randomly selected time. The concept of availability supplies the means of determining the probabilities that a system will be up and ready for operation when required. Probability, in this case, refers to the number of times, out of a specified number of trials, that the device will be able to support a mission period; i.e., that it will not be in a failed state at the start of the mission period.

Availability of a device or system provides a measure of the likelihood that it will be operating properly at the start of any randomly selected mission period. In a sense, availability complements reliability, in that both are closely associated with the success of a mission. A balance is usually required between the two parameters, and this introduces the concept of system effectiveness. System effectiveness, a combination of reliability and availability, is the probability that a system will enter and complete a mission period and is, therefore, a meaningful concept to the user.

2.3 User Requirements. The user of a communications system has the responsibility to provide certain basic information that will clarify his communications requirements. This information will impact heavily on the design planning of a new system and will assist the systems engineer in determining necessary extensions and/or modifications to existing facilities.

2.3.1 Intelligence to be Moved, Communications Objectives. To establish the variety and type of intelligence to be moved and the communications objectives, the following facts must be established:

a. What is the reason for the communication, or what is the use that will be made of the information at the receiving end?

b. Will the communications require use of simplex or duplex circuits?

c. If the required service is other than voice, what minimum amount of intelligence is required to successfully interpret the information at the receiving terminal?

d. What amount of time can be tolerated to successfully transmit and receive the above information? Defining the information in relationship to transmission time limitations will, in general, define the bandwidth requirements of the system.

e. Is the intelligence to be moved in real time, or will a store-and-forward system meet the objectives (i.e., does the requirement dictate a continuous transmission)?

2.3.2 Traffic Analysis. In order to determine the amount of intelligence the system must handle, it is necessary to analyze the traffic volume and distribution patterns. The system designer should furnish to the user a definition of a communications unit that can be used throughout the traffic analysis. Separate units must be defined for each type of service: data, telephones, teletype, etc.

2.3.3 Required Quality, Grade of Service (GOS) and Reliability. In order to determine how good the communications service must be, the minimum acceptable level of intelligence and GOS must be established. Each basic type of communications service has established quality factors and standards of measurements. The required criterion of acceptability can be specified by referencing existing standards of performance that pertain to the particular class of communications and modifying these standards to suit the given objectives. The GOS refers to the quality of an established connection as well as to the probability of the connection being available when required.

2.3.4 Operating Requirements. The operating requirements and schedule of operations must be established with some degree of accuracy. This will impact heavily on the "system effectiveness" described above.

2.3.5 Geography of the System. The geography or physical extent of the desired communications services will determine whether existing facilities will support the user requirements. It will also impact on the requirements of alternate routing schemes. A network layout should also include possible future expansion plans of the user sources and destinations.

2.3.6 User Equipment Interface. If the user has equipment that must interface with existing or planned communications systems, the following information must be established:

a. Determine the locations of intersystem interfaces.

b. Identify the interfacing systems.

c. Determine what standards and specifications apply to the interfacing systems.

d. Identify the end-to-end performance parameters when the user equipment is to be a link of the circuit.

e. Identify the interface criteria, to include control lead and signal lead connector arrangements.

f. Identify the line protocols of the interfacing systems.

The system must then be designed to match all parameters of the interfacing systems, using special interface circuitry and devices where required. In summary, it is the requirement of the user to provide maximum information on the support requirements, types and classes of service, and geographic locations to ensure that all areas of communications support are considered. The systems engineer and/or traffic analyst must work to ensure that the user is cognizant of the user information that is necessary to establish a firm data base of communications requirements.

3.0 SYSTEM DESIGN

3.1 System Constraints. The digital microwave system, to be useful when designed, must be based on available devices and techniques. Operational requirements usually require a system design approach based on techniques and hardware that have been proven and are compatible with presently installed equipment. This approach is not meant to inhibit the advance of the state of the art or discourage innovation. New devices and techniques made available through development can be incorporated into later models when shown to be cost effective.

3.2 System Architecture. At the time this Digital Microwave System Design Guide task was started (1979), the Kwajalein Missile Range (KMR) was faced with the choice of adopting the triservice Digital Radio and Multiplexer Acquisition (DRAMA) system or a state-of-the-art commercial system to be manufactured from a performance specification. The DRAMA system had not been tested and evaluated for applicability by any of the members or associate member ranges of the Range Commanders Council (RCC) at the time the KMR was required to decide on the system design. Detailed comparisons were made between the specifications for typical state-of-the-art commercial digital microwave communications equipment and the DRAMA system. Taking into consideration delivery times, flexibility requirements, and other aspects pertinent to KMR, the state-of-the-art commercial system was selected.

Another digital microwave system was being procured by the Pacific Missile Test Center (PMTC) during the period this design guide was being prepared (1980-1981). The system architecture and an overview of the system design considerations that entered into the decision to procure the Rockwell International system are discussed in appendix A.

3.2.1 Communication Security. One of the characteristics of military communications that impacts heavily on both cost and time in network organization is the need for communications security (COMSEC). Although this section is primarily concerned with the electrical/electronic compatibility of integrated systems, it is necessary to discuss briefly some additional considerations related to COMSEC. Four aspects of COMSEC are physical, compromising emanations, cryptographic, and transmission security. Each will be given brief attention here.

a. Physical Security

Physical security is a facility consideration that addresses limiting or controlling the personnel access into areas where crypto equipment is operational. The extent of protection required depends upon the nature, size, and location of the communications facility. The need for COMSEC limits the posible geographic locations of network points to installations that can be physically secured against intrusion. Physical security considerations are presented in NACSIM 5203 and applicable service guidelines.

b. Compromising Emanations Security

Electronic and electromechanical systems used in the handling and transmission of data are prone to acoustical and electromagnetic emissions that may be received by undesired persons. The concern over such emanations is determined

by the classification of the information to be handled. The final system definition is the result of tradeoffs between equipment and facility design; emanations may be restricted to prescribed limits by the effective combinations of the two. The objectives of the TEMPEST program are to measure such emanations, determine the extent to which they contain usable information, and define those steps necessary to correct site deficiencies. When engineering for on-line encryption devices, careful consideration must be given to the directives of NACSIM 5203 regarding the RED/BLACK interface.

c. Cryptographic Security

The purpose of cryptographic security is to avoid unauthorized disclosure of message traffic during transmission. On-line crypto operation provides real-time protection to traffic transmission.

d. Transmission Security

Transmission security protects all message traffic from interception and deception. For electrical communications, transmission security is provided by adherence to those equipment installation criteria presented in NACSIM 5203. On operating crypto systems, transmission security is provided by constant attention to circuit discipline and message handling techniques.

Of equal importance and concern to the design engineer of COMSEC facilities is the power and cabling interface to the crypto systems. Power used to supply crypto facilities may require special filtering in order to maintain communications security. Wiring and cabling techniques, as well as power lines and grounds, are subject to special treatment, as detailed in NACSIM 5203.

The heart of all crypto systems is the key generator (KG). The KG acts on the serial, digital representation of the message traffic, scrambling this message according to a predetermined code that is available in the KGs at both ends of the circuit. Some crypto devices are equipped with interface circuitry that will convert message traffic from analog to digital, if required, as in the case of voice encryption. This is normally accomplished in a two-step pulse amplitude modulation/pulse code modulation (PAM/PCM) conversion at the transmitting device, with restoration to analog at the receiving device. The crypto device is transparent to the digital transmission medium and the information user, adding no additional bandwidth requirements other than that inherently associated with the digital representation of an analog signal.

Crypto devices are basically designed for two types of applications: end-to-end and bulk encryption. End-to-end encryption devices provide a dedicated, secure transmission circuit from the originator to the terminal end user. This type of circuit is treated as unclassified in its application to the transmission medium. The devices are operationally and key compatible at both source and sink. Bulk encryption devices operate on the multiplexed signals of a number of channels. These devices are normally located at the telecommunications centers and are end-to-end compatible (source and sink) over the transmission medium. If interim breakout of data is necessary, as at a repeater, the complete data stream must be deencrypted and reencrypted for transmission to the next location.

Network synchronization implies that all terminal devices that are interconnected operate from a common time base. Crypto units, as a part of the network, also require this common timing. Due to the classified nature of the crypto systems and their interface specifications, no details will be presented here. Suffice to say that the input timing synchronization, data, and master station clock follow closely the requirements of MIL-STD 188-114.

Various types of COMSEC devices are available to meet a myriad of security applications. Each system has its own salient characteristics. Therefore, the transmission system engineer who has secure communications requirements should seek assistance from his appropriate branch of service or from the National Security Agency, Fort Meade, Maryland.

3.2.2 Diversity Plans. In microwave system engineering and design, diversity is a method of improving the radio frequency (RF) received signal and providing redundant paths. Depending on the type of diversity used, full or partial testing is possible while transmitting and receiving radio traffic. Presented are two basic types of diversity, frequency and space, as well as combinations of the two. Each has its advantages and disadvantages.

Space diversity is accomplished by using two receivers, with the antennas vertically or horizontally separated by some multiple of the received frequency's wavelength. The major advantage of space diversity is that it requires only one frequency to implement. As the RF environment becomes more congested, this becomes a very attractive characteristic. The major disadvantage is that the link using this diversity scheme must be shut down in order to be tested.

Frequency diversity, on the other hand, requires a minimum of two frequencies in order to operate. In many frequency-congested areas this is not possible. The major advantage of frequency diversity is that it allows a radio link to be fully tested without interrupting traffic. Both frequency and space diversity provide a measure of equipment or path redundancy.

Figures 3-1 through 3-4 show the two basic diversity methods and some of their variations. The methods illustrated are, in sequence by figure:

a. Space diversity - hot standby transmitters.

b. Space diversity - no standby.

c. Space and frequency diversity.

d. Hybrid diversity.

Hot standby space diversity provides automatically switched transmitters. It gives full equipment redundancy (excluding antennas and waveguide). However, this arrangement does not provide separate end-to-end operational channels. That is, radio traffic must be interrupted to perform link testing.

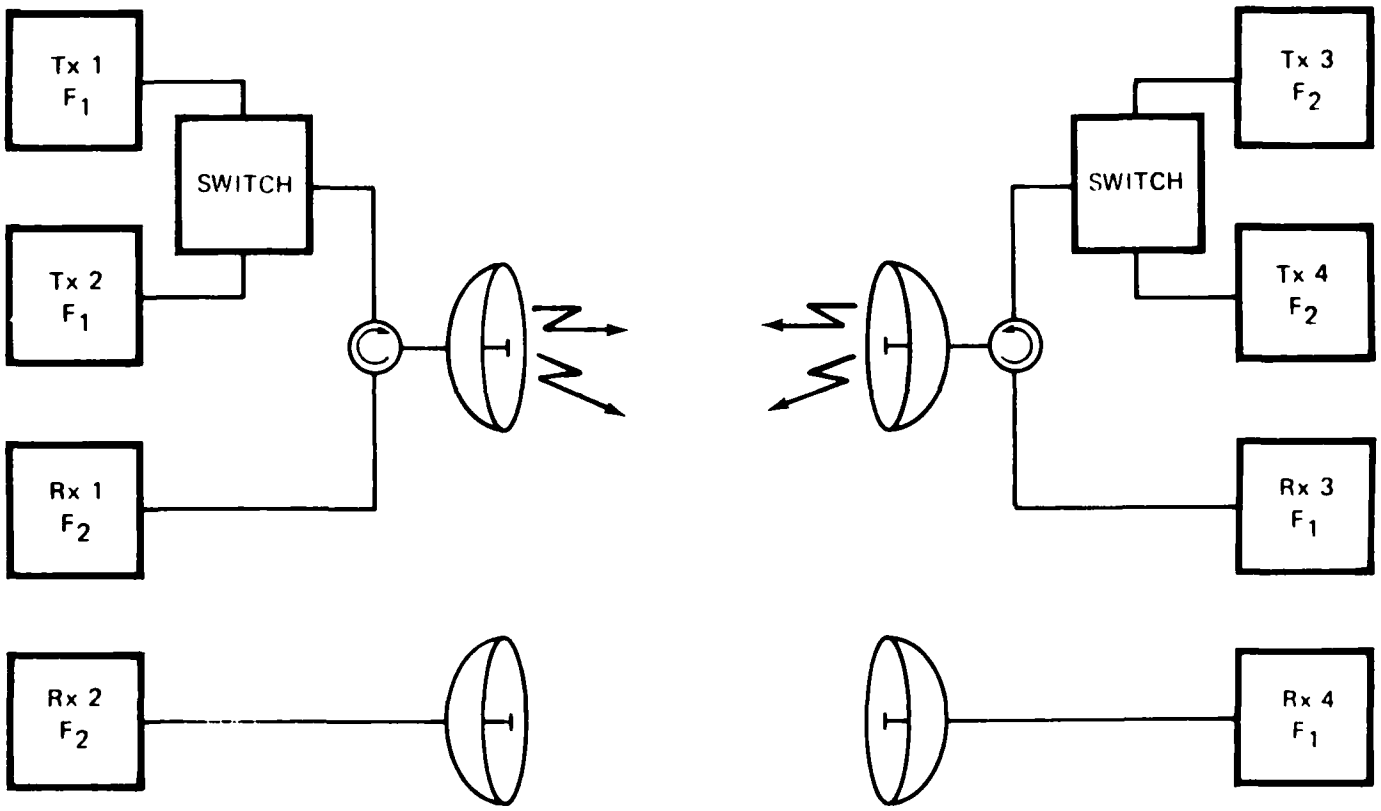

Figure 3-1. Space diversity--hot standby transmitters.

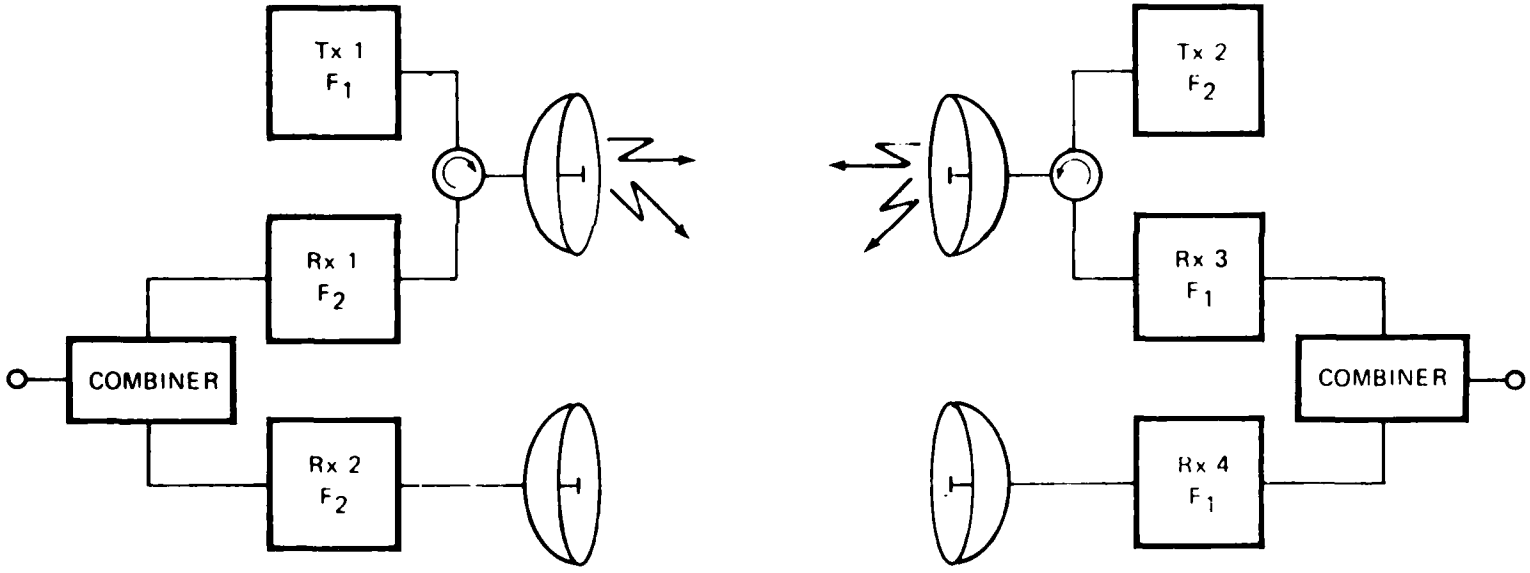

Figure 3-2. Space diversity - no standby.

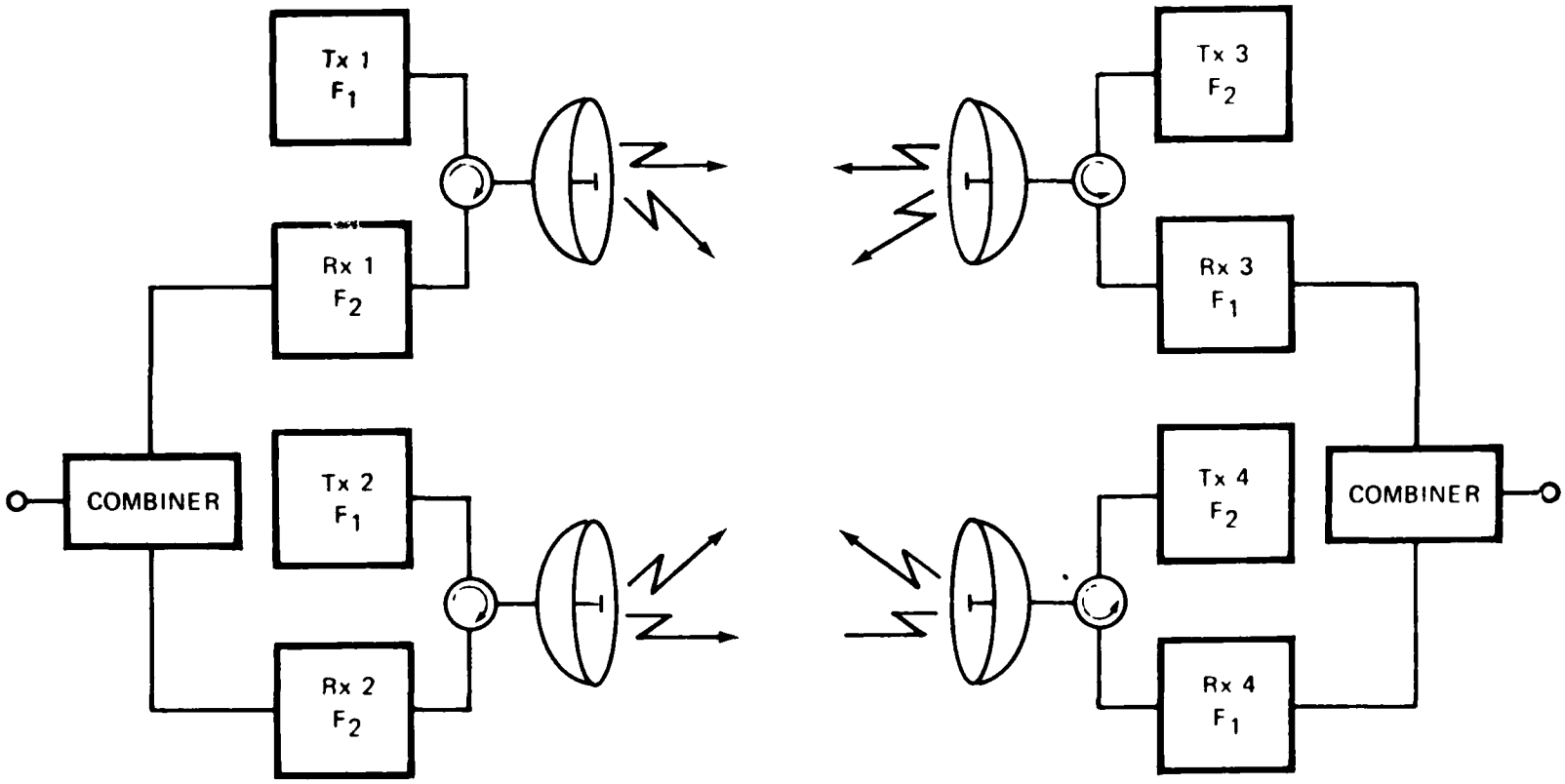

Figure 3-3. Space and frequency diversity.

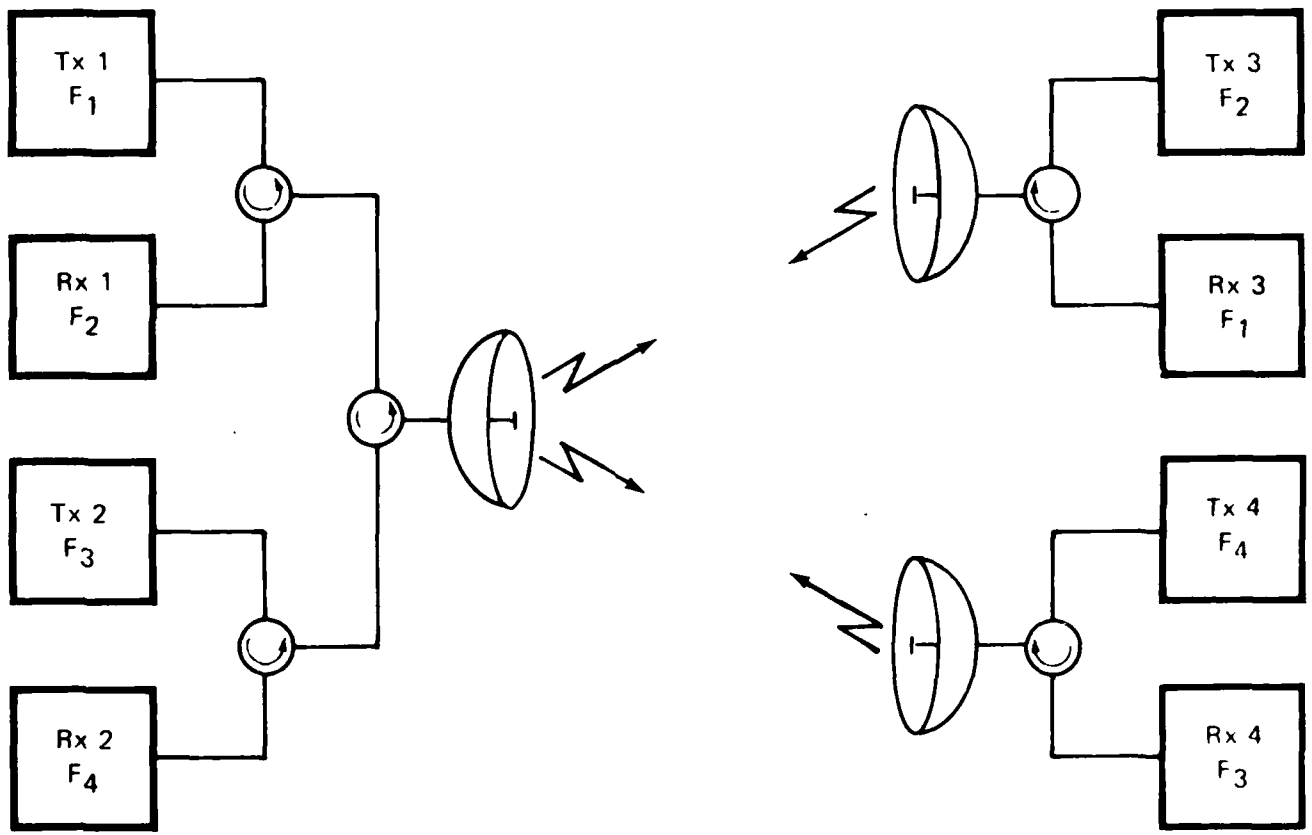

Figure 3-4. Hybrid diversity.

Frequency diversity also provides complete equipment redundancy. (This does not include antennas and waveguide if one antenna is used.) In addition, this type of diversity also provides two separate end-to-end paths for testing. The link can be fully tested (excluding waveguide and antennas) even while traffic is being transmitted.

Of all the types of diversity, the most elaborate is a combination of frequency and space diversity, also called quad-diversity. This arrangement involves two frequencies and two antennas at each site. It creates two totally independent end-to-end paths, allowing a test team to completely test the system without interrupting traffic.

Another method of diversity, though not in widespread use, is hybrid diversity. This involves two antennas at one end, one at the other, and the simultaneous use of two frequencies. Both transmitters and receivers on one end use one antenna, but each transmitter and receiver pair on the other end uses a separate antenna (see figure 3-4).

Availability is defined as the amount of time (A) a link is operating properly during a specific period of time (T), divided by that specific period of time, or (A/T) x 100 percent. A is time available (hours) and T is period of time over which available time is measured. For instance, if a microwave link worked 10 hours out of a 20-hour period, its availability would be 50 percent. On the other hand, if it were available 19.97 hours out of 20, the availability would be 99.85 percent. The greater the system availability, the better the system.

Each diversity scheme has its own availability. The availability of the link is a result of factors such as antenna separation, frequency separation, transmission power, and antenna gain. Consequently, the type of diversity used should be determined by the required availability. The goal in diversity is to increase the availability. Generally, the combination of frequency and space diversity is the most expensive and provides the best availability. However, it is not always practical or affordable.

3.2.3 Multiplex Plans. The basic methods used for digital transmission are discussed in the following paragraphs.

3.2.3.1 Time Division Multiplexing Fundamentals. Time division multiplexing (TDM) or digital multiplexing is the simplest form of multiplexing in existence today. Figure 3-5 shows the basic concept used for TDM. Instead of separating each voice frequency (VF) channel in frequency, each one of the channels shares the transmission medium in time by using sampling techniques, encoding each sample, and interleaving the pulse trains.

3.2.3.1.1 Modulation Techniques. In order to multiplex by time division, VF signals must be changed to some form of pulse modulation. Five of the most common methods of pulse modulation are

a. Pulse amplitude modulation (PAM).

b. Pulse duration modulation (PDM).

c. Pulse position modulation (PPM).

d. Pulse code modulation (PCM).

e. Delta modulation (DM).

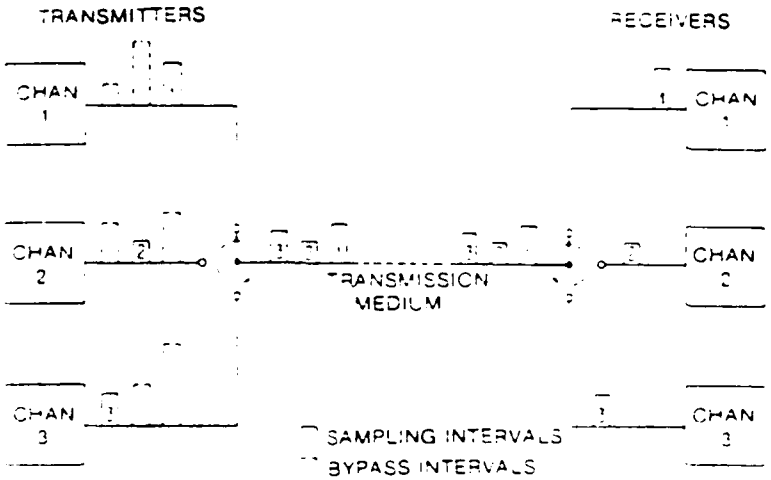

Figure 3-5. Time division multiplexing.

Of these five methods, the two most frequently used with TDM transmission are PCM and DM. PCM is the most widely used means of multiplexing and is therefore discussed in depth in paragraph 3.2.3.2. The five techniques are briefly described in the following paragraphs, and figure 3-6 illustrates the five methods.

a. Pulse Amplitude Modulation (PAM)

In PAM, the amplitude of each pulse represents the amplitude of the modulating wave at a specific instant in time. PAM is a preliminary step used in constructing PCM. PAM is a simple method, but is quite susceptible to noise in the transmission medium. Because the signal intelligence is represented by the pulse height, a small amount of noise can change the pulse height enough to affect the signal intelligibility.

b. Pulse Duration Modulation (PDM)

In PDM (often called pulse-length modulation or pulse-width modulation), the instantaneous value of the modulating wave is represented by the width of the pulse.

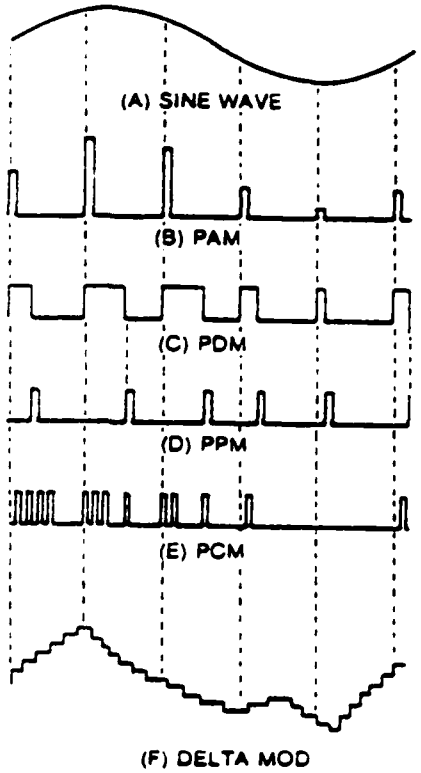

NOTE: STEPPING RATE IS CLOCK-DEPENDENT AS ILLUSTRATED BY FIGURE 3-7.

Figure 3-6. Types of modulation employed.

c. Pulse Position Modulation (PPM)

In PPM, all pulses are the same size and the same shape. The instantaneous value of the modulating wave displaces the pulse from its normal position by an amount proportional to the amplitude of the modulating wave.

d. Pulse Code Modulation (PCM)

In PCM, the message is sampled periodically and the values observed are coded into arrangements of binary digits (bits). The transmission of these bits has a broad tolerance to transmission system noise and distortion.

e. Delta Modulation (Differential PCM)

Delta modulation, or differential PCM, is the most straightforward method of encoding a voice channel for transmission. The sample rates used are higher

than standard PCM, i.e., >8000 Hz for voice frequencies. Each sample amplitude is compared to the prior sample to establish a binary digit for that clock period, as shown in figure 3-7. Generally speaking, delta modulation is used at lower bit rates than PCM and thus provides increased channel capacity, much simpler circuitry, and lower cost. As illustrated in figure 3-7, the quality of the output digital signal is dependent upon the relation of the clock rate to the frequency of the input signal.

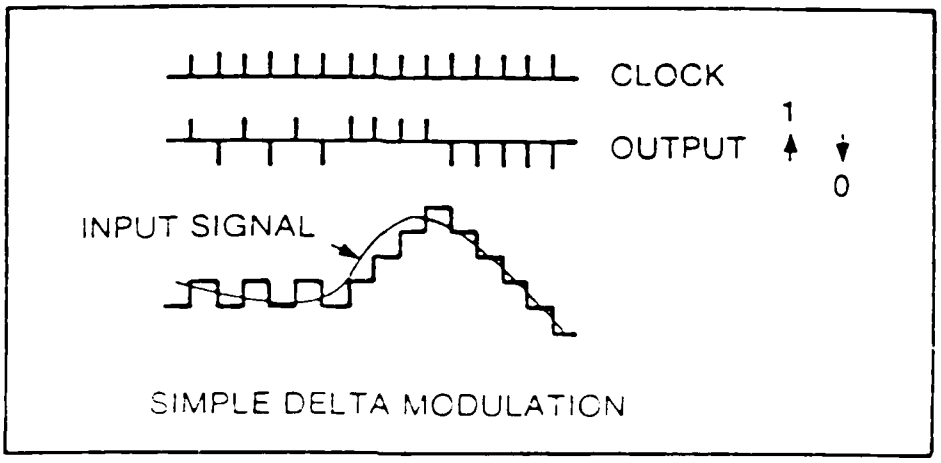

- STRAIGHTFORWARD CIRCUITRY
- LOW COST
- LIMITED HIGH-FREQUENCY/HIGH-AMPLITUDE RESPONSE FOR MODERATE CLOCK RATES

Figure 3-7. Delta modulation or differential PCM.

3.2.3.1.2 TDM Hierarchy. The buildup of tiers of TDM is called the digital hierarchy and has been established for North America by the Bell System. Table 3-1 and figure 3-8 show bit rates and voice channels used, which are comparable to the group, supergroup, mastergroup, and jumbo group of analog multiplexing. This digital hierarchy is established in conjunction with PCM because of its wide usage in TDM today. Note the multiplexer scheme used in transition from T-1 to T-2 (DS-1 to DS-2) or DS-2 to DS-3.

TABLE 3-1

PCM BIT RATES

Bit Rate (Mb/s)	Number of T Streams	Voice Channels	WECo Name
1.544	1	24	DS-1 Digroup
3.152	2	48	DS-1C (Two Digroups)
6.312	4	96	DS-2 Supergroup
38.345	24	576	1/2 FCC 1152 Channel
44.736	28	672	DS-3 Masterdigroup
274.176	168	4032	DS-4 Undesignated

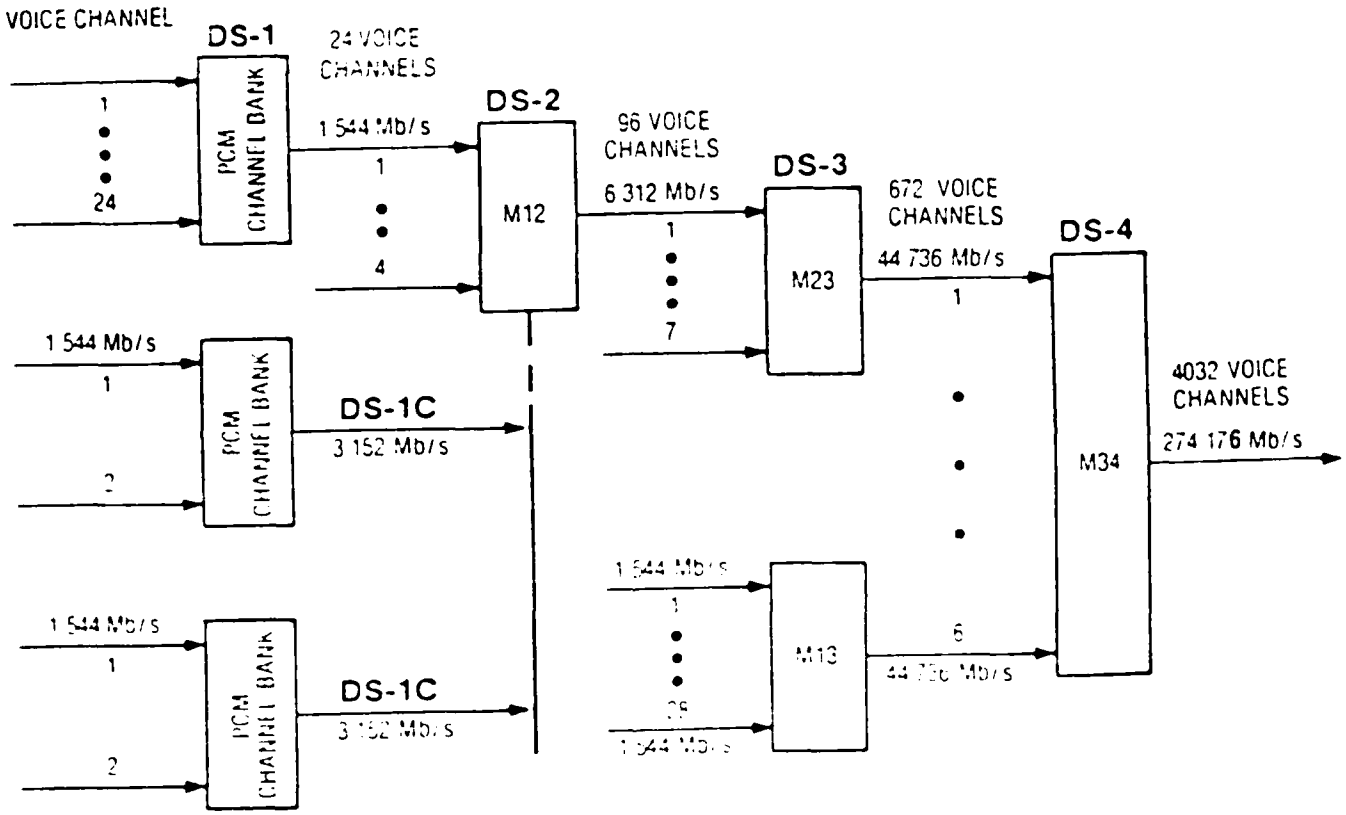

Figure 3-8. CCITT North American PCM hierarchy.

At present, DS-1 and DS-3 are the CCITT North American standards and, therefore, present the most logical choices for multiplex radio interface. DS-4 (T-4) is currently being used in some applications involving fiber optics. Table 3-1 is provided for quick reference to the standard PCM bit rates in use today.

The 3.152-Mb/s signal, designated as DS-1C, consists of two 24-channel PCM digroups and constitutes a unique signal generated by only certain manufacturers of channel bank units (ITT does currently supply M12 multiplex).

An elementary digital multiplex system, such as an M12, M13, or an M23 multiplexer, would have the output series stream bit rate at exactly the algebraic sum of the input parallel bit rates. However, this mode of operation can neither accommodate variations or clock tolerances in the parallel streams nor provide for framing. Both these features are necessary in practical service. Therefore, in digital multiplexers the output bit rate is always somewhat higher than the sum of the input rates at their maximum tolerance. The excess bit time slots are called overhead and are used for various housekeeping functions, as shown in figure 3-9.

As each tier of multiplexing builds up, it must have more elaborate frame formats to keep the receiving terminal in synchronization. A control word must be included to indicate to the receiver which bits are overhead and are to be discarded when clocking out the traffic signals. To accommodate the variations in the parallel stream rates, a scheme of "stuffing" or justification is used (see figure 3-9). Stuffing bit slots are time slots in which an overhead bit stream may be inserted if there is not a bit ready to be clocked out of the next channel register. The control word indicates which of the time slots contains a stuffing bit that must be removed at the end terminal. Obviously, this feature creates an empty time slot at the receiver, which is accounted for by an elastic storage register and smoothed output clock so that a continuous information bit stream results.

The concept of pulse stuffing, as it relates to the DMX-13B upper-level muldem, is described in more detail in paragraph 3.2.5, Hardware Realization/Design Considerations.

3.2.3.1.3 Other Considerations. Another point especially noteworthy is that of the various waveforms used in the TDM system today. Figure 3-10, taken from the Interrange Instrumentation Group (IRIG) 106-77 document, provides a summary of the various waveforms commonly encountered in digital communication systems. The bipolar output format encountered in standard T-1 transmission is not shown, however, in figure 3-10. This waveform, in a non-return-to-zero (NRZ) format, places the majority of the energy in the transmitted pulses at one-half the pulse repetition frequency. This concept is illustrated in figure 3-11.

The multiplexer or channel bank unit performs all logic operations in a unipolar PCM format. In a unipolar format, PCM pulses make only positive transitions from the baseline. The appropriate multiplexer output circuit then converts the unipolar PCM signal to bipolar for external interface purposes.

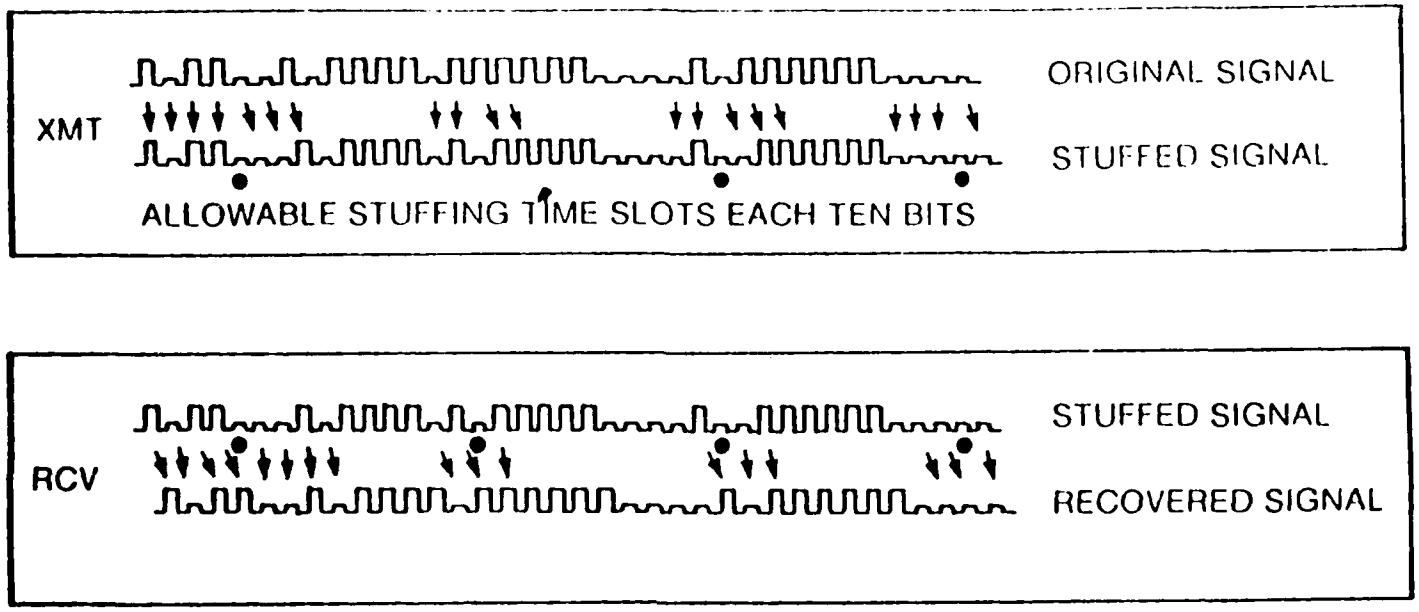

- RECOVERED SIGNAL CLOCK MUST BE SMOOTHED TO ELIMINATE JITTER CAUSED BY REMOVED TIME SLOT
- DATA IS STORED IN ELASTIC STORAGE REGISTER
- CONTROL WORD AT FRAME TIME ADVISES RECEIVE TERMINAL WHICH ALLOWABLE SLOTS WERE USED FOR STUFFING
- RADIO TERMINAL, AS WELL AS DIGITAL MULTIPLEX, USES STUFFING PRINCIPLE

Figure 3-9. Stuffing principle.

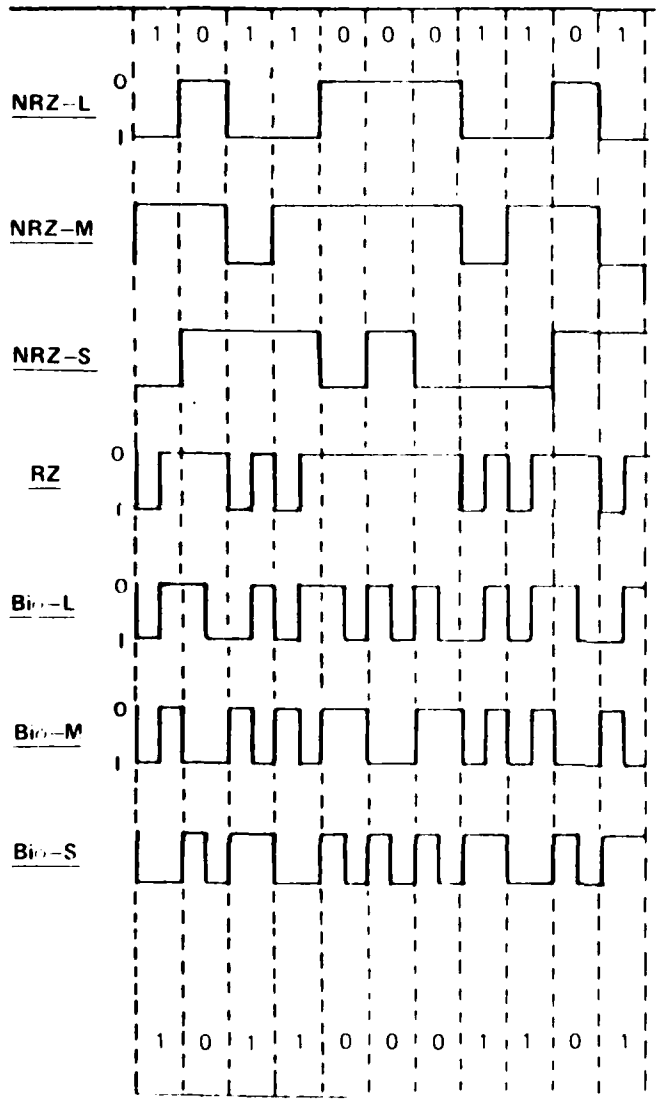

NRZ Level (or NRZ Change)
One is represented by one level.
Zero is represented by the other level.

NRZ Mark
One is represented by a change in level.
Zero is represented by no change in level

NRZ Space
One is represented by no change in level.
Zero is represented by a change in level

Return to Zero
One is represented by a negative level.
Zero is represented by no change in level.
Signal always returns to zero during each bit period.

Biphase Level (or Split Phase, Manchester II + 180°)
One is represented by a 10
Zero is represented by a 01

Biphase Mark (or Manchester 1)
A transition occurs at the beginning of every bit period
One is represented by a second transition 1/2 bit period later
Zero is represented by no second transition.

Biphase Space
A transition occurs at the beginning of every bit period.
One is represented by no second transition
Zero is represented by a second transition 1/2 bit period later

(taken from IRIG 106-77)

Figure 3-10. PCM waveforms.

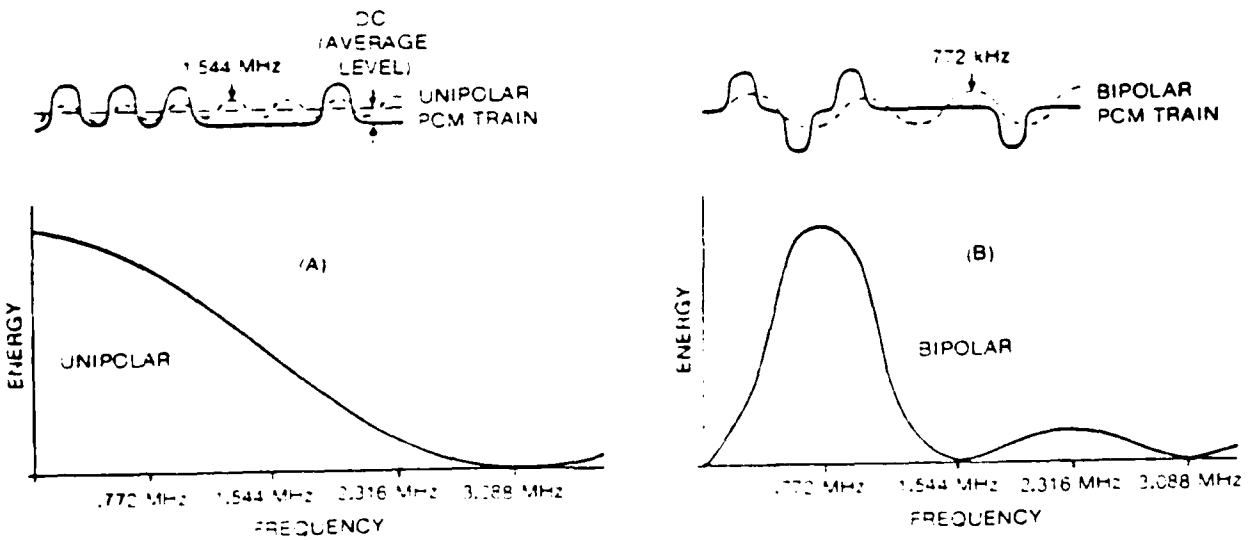

Figure 3-11. Energy spectra comparison of unipolar and bipolar pulse trains.

As shown in figure 3-11 (B), in a bipolar format pulses are transmitted alternately in positive-going and negative-going directions with respect to the zero voltage baseline, regardless of the number of intervening no-pulse time slots. The bipolar signal is 6 volts peak-to-peak and has the following advantages over unipolar:

a. It halves the frequency at which the principal energy component occurs. Compare figure 3-11 (A) and (B). The principal energy component of bipolar occurs at 772 kHz rather than 1.544 MHz. The transmitted bandwidth is effectively reduced from 3.088 MHz to 1.544 MHz.

b. Because the bipolar pulses alternate, the signal has no direct current (dc) component. This allows intervening components, such as regenerative repeaters, to be transformer-coupled to the line.

c. Violations of the bipolar format are easily detected.

The minimum bandwidth that a pulse of some fixed width can pass through and still get to its full amplitude is called the Nyquist bandwidth. Consider an alternating NRZ bit stream or square wave of some frequency, as shown in figure 3-12. If this square-wave voltage were applied to a Gaussian low-pass filter that could be tuned and if the output were examined, the square wave would reduce to a trapezoid wave and finally to a sine wave as the filter bandwidth was reduced (see, for example, figure 3-13). A critical point would be found where the sine wave would start to reduce in amplitude as further band limiting was applied. This point defines the Nyquist bandwidth and assumes no phase delay variation in the filter.

When a filtered random data stream is displayed on an oscilloscope that has been adjusted to show several clock periods, the picture is called an "eye pattern." It consists of an upper horizontal line representing a "1," a lower line representing a "0," and several crossings representing transitions. Examples of eye patterns are illustrated in figures 3-14 and 3-15.

Monitoring the eye pattern is an excellent way to observe the quality of a digital signal. If impairments (such as insufficient bandwidth, phase or delay nonlinearities, or noise) are introduced, the eye will start to fill in and the picture will blur. Closing of the eye indicates impairment of the digital signal in the transmission medium. Blurring of the eye is caused by impairments other than noise (called intersymbol interference) and reduces the noise tolerance or error threshold of the system.

A special case of controlled intersymbol interference is sometimes used. In the example above, consider that the band limiting continued until it reached exactly one-half of the Nyquist bandwidth. In this case, it would take two adjacent like symbols (square-wave element of one-half frequency) for the output voltage to reach either a maximum or minimum. Alternating symbols would remain near the center between the maximum and minimum voltage, which creates a three-level signal occupying one-half the bandwidth that can be resolved at the receiving end by 1 bit of storage and differential comparison. This technique (illustrated in figure 3-16) is called partial

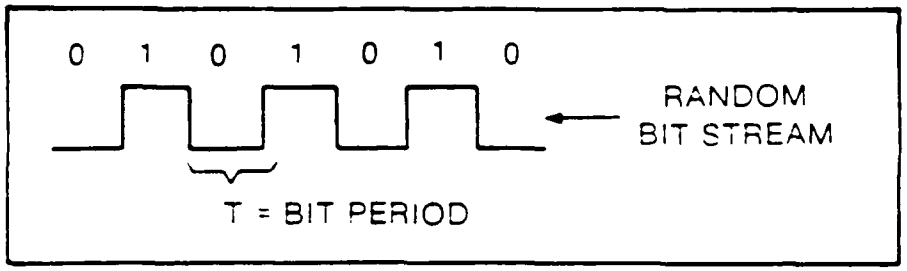

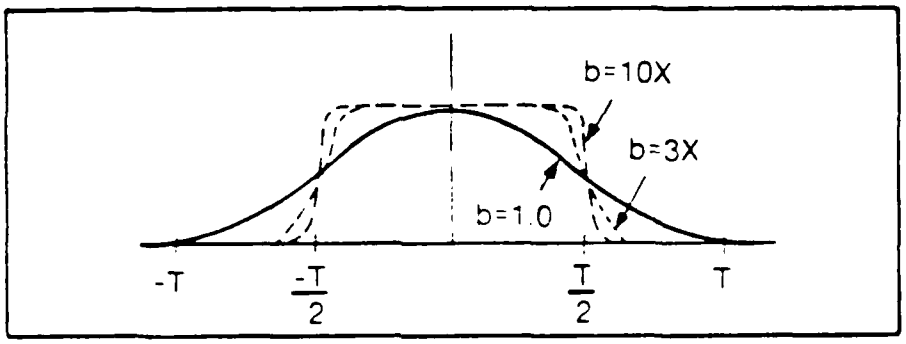

- BANDWIDTH NARROWED = EFFECT ON PULSE SHAPE
- NYQUIST BANDWIDTH = CRITICAL BANDWIDTH THAT ALLOWS PULSE TO JUST GET TO UNIT HEIGHT

Figure 3-12. Bandwidth and pulse shape.

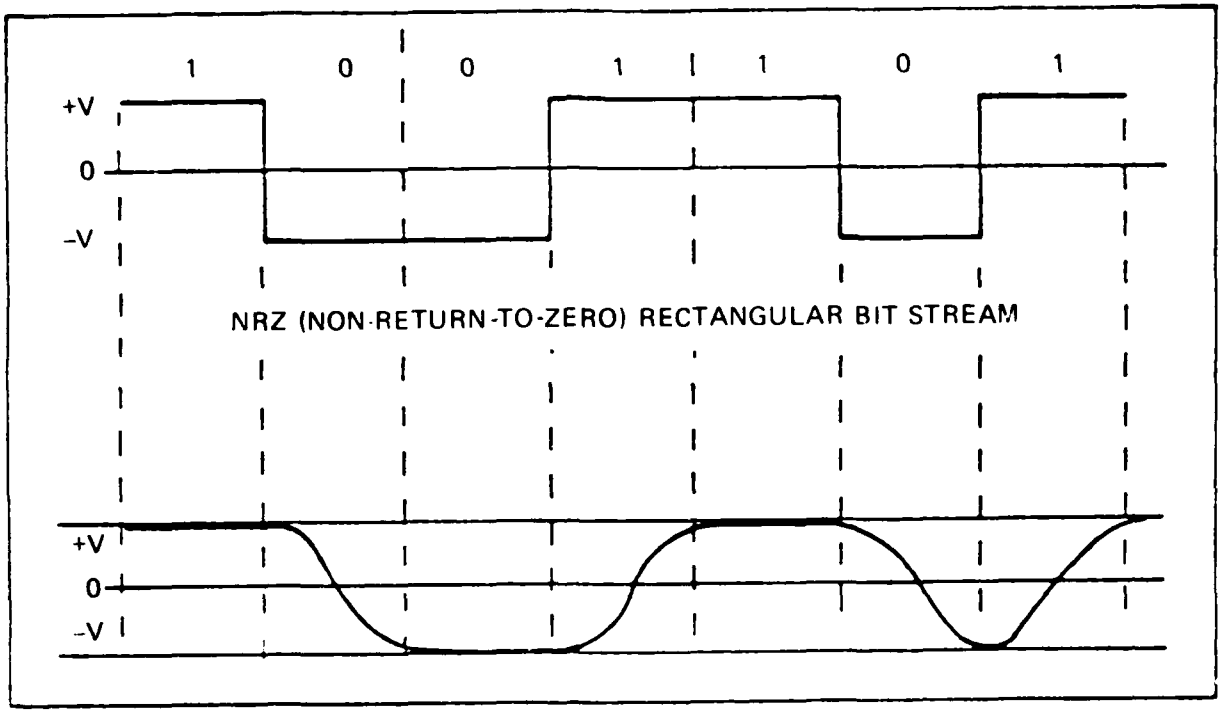

- PULSE SHAPE OF NRZ SIGNAL AFTER PASSING THROUGH NYQUIST BANDWIDTH FILTER

Figure 3-13. Filtering on pulse shape.

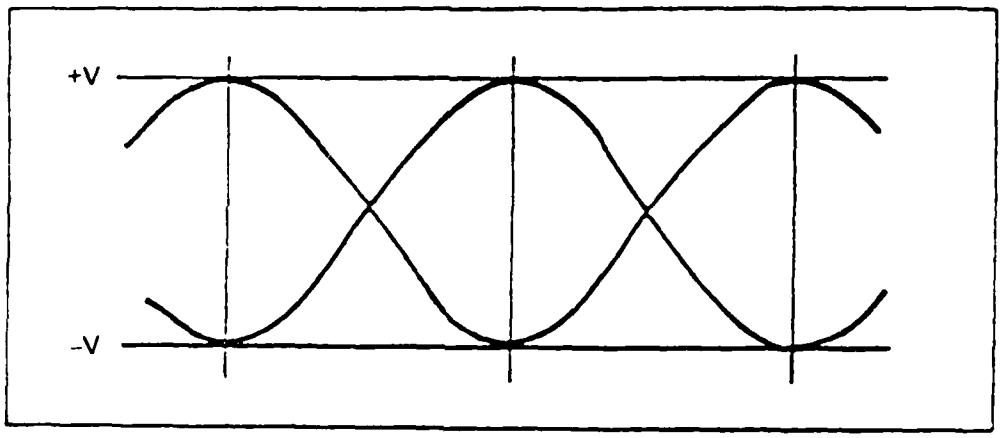

- WHEN SEVERAL CLOCK PERIODS OF NYQUIST-FILTERED RANDOM DATA ARE DISPLAYED ON AN OSCILLOSCOPE, THE RESULTING PICTURE IS CALLED AN "EYE PATTERN"
- AS NOISE IS ADDED TO THE DATA SIGNAL, THE EYE PATTERN WILL "SQUINT" OR START TO CLOSE AT CLOCK PERIOD TIMES
- PULSE DISTORTION DUE TO FILTERING AND DELAY CAUSES EYE TO BLUR AND IS KNOWN AS INTERSYMBOL INTERFERENCE

Figure 3-14. Eye patterns.

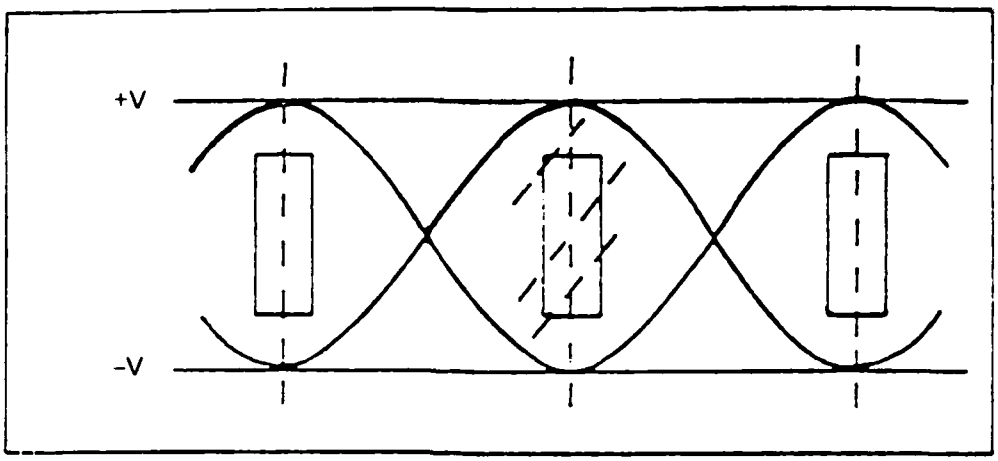

- AN EYE PATTERN DETECTOR IS A TIME-GATED VOLTAGE SENSOR THAT LOOKS FOR SIGNALS NOT AT MINIMUM OR MAXIMUM VOLTAGE
- IF EYE PATTERN TRANSGRESSIONS ARE COUNTED AND INTEGRATED A PREDICTION OF PROBABLE ERROR RATE PERFORMANCE CAN BE MADE WITHOUT KNOWLEDGE OF INFORMATION CONTAINED IN DATA STREAM

Figure 3-15. Eye pattern detector.

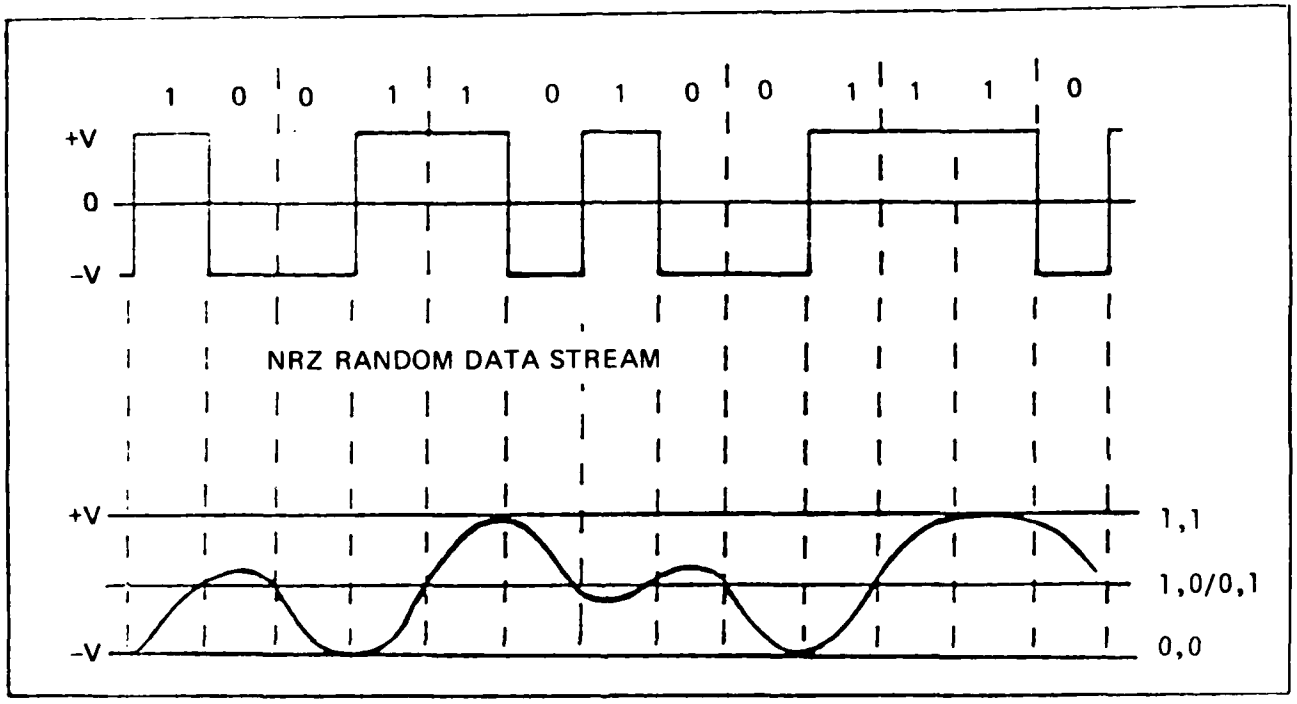

- SIGNAL WHEN PASSED THROUGH 1/2 NYQUIST BANDWIDTH FILTER
- GENERATES A 3-LEVEL VOLTAGE SIGNAL AND A 4-LEVEL LOGIC SIGNAL
- ONE PERIOD OF DIFFERENTIAL NEEDED TO RESOLVE AMBIGUITY OF MIDDLE SIGNAL LEVEL
- CONTROLLED INTERSYMBOL INTERFERENCE

Figure 3-16. Partial response filtering.

response filtering and can be used to conserve bandwidth when modulating a linear transmission system with a digital signal. An extension of multilevel signaling to seven levels may be used to reduce the required bandwidth of the 1.544-Mb stream to about 400 kHz. This signal is then inserted into the lower 500-kHz baseband spectrum of an FM/FDM system, and is called data under voice (DUV).

The partial response method of transmission is especially suitable in applications in which less than 192 PCM channels are used. Referring to figure 3-16, the center level ambiguity indicating either 1,0 or 0,1 can be resolved by merely observing the previous value to see if a logic 1 or logic 0 existed. The partial response technique as applied to radio interface and transmission is further discussed in paragraph 3.2.3.3.

3.2.3.2 Pulse Code Modulation (PCM). PCM is used for the generation of a serial bit stream that represents the digitization of a group of voice circuits, along with their supervision or signaling in the North American DS hierarchy.

This signal is at 1.544 Mb/s; is made up of 24 VF channels that have been sequentially sampled, encoded, companded, and framed; and is known as the DS-1 or digroup signal.

PCM requires more bandwidth than amplitude modulation, but it uses the bandwidth more efficiently than any other modulation method in overcoming noise and distortion factors. Figure 3-17 shows the principle of converting one of the 24 voice signal inputs into the digital PCM sample. Each of the 24 voice channels is sampled sequentially 8,000 times per second.

By sampling each channel at 8 kHz, a frequency which is greater than twice the 3.1-kHz bandwidth of a voice channel, good fidelity is ensured even at the upper limits of the channel. Figure 3-18 demonstrates the principle of sequentially sampling each of the 24 channels.

This sampling operation produces a pulse amplitude modulated (PAM) signal in which the sampled amplitudes from all 24 channels occur sequentially every 125 microseconds (refer to figure 3-17). Each PAM pulse is then coded into a digital 8-bit word by quantization.

In order to minimize the distortion of lower level signals, the PAM samples are digitally encoded according to a μ-law compression scheme. This method of compression, illustrated graphically in figures 3-19 and 3-20 and applied in figure 3-17, is comparable to emphasis in FM/FDM systems.

This compression law is defined by

$$|y| = \frac{\ln(1+u|x|)}{\ln(1+u)}$$

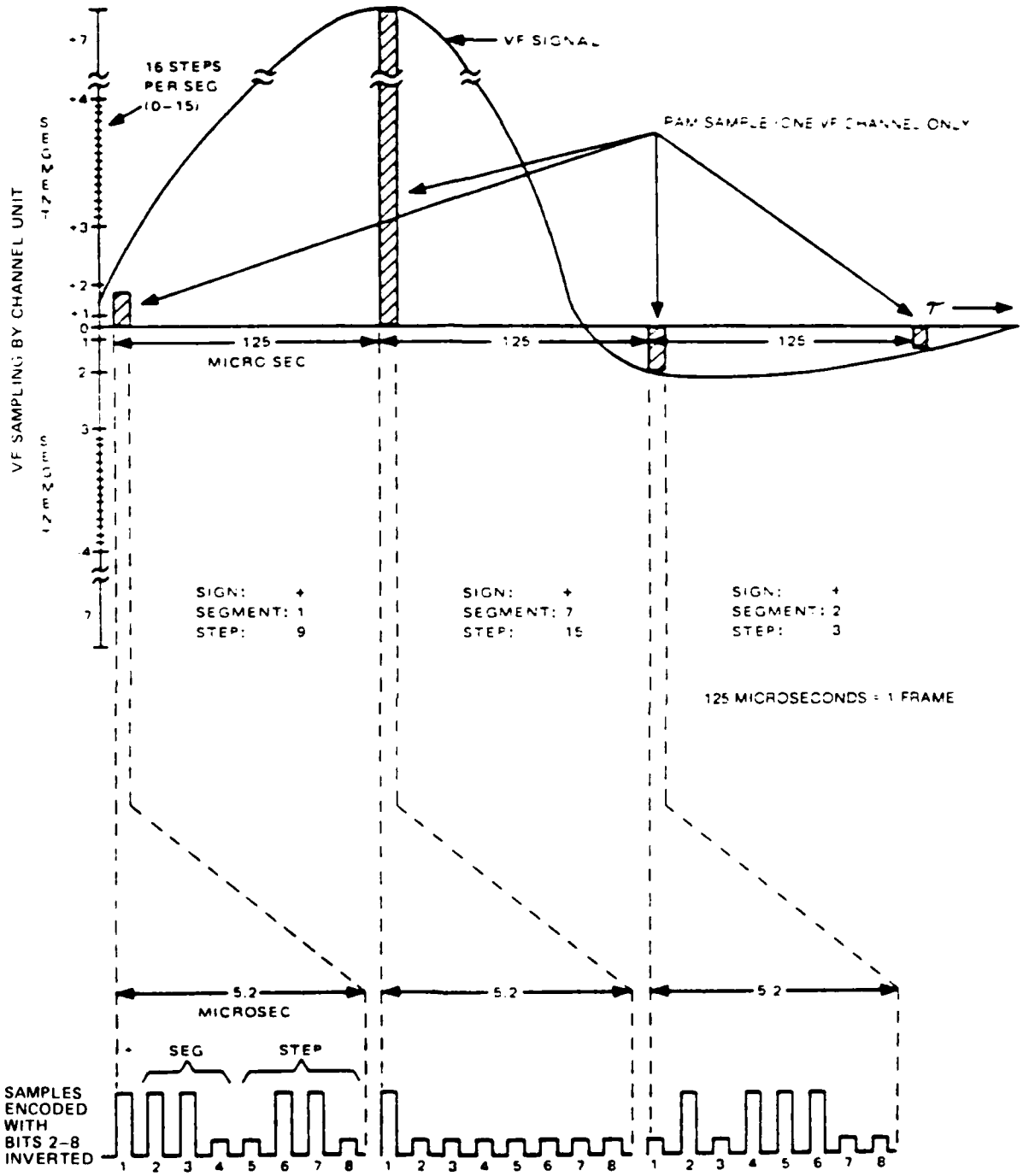

Figure 3-17. Voice frequency sampling and coding summary.

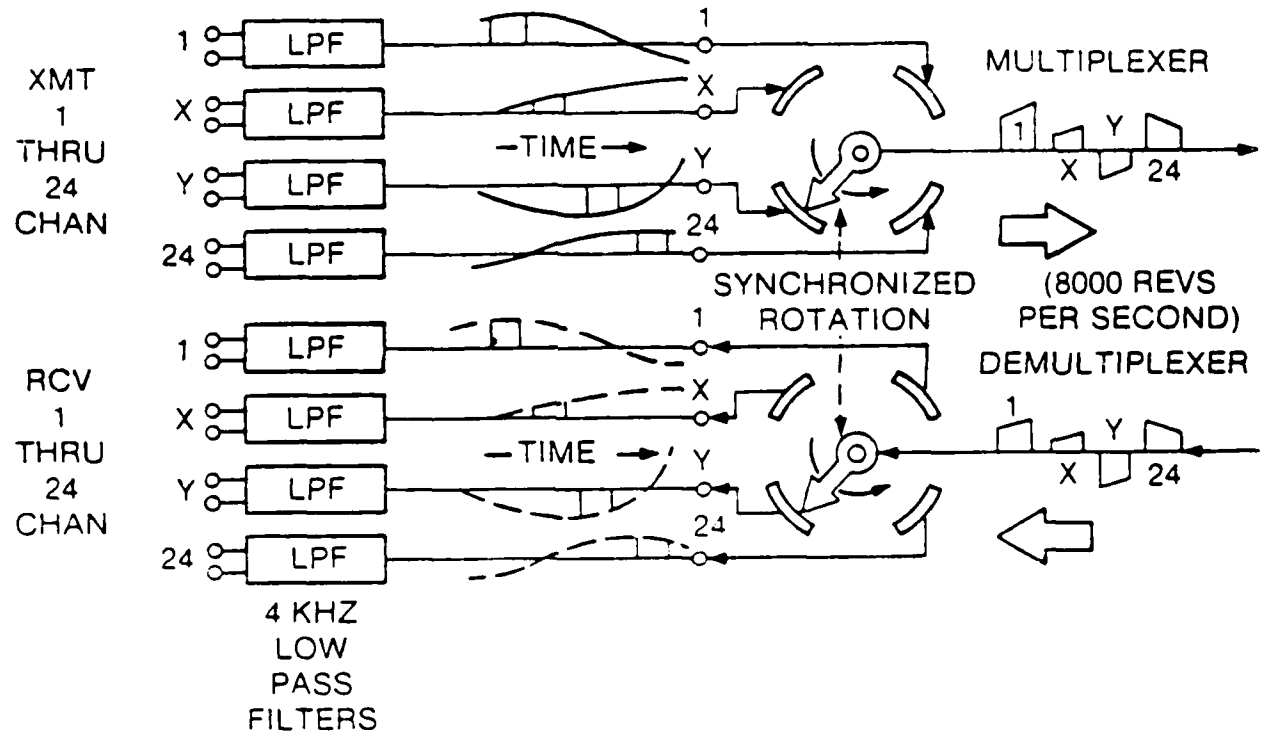

Figure 3-18. Voice channel sequential sampler.

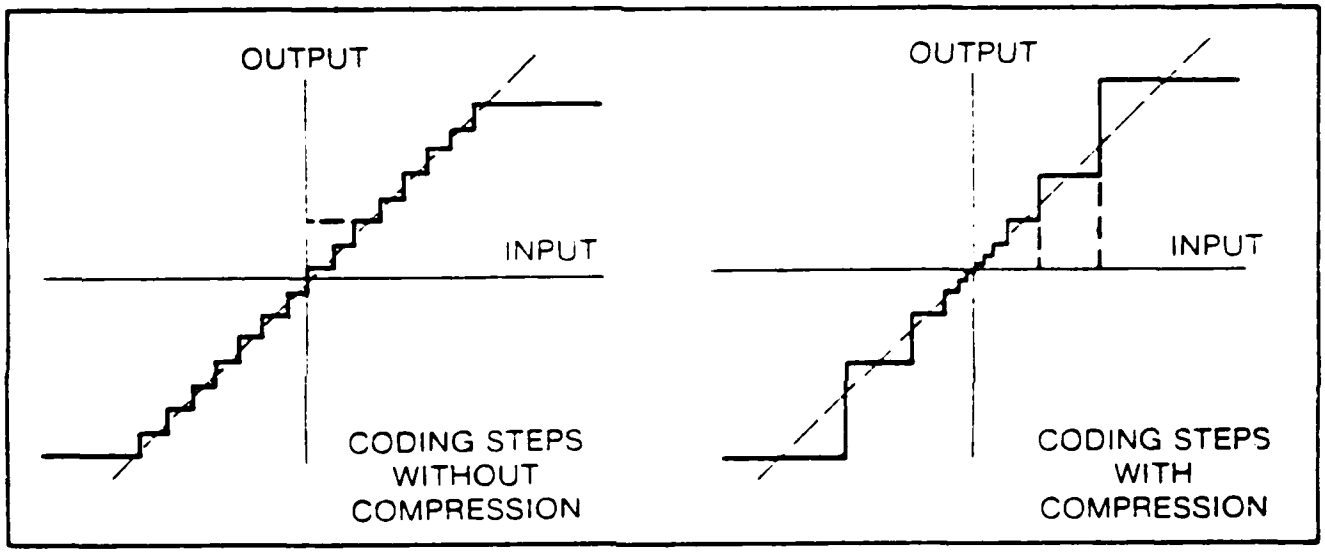

- MORE STEPS FOR SMALL SIGNALS
- IMPROVES SIGNAL-TO-NOISE RATIO
- REDUCES QUANTIZING NOISE

Figure 3-19. Companding principles.

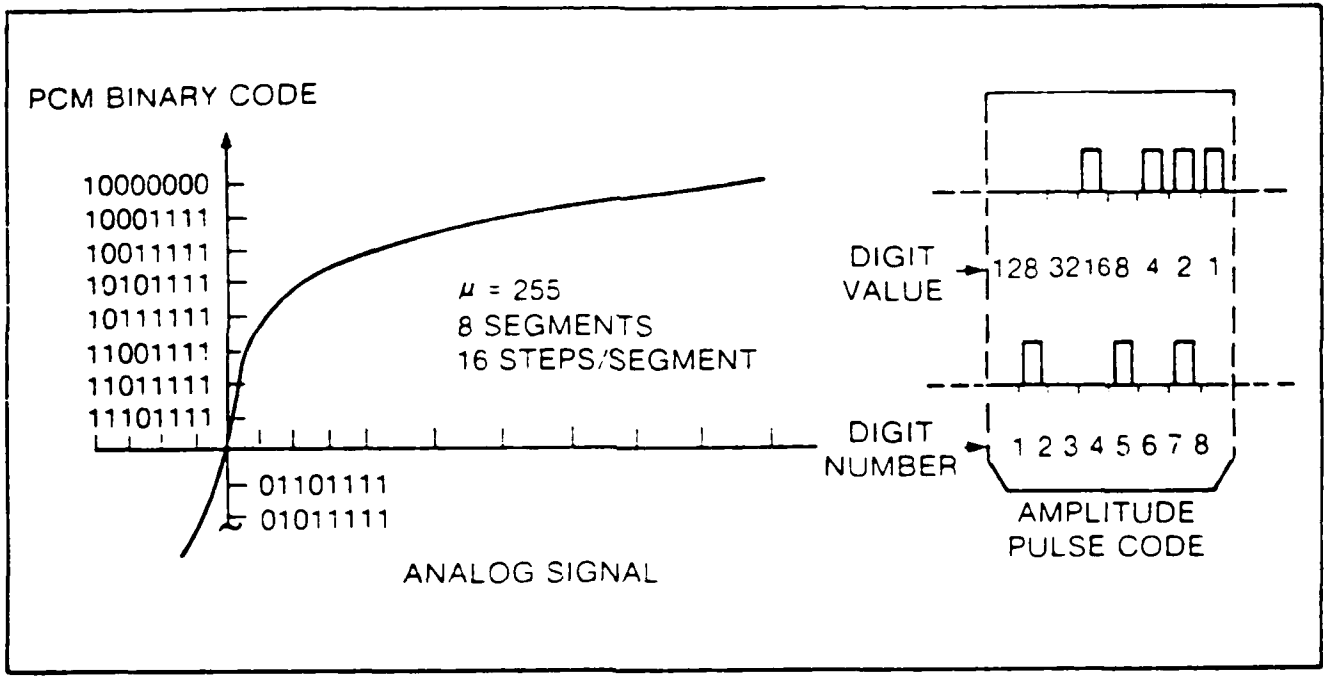

- 8 BITS GIVE 256 QUANTIZING STEPS
- μ LAW IS SEGMENTED LOG CURVE

Figure 3-20. PCM code building.

where

$u = 255$

x = compressor input

y = compressor output.

If linear amplitude steps were encoded, low-level signals would have coarse steps that would increase the quantizing noise. In order to reduce the noise, the amplitude quantizing steps are made smaller near the zero signal level and are made considerably larger at higher levels. Improvements of up to 30 dB are achieved by using this companding technique. The μ-law technique uses the following rules in encoding each PAM sample:

a. Bit 1 includes the polarity of the PAM sample. Logic 1 represents a positive level.

b. Bits 2, 3, and 4 encode the number of the segments within which the sample falls. Adjacent segments are in the ratio 2:1.

c. Bits 5, 6, 7, and 8 encode the step within the segment in which the PAM amplitude falls. Each segment is divided into 16 equal steps.

Figure 3-20 demonstrates the code building principle. Since 8 bits are used, 256 (i.e., 2^8) quantizing steps are realized. Thus, with each of the 24 voice channels sampled once and coded into 8-bit words, a bit stream of 192 bits is generated:

$$24 \text{ channels} \times \frac{8 \text{ bits}}{\text{channel}} = 192 \text{ bits.}$$

The 192 bits, which represent each of the 24 channels being sampled once, constitute a frame. A framing bit is added at the start of each frame to provide synchronization of the receiving channel bank unit. This brings the total number of bits in a PCM frame to 193. Since there are 8,000 frames generated per second, the T-1 signal has a bit rate of 1.544 Mb/s.

The PCM channel bank unit performs one other significant operation on the bit stream before the addition of necessary channel signaling takes place. The specifications of a T-1 signal require an average pulse density of one logic 1 per 8-bit period, with no more than 15 consecutive zeros. If all 24 voice channels were idle, this condition would be violated. The channel bank unit therefore complements the 7 bits of the code associated with the segment and segment step (bits 2 through 8). The most significant bit (bit 1), which gives an indication of a positive or negative signal, remains unchanged through this process.

The final operation that takes place on the T-1 signal is the addition of necessary channel signaling. This signaling information consists of on-hook, off-hook dial pulses and other indications that must be detected and serviced

by the appropriate switching facilities in order to provide a usable communications network. Similarly, the switching equipment must be able to signal the channel bank when to apply and remove ringing or other appropriate output functions. This necessary signaling is accomplished by using a PCM code bit previously dedicated to voice channel amplitude coding.

Two signaling bits are assigned for input signaling to the switching facility (ISA and ISB) and two for output signaling (OSA and OSB). Therefore, the channel bank unit at the subscriber end inserts ISA and ISB, while the switching facility inserts OSA and OSB. Insertion of the signaling bits is accomplished by using the least significant bit (bit 8) from the PCM sample on every 6th frame of the T-1 format. At frame number 6, ISA (or OSA on the output side) replaces bit 8 of the PCM code. At frame 12, ISB (or OSB) is inserted for bit 8.

Since the A and B status signaling is specifically loaded in alternate 6th frames, a means must be provided for the receiving channel bank unit to identify the 6th (A signaling) and the 12th (B signaling) frames. This function is provided by specifically controlling the status of each frame bit. A synchronizing pattern is provided, as shown in table 3-2. Frame sync is monitored by observing the alternating 1-0-1-0 pattern of the odd frame sync bits. The even sync pattern is monitored for a change from 0 to 1 at frame 6 and 1 to 0 at frame 12.

TABLE 3-2

SYNCHRONIZING PATTERN

Frame Number	1	2	3	4	5	6	7	8	9	10	11	12
Channel Sync Odd Frames	1	-	0	-	1	-	0	-	0	-	0	-
Channel Sync Even Frames	-	0	-	0	-	1	-	1	-	1	-	0
Combined Sync All Frames	1	0	0	0	1	1	0	1	1	1	0	0

Figure 3-21 illustrates the final format of the T-1 signal. At the bottom, the 12-frame repetitive pattern is shown. From right to left above the 12 frames, the alternating 1-0-1-0 sync pattern is shown, which is indicative of the odd frame pattern. Below, the even frame pattern illustrates how the change of even frame sync from 0 to 1 signals that the next frame (6) contains the input or output signaling bit A. Whenever the even sync bit changes back to 0, the next frame is 12, and the B signaling bit is in all channels. The PCM sample at the top of figure 3-21 shows how the A and B signaling bits are inserted at frames 6 and 12.

3.2.3.3 Digital Transmission Fundamentals. Two families of digital microwave transmission equipment cover the majority of communications needs. These two families are outlined in the following paragraphs.

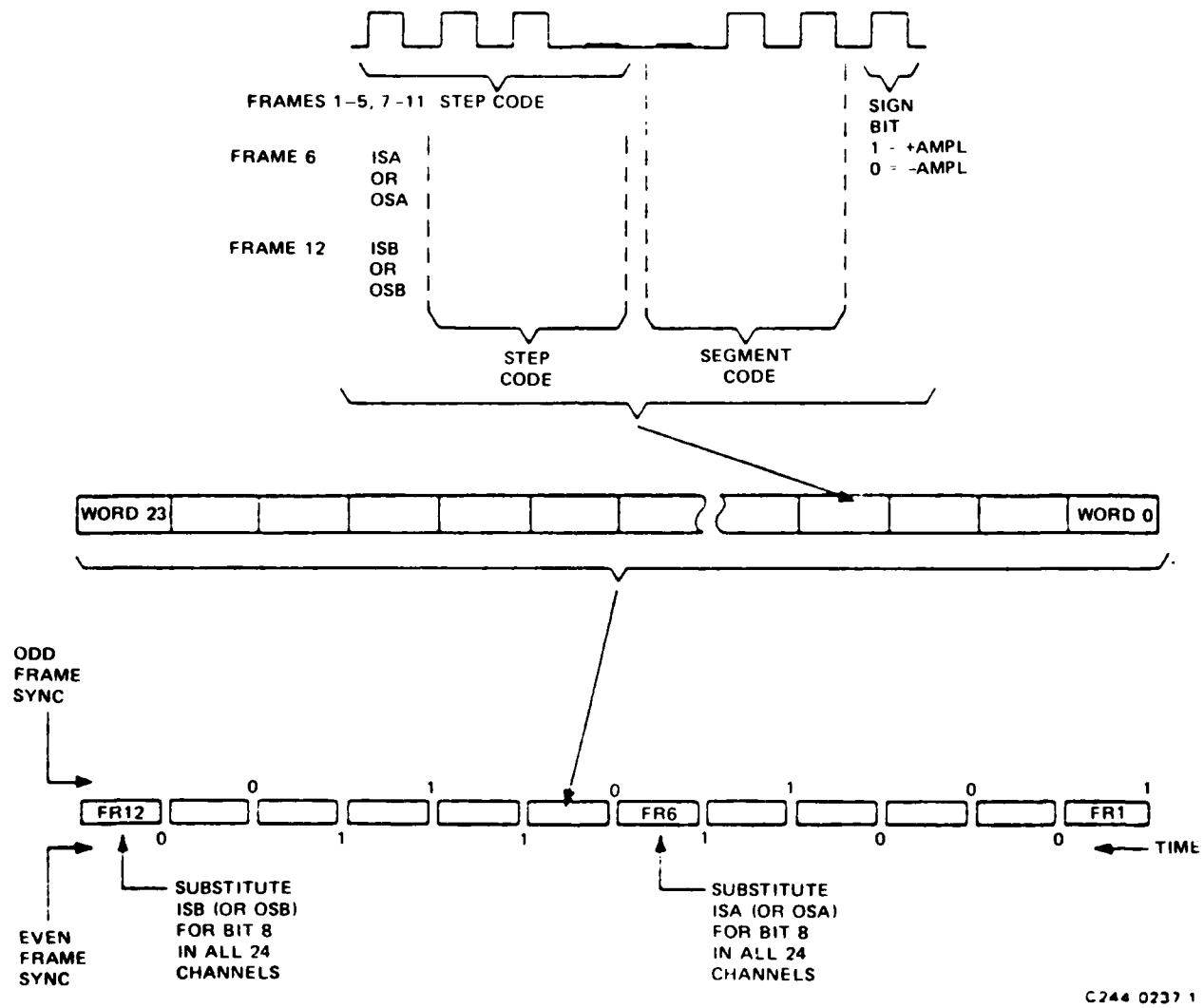

Figure 3-21. Composite T-1 format.

a. Low Density Applications (< 192 PCM Channels)

The requirement for low density applications may be effectively satisfied by a three-level partial response technique that effects medium bandwidth efficiency, i.e., approximately 1 bit/Hz. Multiplexing techniques may include PCM and continuously variable slope DM.

b. High Density Applications (≥ 192 PCM Channels)

The requirement for high density applications is better suited for an 8-phase shift keyed (8PSK) or other PSK/RF transmission method. On lower density transmission applications, analog radio using three-level partial response may be employed, while higher density requirements should be met by using a transmission approach that has higher bit efficiency (· 2.25 bits/Hz).

3.2.3.3.1 Digital Modulation Techniques. Three primary forms of digital modulation exist, with numerous variations of each type. These three basic forms are as follows:

a. Amplitude shift keying (ASK).

b. Frequency shift keying (FSK).

c. Phase shift keying (PSK).

Corresponding analog modulation techniques are amplitude modulation (AM), frequency modulation (FM), and phase modulation (PM), respectively. Of the three digital methods, the type discussed in depth is PSK, and, more specifically, 8 PSK. As a general rule, the phase-modulated carrier yields the least performance in the presence of random noise, while being quite easy to implement in microwave applications.

Given a digital message, the simplest modulation technique is ASK, wherein the carrier amplitude is switched either on or off. ASK is illustrated in figure 3-22. The ASK modulation technique is obviously a two-level system and, similar to AM, has wasted power in the carrier.

FSK is a method whereby the carrier frequency is shifted between f_1 and f_2 by the input bit stream. Figure 3-23 illustrates the technique used in FSK. This system uses two logic levels and is widely used in teletype communications.

In its simplest form, PSK is better known as binary PSK (BPSK) or 2PSK and consists of a two-level system, as illustrated in figure 3-24. The carrier phase is shifted 180° from its original phase upon a transition from a logic 0 to 1 or 1 to 0. All other PSK methods are based on the BPSK techniques, while using more logic levels.

Quaternary phase shift keying (QPSK) or 4PSK, demonstrated in figure 3-25, provides four logic levels by phase shifting the carrier in combinations of 2 bits each: 0,0; 0,1; 1,0; or 1,1. This technique increases the bit efficiency

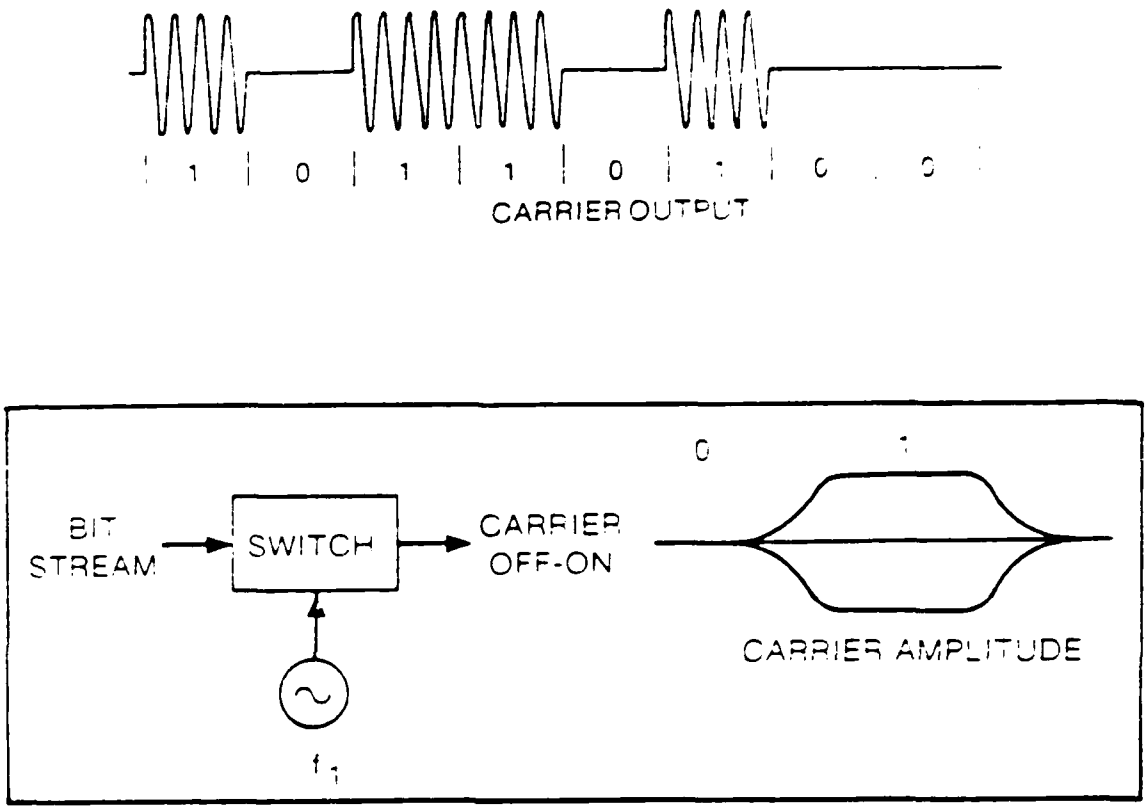

- TYPICAL CW-KEYED CARRIER
- 2-LEVEL SYSTEM

Figure 3-22. Amplitude shift keying.

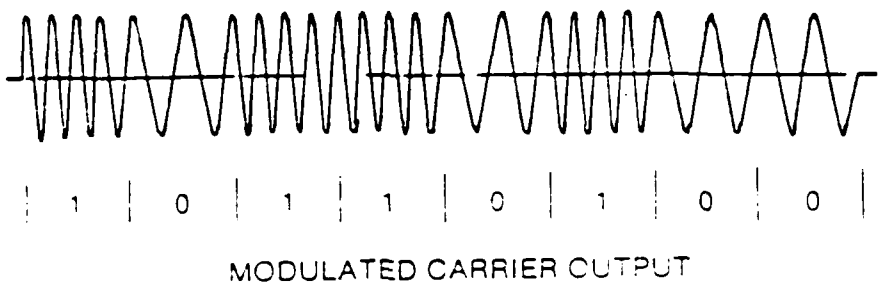

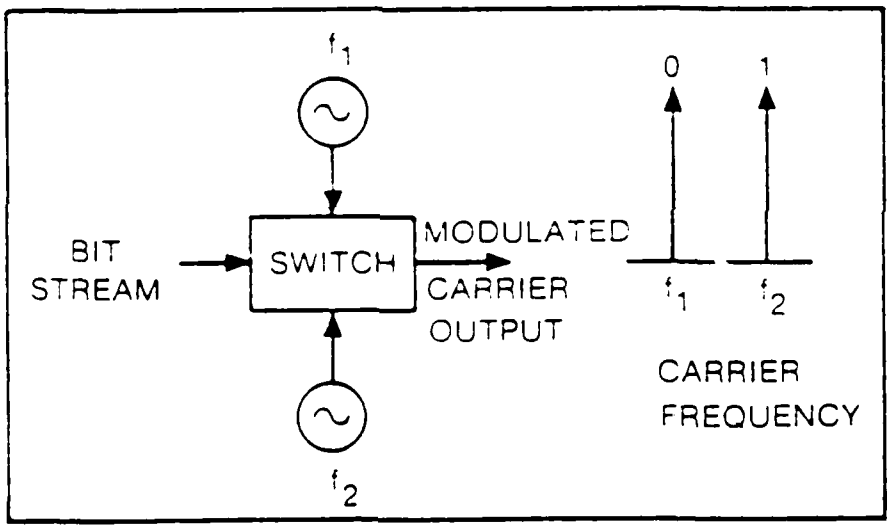

- WIDELY USED FOR TELETYPE CIRCUITS
- 2-LEVEL SYSTEM

Figure 3-23. Frequency shift keying.

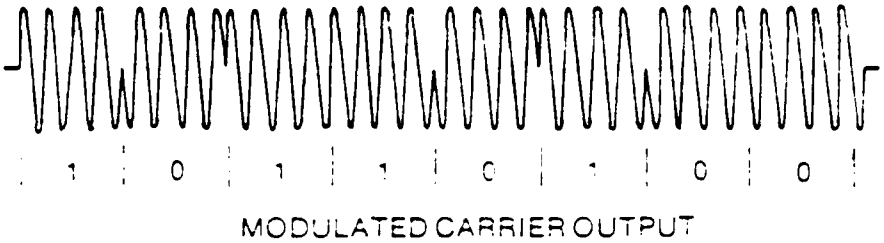

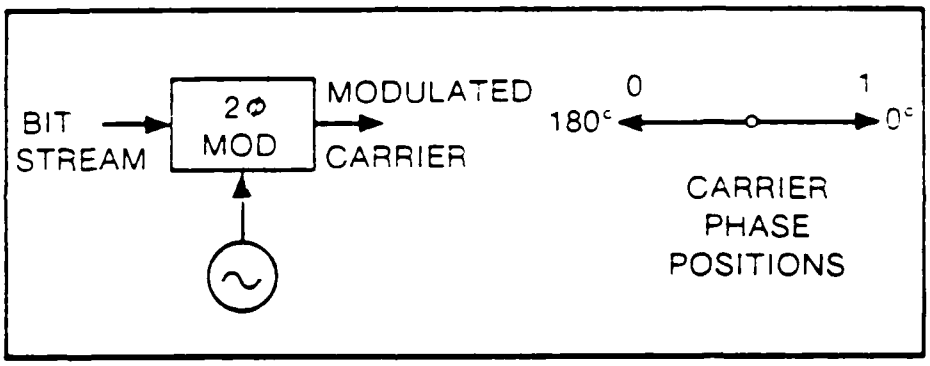

- BASIC OF PHASE-SHIFTED SYSTEMS
- 2-LEVEL SYSTEM

Figure 3-24. Phase shift keying.

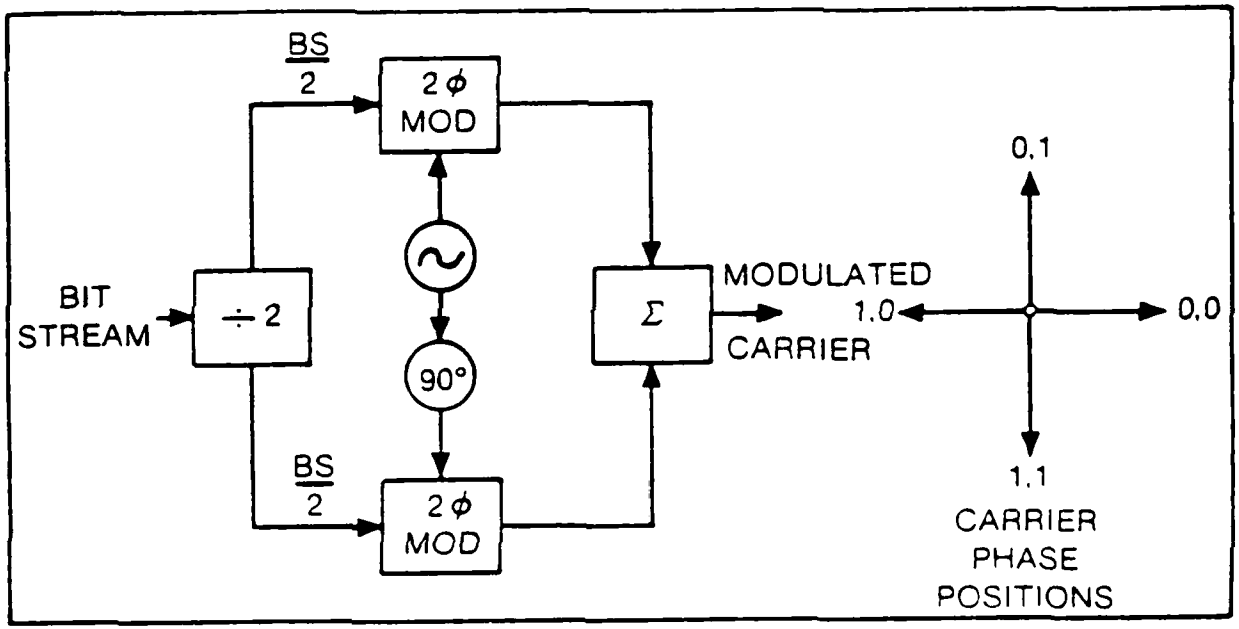

● 4-LOGIC LEVEL SYSTEM

Figure 3-25. Four-phase shift keying.

(bits/Hz) of the system over the 2PSK system, while increasing the required signal-to-noise ratio (S/N) in order to attain the same BER.

The 8-logic level technique (8PSK) allows a higher bit efficiency (theoretically 3 bits/Hz) by modulation of the RF carrier in combinations of 3 bits each. This allows for 8 discrete phases or logic levels: 2^N = number of logic levels or phases. A typical 8PSK system is illustrated in figure 3-26. For the MDR-8-5N, the 45-Mb/s bit stream is divided into three discrete buses of 15 Mb/s each (X, Y, and A buses). These three data streams directly modulate the 8-GHz RF carrier.

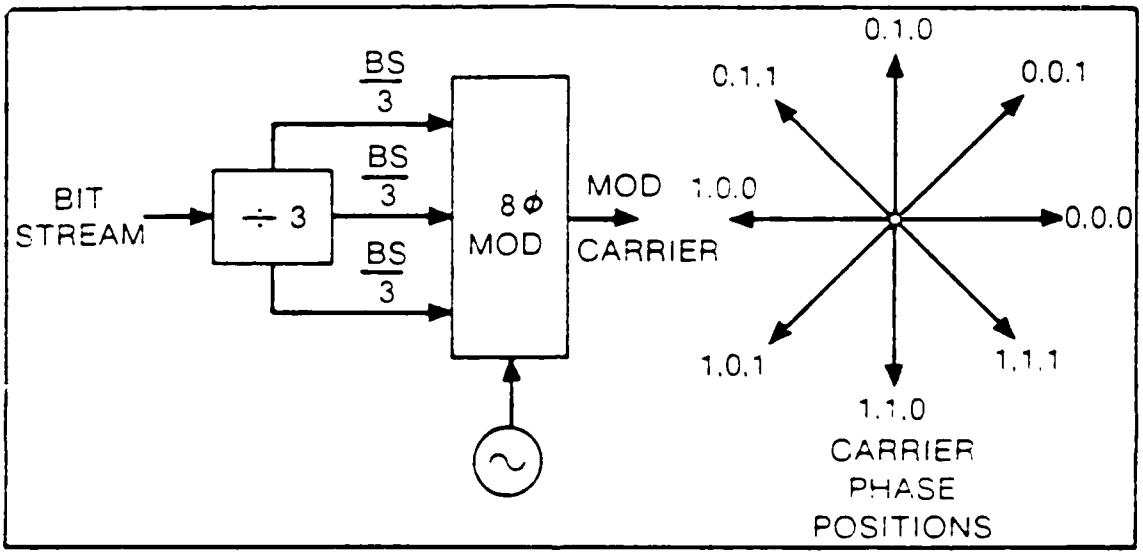

- USED BY COLLINS IN MDR-( ) EQUIPMENT
- 8-LOGIC LEVEL SYSTEM

Figure 3-26. Eight-phase shift keying.

As applicable to the MDR-() series radio, the actual bit efficiency attained by 8PSK is 2.25 bits/Hz. This figure, slightly less than the theoretical 3 bits/Hz, is due to RF filtering, equalization, and transmitted spectrum attenuation. However, this 2.25-bits/Hz efficiency reflects maximum use of the 40-MHz spectrum allowed by the FCC for transmission of two T-3 carriers.

The disadvantage of 8PSK is the increased S/N over BPSK or QPSK systems required in order to receive the same BER. Figure 3-27 reflects the BER comparisons in PSK systems.

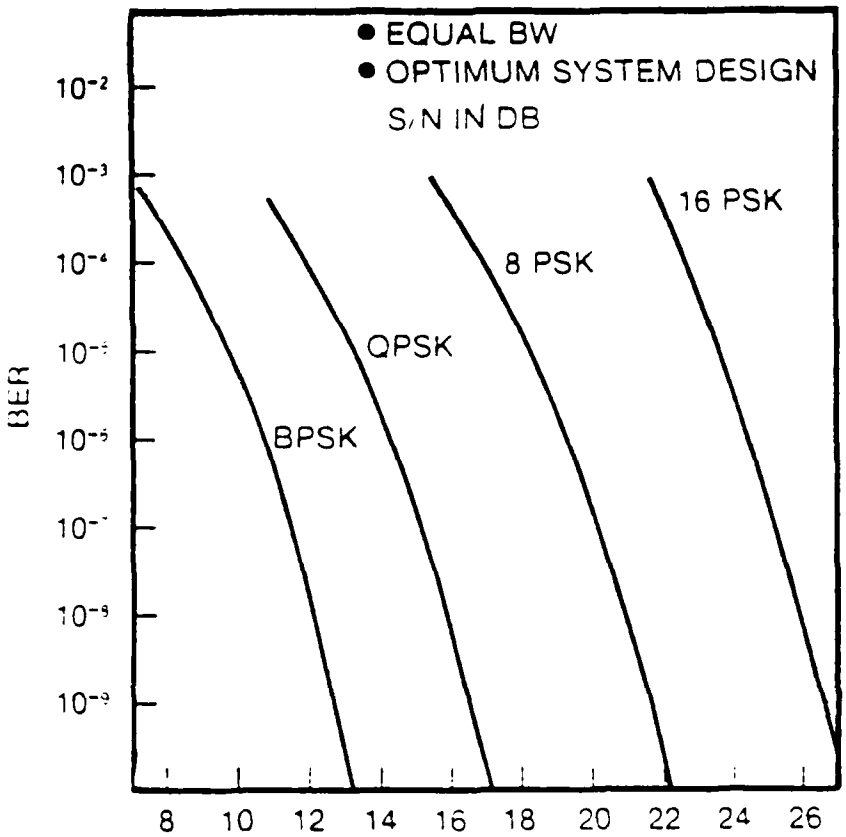

Figure 3-27. BER curves, theoretical.

Sixteen-phase shift keying (16PSK) effects a higher bit efficiency (4 bits/Hz theoretical) at the expense of noise threshold. The problems associated with 16PPSK are the excessively high S/N required to attain the equivalent BER BPSK or QPSK systems. A 16PSK system is illustrated in figure 3-28.

One of the major figures of merit for any digital communications system is its BER at a specified S/N. This figure, analogous to the noise-power ratio in FM/FDM systems, represents an ultimate gage of performance. Figure 3-27 is a graph of the BER attained with various PSK systems plotted against the S/N required to acheive the particular BER. It is clear from figure 3-27 that as the number of logic levels increases, the S/N required to attain a specific BER increases drastically. From this plot, it is obvious that 8PSK offers the optimum tradeoff in terms of S/N and bits/Hz efficiency.

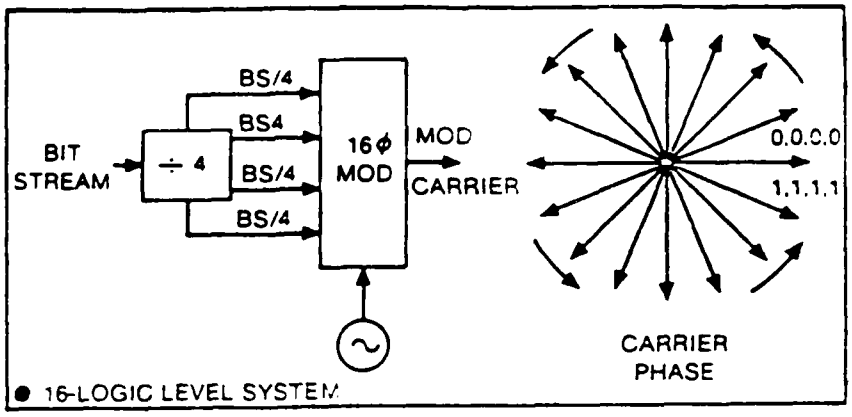

Figure 3-28. Sixteen-phase shift keying.

Partial response keying is the modulation technique used with conventional analog radio. The three-level baseband, either amplitude or frequency, modulates the RF carrier as illustrated in figure 3-29. Also included as partial response techniques are the QPRS AM and QPRS AM + PSK schemes, as illustrated by figures 3-30 and 3-31. Both these methods provide a 16-level logic output with a theoretical 4-bit/Hz bit efficiency, sacrificing noise threshold.

Figure 3-32 provides a summary of the digital modulation techniques presented thus far, showing the various tradeoffs associated with each technique. Note that Nyquist bits/Hz figures are theoretical and, therefore, are slightly less when configured in an actual transmission system.

In using the 8PSK modulation technique, it is necessary to band-limit the transmitted spectrum because of restrictions imposed on available bandwidth by the FCC. For example, the output spectrum of the MDR-() series radio (for two T-3 carriers, 90 Mb/s) resembles that seen in figure 3-33. The optimum filtering of the signal in order to meet FCC requirements and to minimize noise bandwidth is accomplished by filtering at both the transmitter and the receiver. This concept is illustrated by a simplified block diagram in figure 3-34. The FCC limitations on emission of a digital signal dictate the spectrum characteristics of the transmitter, illustrated in figure 3-35. Note that there is no unique solution for the filter transfer function $H_t(W)$. Instead, there may be many solutions of equal performance, because the emitted spectrum limitations pertain to the skirts of the output rather than to the portion near the center band. After an acceptable transmitter characteristic has been determined, the next problem is the choice of a receiver characteristic that minimizes the effects of noise, illustrated by figure 3-36.

The effect of the overall filtering of the 8PSK RF spectrum is called raised cosine shaping. Both the frequency response and the impulse response are illustrated in the common function (Sin X)/X (see figure 3-37). The parameter establishes the width of the rolloff and can be used to adjust the amount of bandwidth required for a given data rate. For further information concerning the raised cosine shaping technique, refer to the Bell Telephone Laboratories text, "Transmission Systems for Communications." This text is listed as a reference document in appendix B.

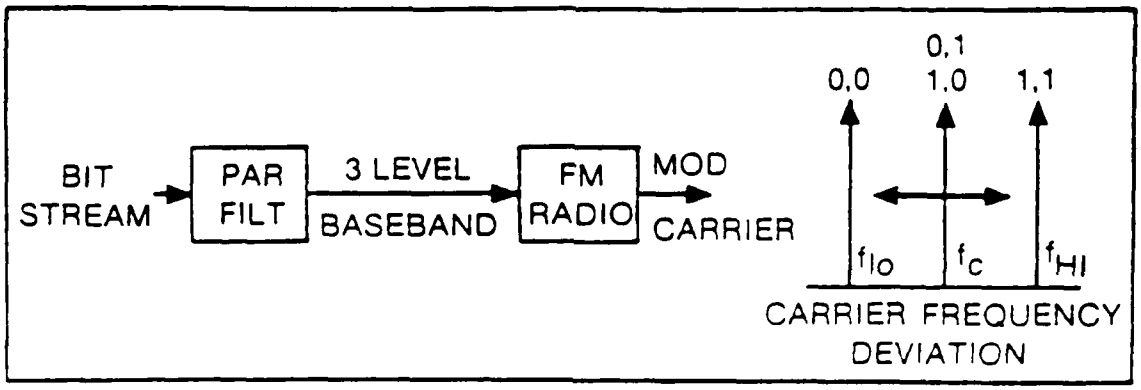

- USED ON CONVENTIONAL FM ANALOG RADIO
- 4-LOGIC LEVEL SYSTEM
- 3 VOLTAGE LEVELS

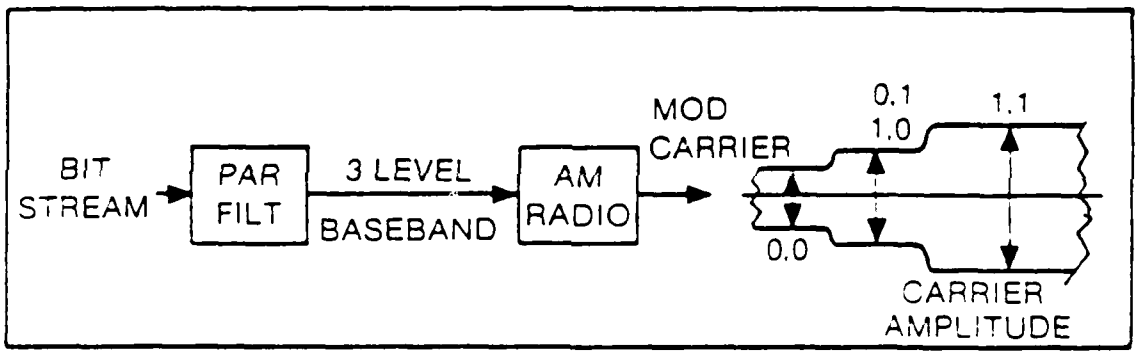

- RADIO CARRIER MODULATED OR SWITCHED TO 3 LEVELS
- 4-LOGIC LEVEL SYSTEM
- 3 VOLTAGE LEVELS

Figure 3-29. Tertiary partial response keying (illustrated for FM and AM).

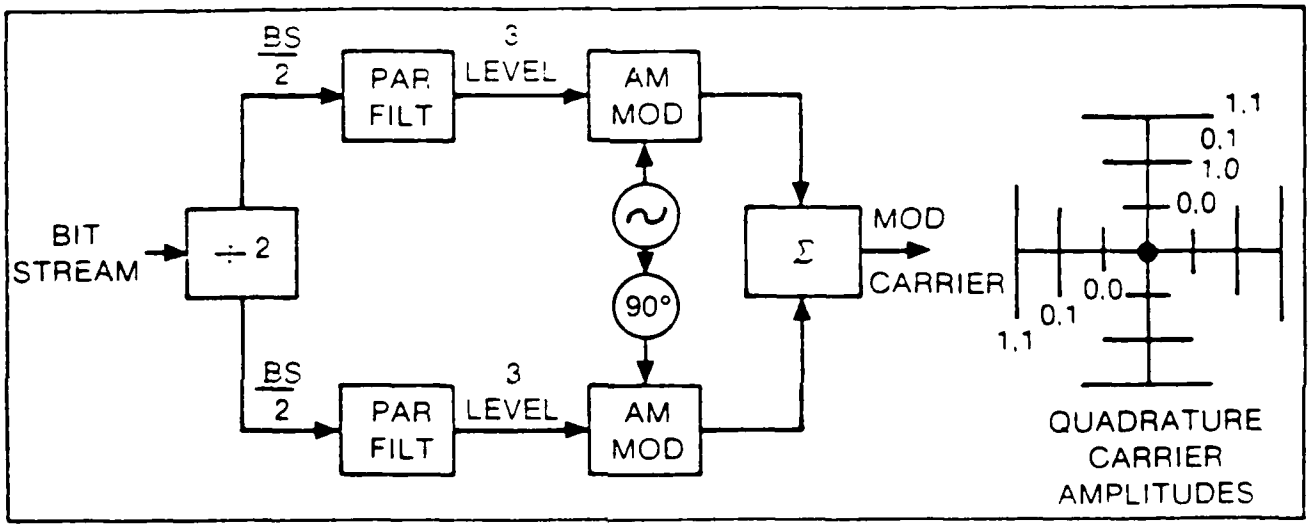

- 16-LEVEL SYSTEM
- 9 AMPLITUDE LEVELS

Figure 3-30. Quadrature partial response keying (AM only).

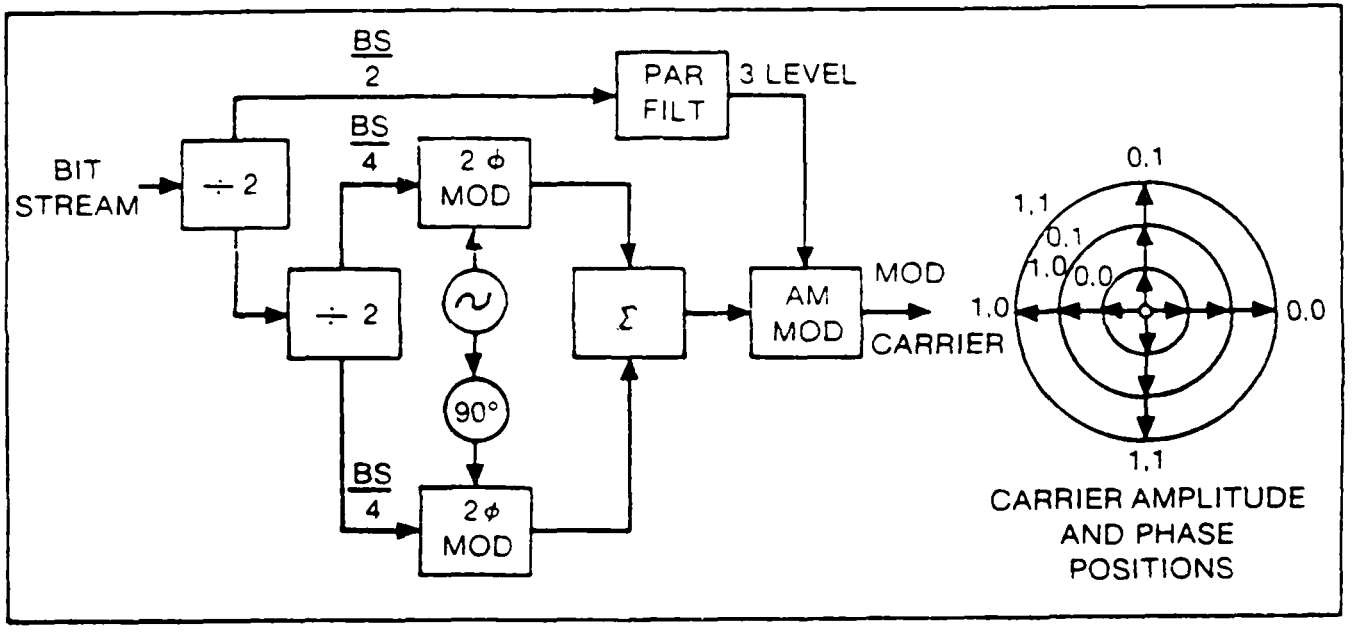

- 16-LOGIC LEVEL SYSTEM
- 3 AMPLITUDE, 4 PHASE LEVELS

Figure 3-31. Quadrature partial response keying (AM + PSK).

TYPE	LOGIC LEVELS	NYQUIST BITS/HZ	FIXED BANDWIDTH SIGNAL-TO-NOISE FOR 10^{-4} BER (COHERENT DET)
AMPLITUDE	2	1	14.4 dB
FSK	2	1	11.7 dB
PARTIAL RESPONSE FM	4	2	21.2 dB
PARTIAL RESPONSE AM	4	2	23.8 dB
2 PSK	2	1	8.4 dB
4 PSK	4	2	11.4 dB
8 PSK	8	3	16.5 dB
16 PSK	16	4	22.1 dB
QPRS AM	16	4	31.4 dB
QPRS AM - PSK	16	4	28.5 dB

- PRACTICAL SYSTEMS OPERATE AT REDUCED PERFORMANCE BASED UPON FILTERING, EQUALIZATION, AND TRANSMITTED SPECTRUM ATTENUATION

Figure 3-32. Comparison of modulation systems.

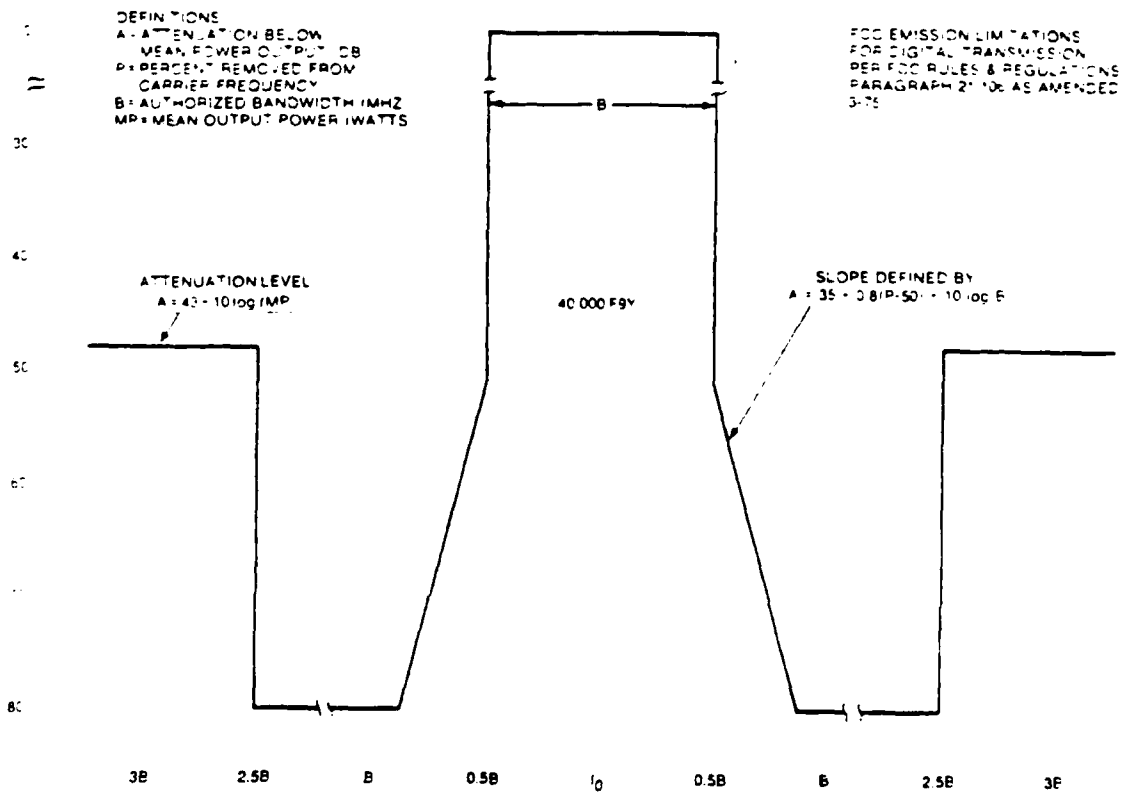

Figure 3-33. Occupied RF spectrum.

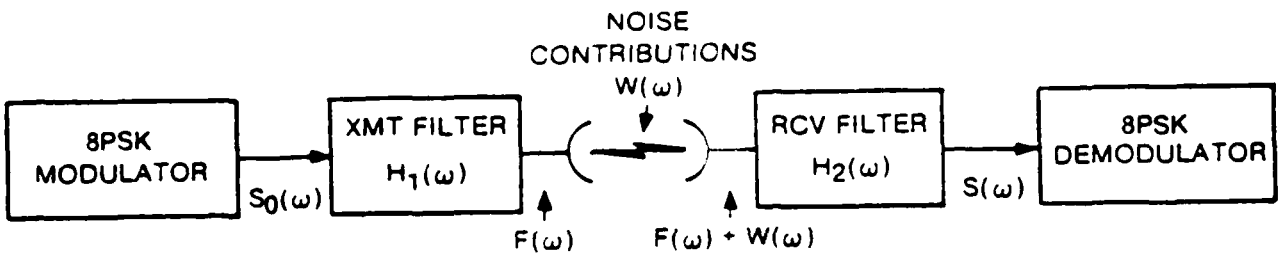

$S(\omega) = [S_0(\omega)H_1(\omega) + W(\omega)]H_2(\omega)$

$S_0(\omega)$ = FREQUENCY SPECTRUM OF RECTANGULAR PULSES

$H_1(\omega)$ = XMT FILTER RESPONSE

$H_2(\omega)$ = RCV FILTER RESPONSE

$\omega = 2\pi f$

Figure 3-34. Digital system spectrum considerations.

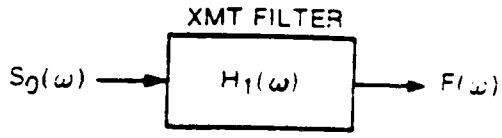

$$F(\omega) = S_0(\omega)H_1(\omega)$$

$$F(\omega) = \text{WITHIN FCC RESPONSE LIMITS}$$

$$H_1(\omega) = \frac{F(\omega)}{S_0(\omega)}$$

$$\omega = 2\pi f$$

Figure 3-35. Transmitter filter.

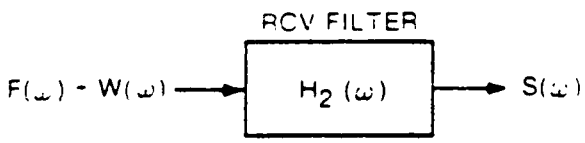

$$S(\omega) = [F(\omega) + W(\omega)]\, H_2(\omega)$$

$$H_2(\omega) = \frac{S(\omega)}{F(\omega) + W(\omega)}$$

$F(\omega)$ = TRANSMITTED PULSE SPECTRUM
$W(\omega)$ = NOISE SPECTRUM
$H2(\omega)$ = RCV IMPULSE RESPONSE FREQUENCY CHARACTERISTIC

Figure 3-36. Receiver filter.

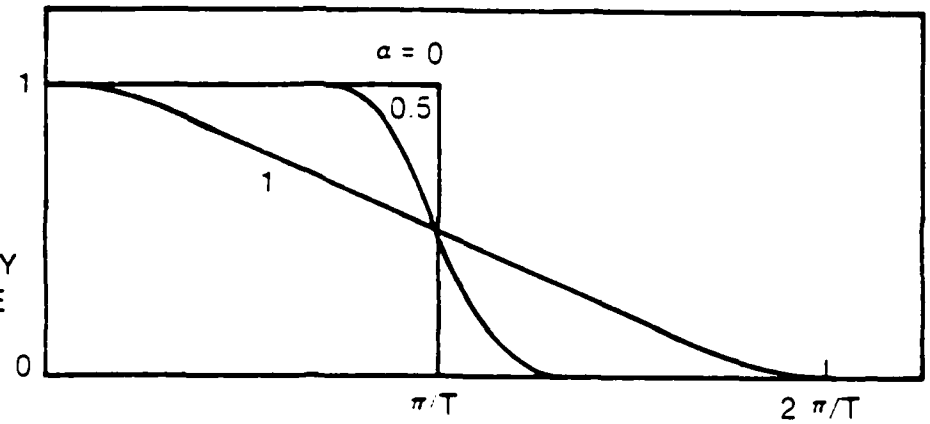

FREQUENCY RESPONSE

$$A(\omega) = 1;\ 0 < \omega < \frac{\pi}{T}(1-\alpha)$$

$$A(\omega) = 1/2\left[1 - \mathrm{SIN}\ \frac{T}{2\alpha}\left(\omega - \frac{\pi}{T}\right)\right],\ \frac{\pi}{T}(1-\alpha) < \omega < \frac{\pi}{T}(1+\alpha)$$

IMPULSE RESPONSE

$$a(t) = \frac{\mathrm{SIN}\ \pi t/T}{\pi t/T}\ \frac{\mathrm{COS}\ \alpha \pi t/T}{1 - 4\alpha^2 t^2/T}$$

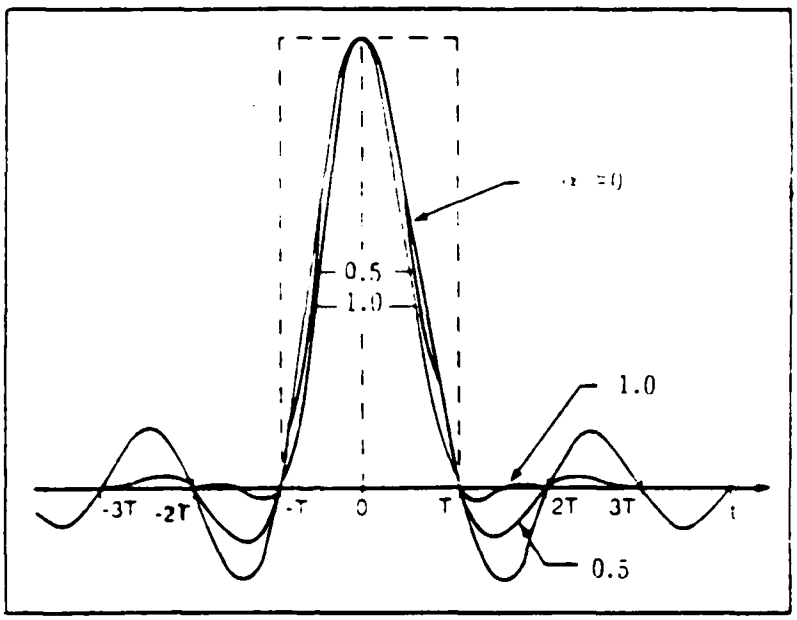

Figure 3-37. Impulse response of raised cosine filters.

3.2.4 System Gain. Basics of system gain and common diversity techniques are discussed in the following sections.

3.2.4.1 System Gain Basics. In any microwave transmission system, either digital or analog, one of the first points to be investigated is system gain. System gain is defined as follows:

$$\begin{bmatrix}\text{transmitted}\\ \text{power}\end{bmatrix} - \begin{bmatrix}\text{receiver}\\ \text{threshold}\end{bmatrix} - \begin{bmatrix}\text{waveguide branching}\\ \text{losses}\end{bmatrix} = \text{system gain}$$

where

[transmitted power] is the power output in dBm taken directly out of the RF compartment or power amplifier,

[receiver threshold] is the receiver carrier power required to achieve a BER of 10^{-6} in a digital system (see figure 3-38) or a S/N of 30 dB in an analog system (see figure 3-39), and

[waveguide branching losses] are the total losses of all waveguide kits between output of the power amplifier and the antenna itself. This definition includes filters, circulators, and other apparatus that may contribute losses to the overall system. As an example, consider the following.

Example:

A microwave transmitter has a power rating at the power amplifier output of 7 watts. The receiver requires a receiver carrier of -65 dBm in order to achieve a BER of 10^{-6}, while the waveguide, circulators, and filters contribute 3 dB of loss to the overall system. Find the system gain required.

First, convert the 7 watts to dBm using the following equation:

$$P_{out}\ (\text{dBm}) = 10 \log \frac{\text{watts}}{10^{-3}} = 38.5\ \text{dBm}$$

Next, perform necessary arithmetic:

$$[38.5] - [-65] - [3]\ \text{db} = 100.5\ \text{dB}$$

Thus, a system gain of 100.5 dB is required for proper BER operation, and all path engineering must be considered with this figure as the goal.

The system gains associated with the four types of PSK are illustrated in figure 3-40. Note that a 7.7 dB increase in system gain is required for 16PSK over BPSK or QPSK.

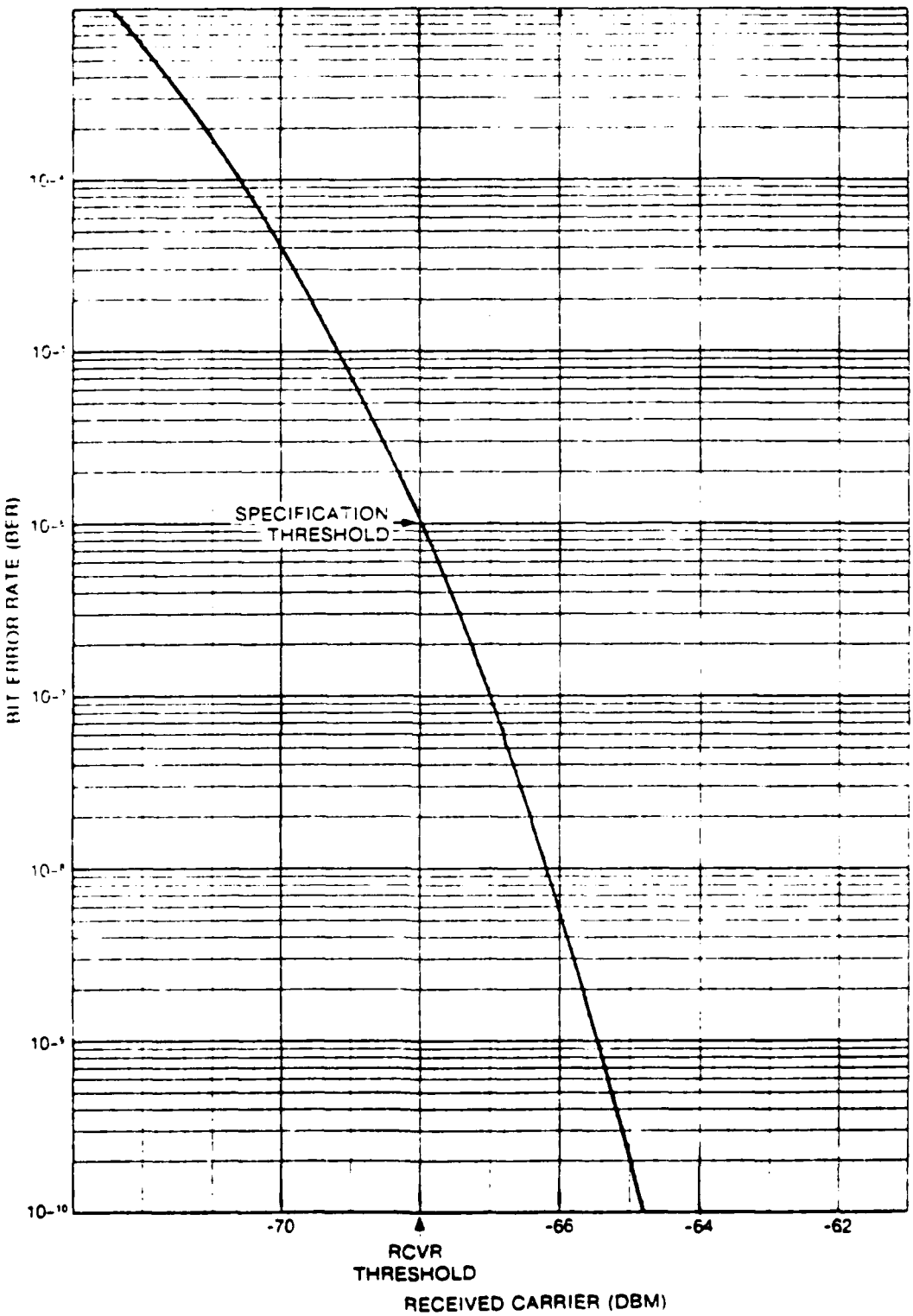

Figure 3-38. BER versus received carrier.

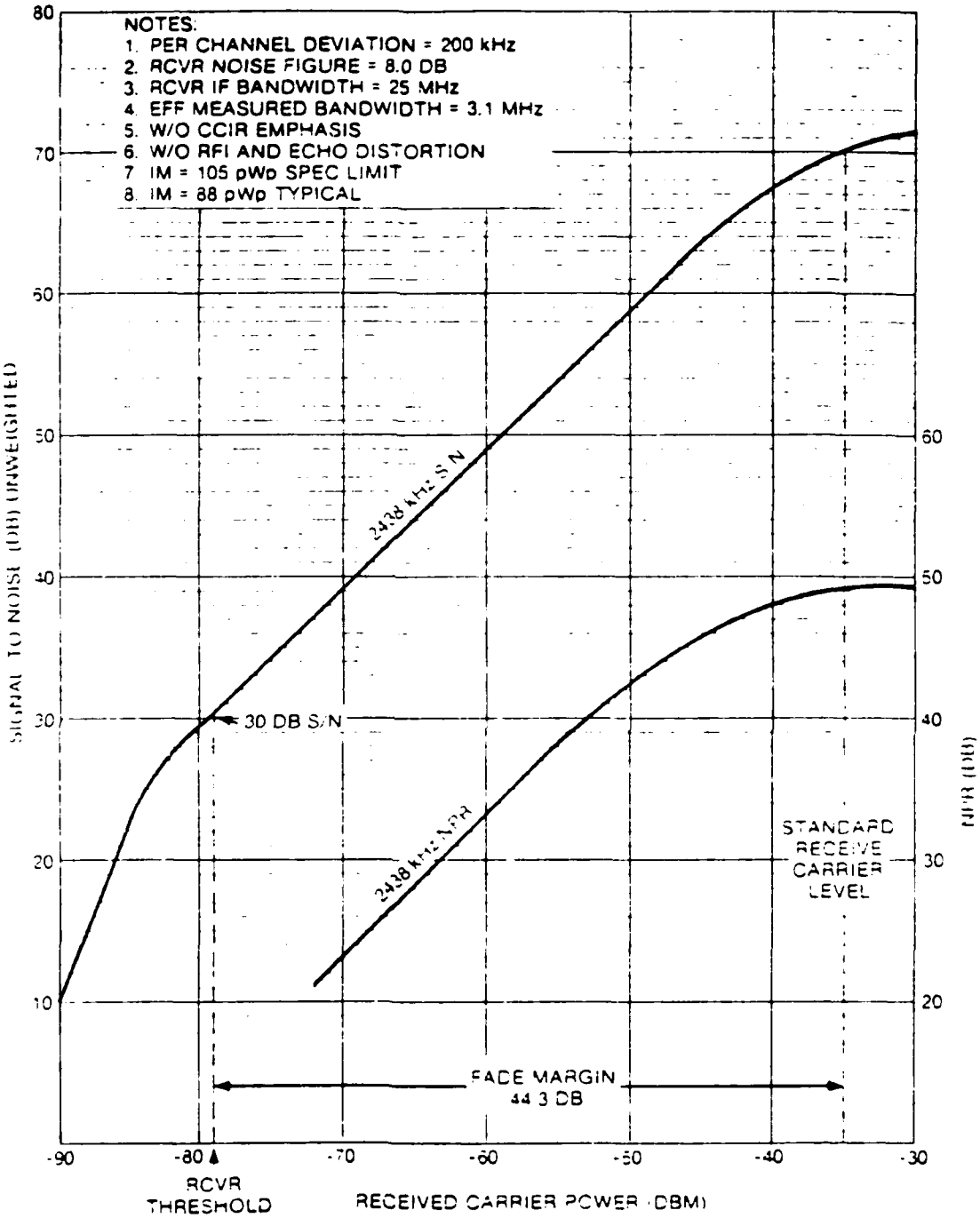

Figure 3-39. Analog system receiver carrier power (dBm).

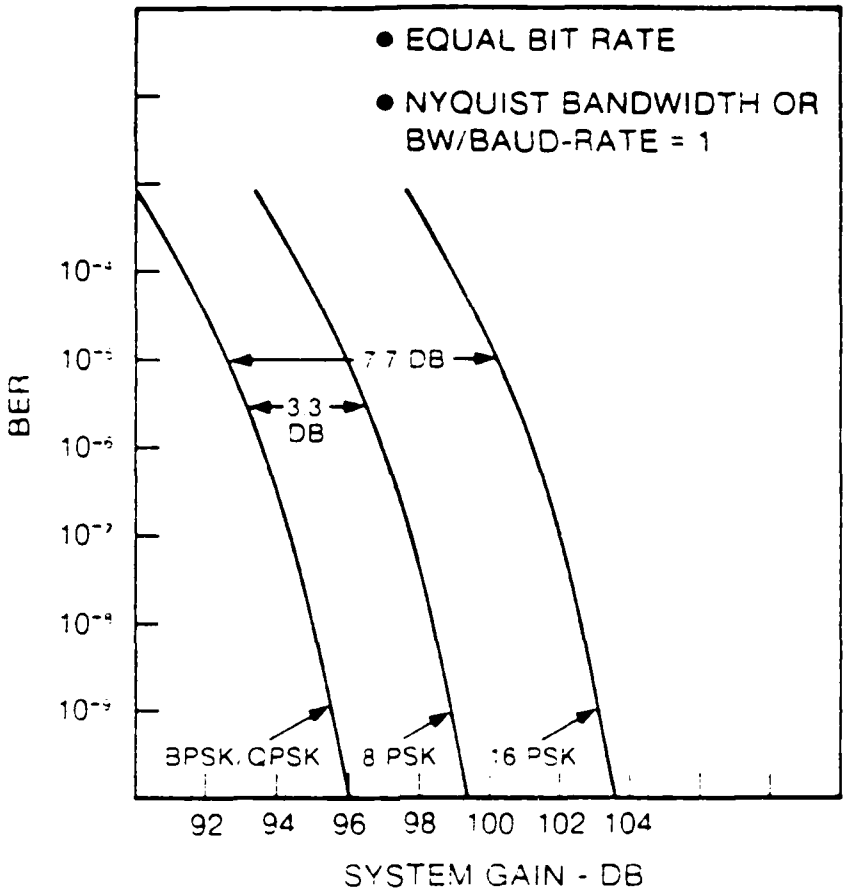

Figure 3-40. Comparison of PSK systems.

3.2.4.2 Basics of Common Diversity Techniques. Naturally, different forms of diversity must be taken into account when determining system gain. Four types of diversity are commonly used in the majority of microwave systems. These four methods are described briefly in this section, while they are considered in more detail in paragraph 5.2. The four commonly used diversity methods are as follows:

a. Frequency diversity, single antenna.

b. Frequency diversity, dual antenna.

c. Space diversity receivers, hot standby transmitters.

d. Power split receivers, hot standby transmitters.

The frequency diversity arrangement provides full and simple equipment redundancy and has the great operational advantage of two complete end-to-end electrical paths, so that full testing can be done without interrupting service

(see figure 3-41). Its disadvantage is that it doubles the amount of spectrum required. The single antenna version provides an economic advantage over the dual antenna, but is not optimal for a path with several parallel RF channels.

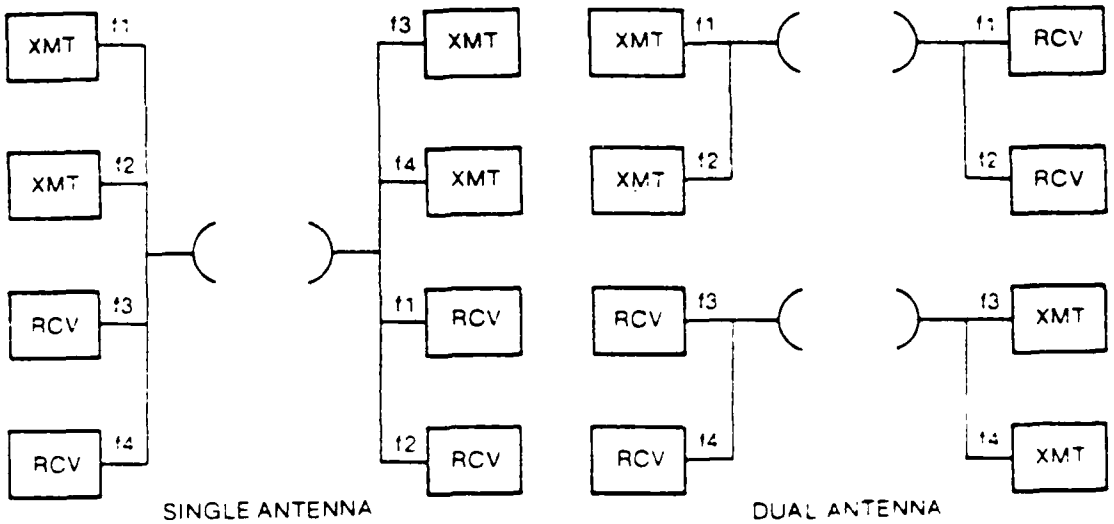

Figure 3-41. Frequency diversity arrangement.

The space diversity arrangement with automatically switched hot standby transmitters also provides full equipment redundancy, but does not provide a separate end-to-end operational path (see figure 3-42). Because of the requirement for additional antennas and waveguide, it is more expensive than frequency diversity. However, it provides efficient spectrum usage and extremely good diversity protection, in many cases substantially greater than obtainable with frequency diversity, particularly when the latter is limited to small frequency spacing intervals.

The RF power split receivers arrangement (better known as standard A, hot standby equipment configuration) provides an economic advantage over space diversity in antennas and waveguide and has the same efficient spectrum usage. The disadvantage of this scheme is the 3-dB loss in the RF power splitter. Although it is not shown in figure 3-43, the power split receivers scheme can also be arranged for a dual antenna configuration.

3.2.5 Hardware Realization/Design Considerations. Up to this point, the majority of the information presented pertains to communication systems in general. The purpose of this section is to provide a brief technical description of the hardware items required in a digital communication system. These technical descriptions are organized into four discrete sections as follows:

a. MDR-() Series Radio.

b. DMX-() Digital Muldem.

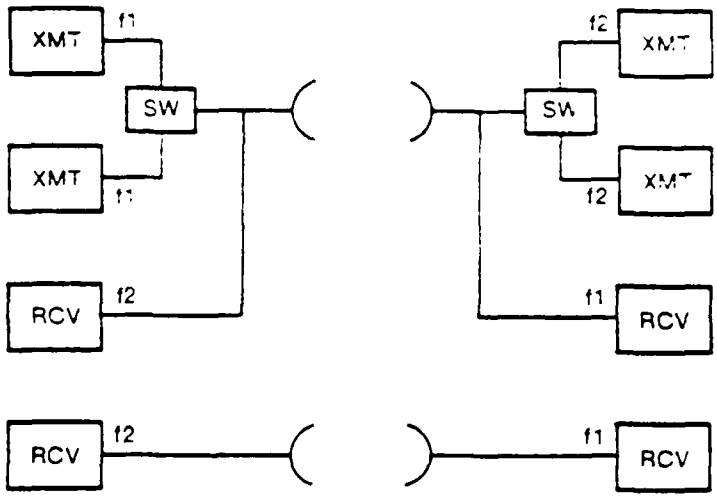

Figure 3-42. Space diversity receivers with hot standby transmitters.

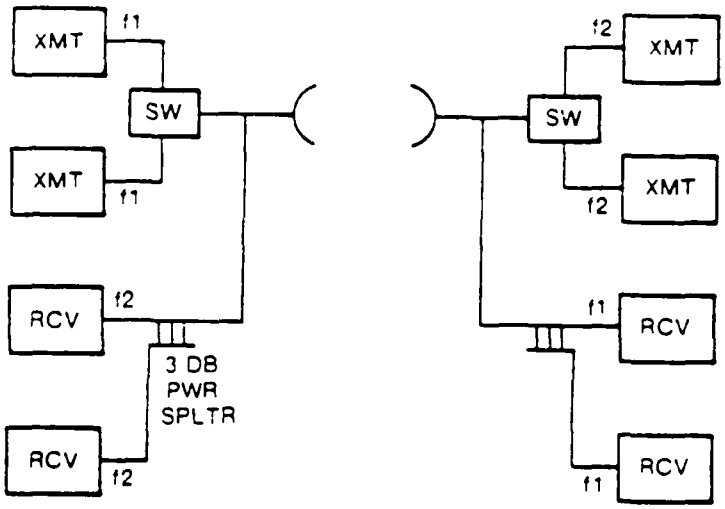

Figure 3-43. Power split receivers with hot standby transmitters.

c. MCS-11 Fault Alarm System.

d. ITT T324 Channel Bank Unit.

Individual module schematics are not discussed; rather, a block diagram level is used as the baseline so the reader may gain information at the more general system level.

3.2.5.1 MDR-() Series Radio. Rockwell-Collins currently offers a complete line of microwave digital radios, as well as a family of analog radios compatible with partial response techniques. The purpose of this subsection is to introduce these families of radios, providing a system technical description at the rack level, as well as individual subsystem descriptions. Table 3-3 summarizes the Rockwell-Collins digital microwave radio equipment available.

TABLE 3-3

MICROWAVE DIGITAL RADIO COMPARISON

Type	Description	Channel Capacity	Occupied RF Spectrum
MDR-12	12-GHz Digital Radio	672	20 MHz
MDR-11	11-GHz Digital Radio	1344	40 MHz
MDR-11-5	11-GHz Digital Radio	1344	40 MHz (5-watt twt)
MDR-11-5N	11-GHz Digital Radio	672	20 MHz
MDR-11-5N	11-GHz Digital Radio	672	20 MHz (5-watt twt)
MDR-8-5N	8-GHz Digital Radio	672	20 MHz (5-watt twt adjustable)
MDR-6	6-GHz Digital Radio	1344	40 MHz

3.2.5.1.1 MDR-() Regulatory Constraints. The chief external constraint in the digital radio design process arises from two FCC dockets. FCC docket 18920 on local distribution sets many of the criteria for users of digital systems. Among its other provisions, it establishes minimum distance criteria for microwave equipment in the 4-, 6-, 11-, and 18-GHz common carrier bands. This docket also sets minimum channel loading criteria for digital and analog systems. The loading limits require a digital user to show growth for 900 circuits in 5 years for 40-MHz bandwidth systems, and for 240 channels in 5 years for 20-MHz bandwidth systems at 11 GHz. At 6 GHz, a digital user must show growth for 900 circuits in 5 years for 30-GHz bandwidth systems. FCC docket 19311 on digital microwave establishes criteria for manufacturers of digital microwave equipment. Included in its provisions

are limits on emissions outside the authorized bandwidth and on scrambling. Its major provision is a limitation on the minimum number of equivalent voice circuits to be transmitted. This voice circuit limit was set at a minimum of 1152 channels for 4-, 6- and 11-GHz bands. These two dockets, along with the general provisions in Parts 2 and 21 of the FCC rules and regulations, establish the regulatory framework for digital transmission.

3.2.5.1.2 MDR-() System Description. Figure 3-44 is a block diagram of a digital radio terminal. The terminal consists of two main blocks: a muldem (multiplexer-demultiplexer) and a microwave digital radio. The function of the muldem is to multiplex as many as 56 DS-1 signals (1.544 Mb/s) up to 2 DS-3 signals (44.736 Mb/s), and conversely, to demultiplex 2 DS-3 signals down to 56 DS-1 signals. The DMX-13 upper level muldem is described in section 3.2.5.2. The function of the microwave digital radio is to transmit and receive these DS-3 signals with minimum errors. The transmit side of the interface in figure 3-45 combines the two asynchronous DS-3 signals and creates the three synchronous 30-Mb/s rails required to transmit the 90-Mb/s data using 8PSK modulation. Conversely, the receive side of the interface recovers the two DS-3 signals from the three 30-Mb/s rails. The 30-Mb/s output of the interface is split and connected to the two transmitters. On the receive side, a switch selects the better of the two received signals and connects it to the interface. A key feature is that the interface between the radio and the muldem meets the DSX-3 cross-connect criteria.

If the MDR-() series radio were to be configured as a repeater with no drops or inserts, the three 30-Mb/s rails could be carried directly across from receiver to transmitter (as shown in figure 3-45), thereby eliminating the requirement for the DS-3 (44.736 Mb/s) interface.

The narrowband version of the MDR-() series radio (-5N) would be identical to that shown in figure 3-44, except the three rails would be running at 15 Mb/s instead of 30 Mb/s, and there would be only one DS-3 signal at the interface point.

The MDR-() series radio may be logically divided into four fundamental subsections:

a. DS-3 Interface.

b. Transmitter.

c. Receiver.

d. Auxiliary Equipment.

The following paragraphs provide the reader with a fundamental block diagram knowledge of each of these digital radio sections.

3.2.5.1.3 MDR-() DS-3 Interface. The function of the DS-3 interface is to convert two DS-3 signals at 44.736 Mb/s to three 30-Mb/s signals, and vice

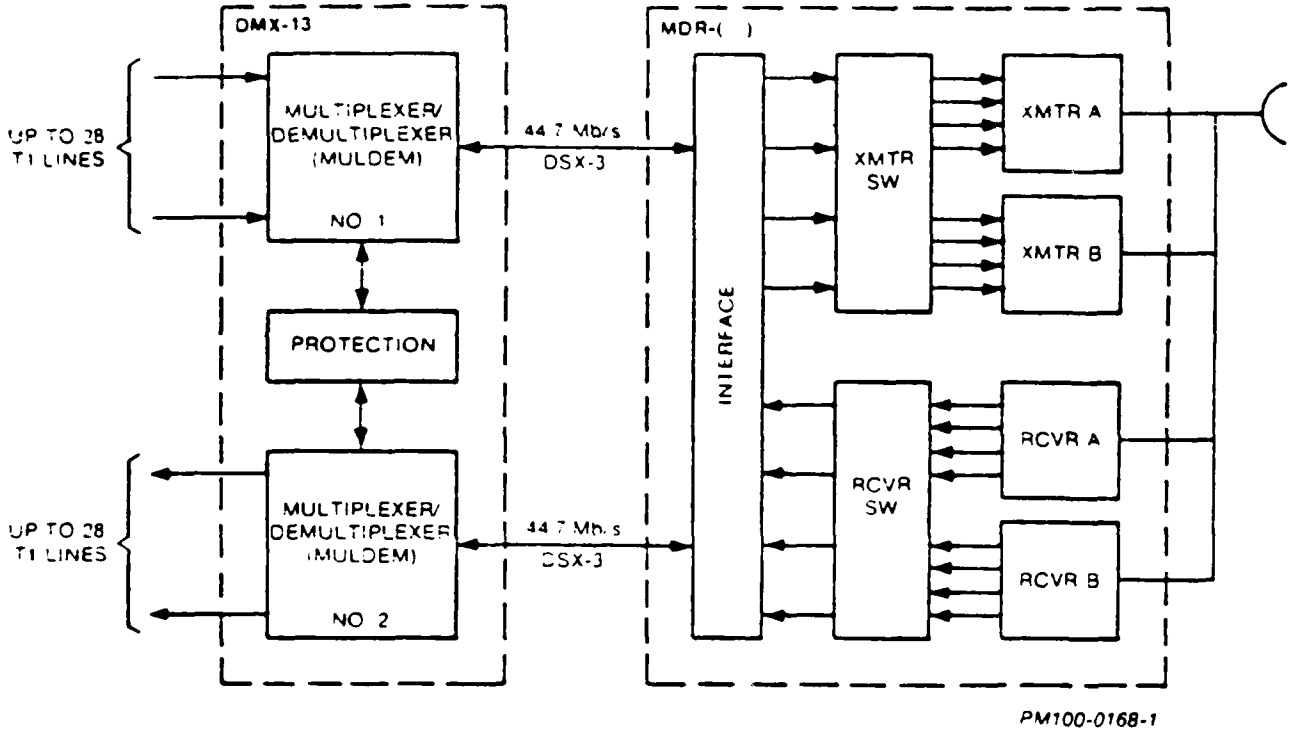

Figure 3-44. Digital radio terminal.

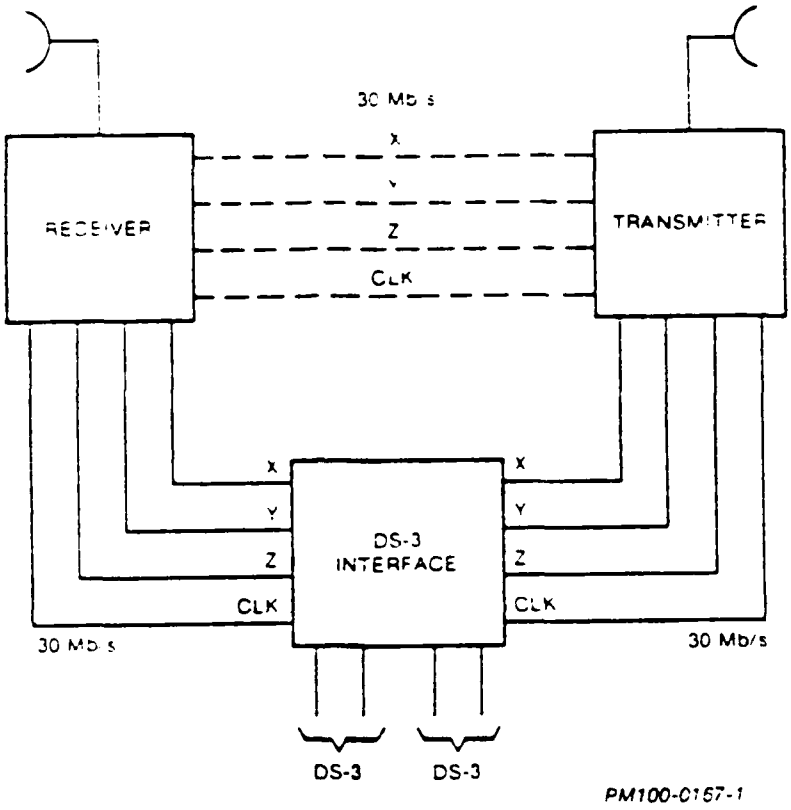

Figure 3-45. Digital radio repeater configuration (with no drops).

versa. Figure 3-46 is a block diagram of the DS-3 interface subsystem. The two DS-3 signals (in the transmit direction) enter the DS-3 interface through splitters to input conditioners. The configuration shown is for a 1:1 protected terminal. The input conditioners convert the bipolar format of the DS-3 signal to NRZ unipolar data and recover the clock for each of the DS-3 signals. The input elastic buffer clocks these two signals in at their 44.736-Mb/s rate and clocks out the data plus overhead bits at a typical 45.129-Mb/s rate. These two DS-3 signals are synchronized and are multiplexed with the radio frame and auxiliary channel data in the input rate converter to form three synchronous 30.086-Mb/s signals. Thus, with an input bit rate of 30.086 Mb/s and 3 input rails, the total bit rate is 90.258 Mb/s.

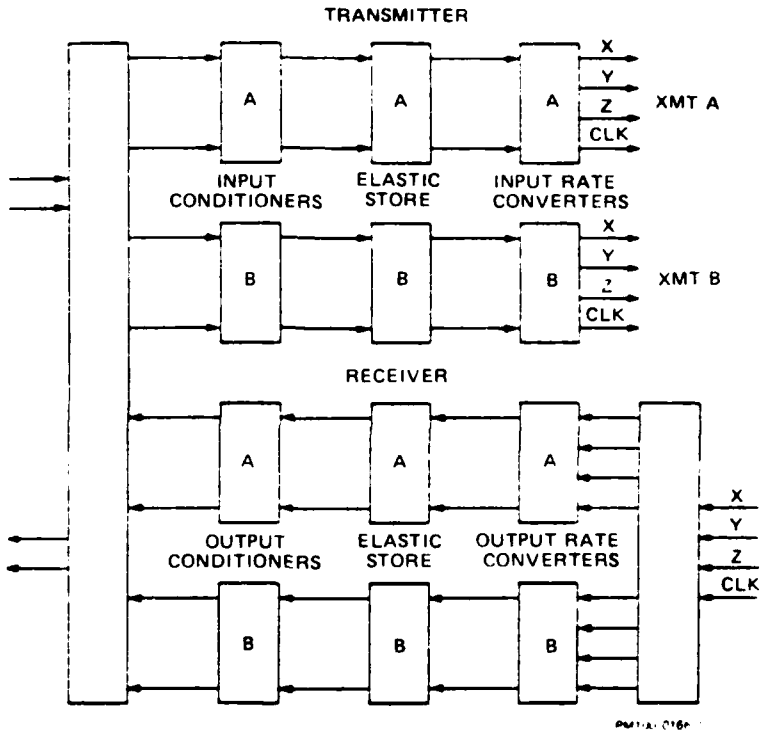

Figure 3-46. DS-3 interface.

The receive direction through the DS-3 interface subsystem is essentially the inverse of the transmit direction. The output rate converter recovers the two synchronous 45.128-Mb/s signals from the three 30-Mb/s signals. The output elastic buffer removes the stuff bits and smooths the two 44.736-Mb/s signals. Finally, the output conditioner restores the signal to the bipolar format with the B3ZS coding to meet the DSX-3 cross-connect criteria.

In 1:1 protected systems, the outputs of the two input rate converters are cross-coupled through switches to permit output from one or the other upon command of the switch control unit. The output is then split and fed to both transmitters. Similarly, the outputs of the two receivers are cross-coupled through switches, and the output of one receiver or the other is split and fed to the inputs of both output rate converters.

3.2.5.1.4 MDR-() Transmitter. Figure 3-47 is a block diagram of the transmitter section used in the MDR-() series radio. The input to the transmitter comes from the DS-3 interface in the case of a terminal or a repeater with drops. If the configuration is a repeater without drops, the input to the transmitter comes from the decoder modules in an MDR receiver. This input goes to the auxiliary channel modulator.

The auxiliary channel modulator serves two important functions. First, it inserts the data into the three rails for the twelve 32-kb/s auxiliary channels. These 12 auxiliary channels are provided to permit orderwire, fault alarm data, and other features to be added directly to the three digital bit streams. Second, it synchronizes to the radio framing bits and reports "loss of frame" if synchronization is lost. Furthermore, the auxiliary channel modulator monitors the incoming clock from the DS-3 interface and reports a "loss of clock" alarm if the clock is no longer present.

The encoder module also accomplishes two major tasks. First, it scrambles the data in a pseudorandom pattern to minimize the transmission of line spectra. Second, it differentially encodes the data to transmit the change in phase angle from the last phase angle transmitted rather than the absolute phase angle. This permits detection in the receiver without recovering an absolute phase angle equivalent to 0°.

Each of the three data lines are scrambled, but the X data scrambler feedback is modified by the Y and Z data feedback to the scrambler. This procedure ensures that a high error rate in the Y or Z data path between the scrambler in the transmitter and the descrambler in the receiver will also affect the X data. Because the X line carries the radio frame data, a loss of frame alarm will be generated in the receiver.

The 8 PSK modulator is a waveguide structure with three PIN diode phase-shift sections. The three data streams from the encoder module are amplified and applied to the PIN diodes for fast transition-time switching. The three phase shift sections are circulator combined to form a waveguide path from the frequency-stabilized Gunn oscillator to the IMPATT amplifier (or in the case of the 5-watt radios, the twt). In this manner, the phase angle of the RF signal is modified in accordance with the three data streams, X', Y', and Z'. The output of the 8PSK modulator is an RF signal modulated by a 90-Mb/s digital signal at a level of +10 dBm (10 mW).

The IMPATT amplifier module provides 23 dB of gain to the modulator output, which results in an output of +33 dBm from the amplifier. The amplifier has five stages. The first stage is a low-level Gunn diode amplifier. This is followed by four stages of IMPATT amplifiers. The output amplifier uses two diodes to achieve the output power level. The five cascaded, stable reflection

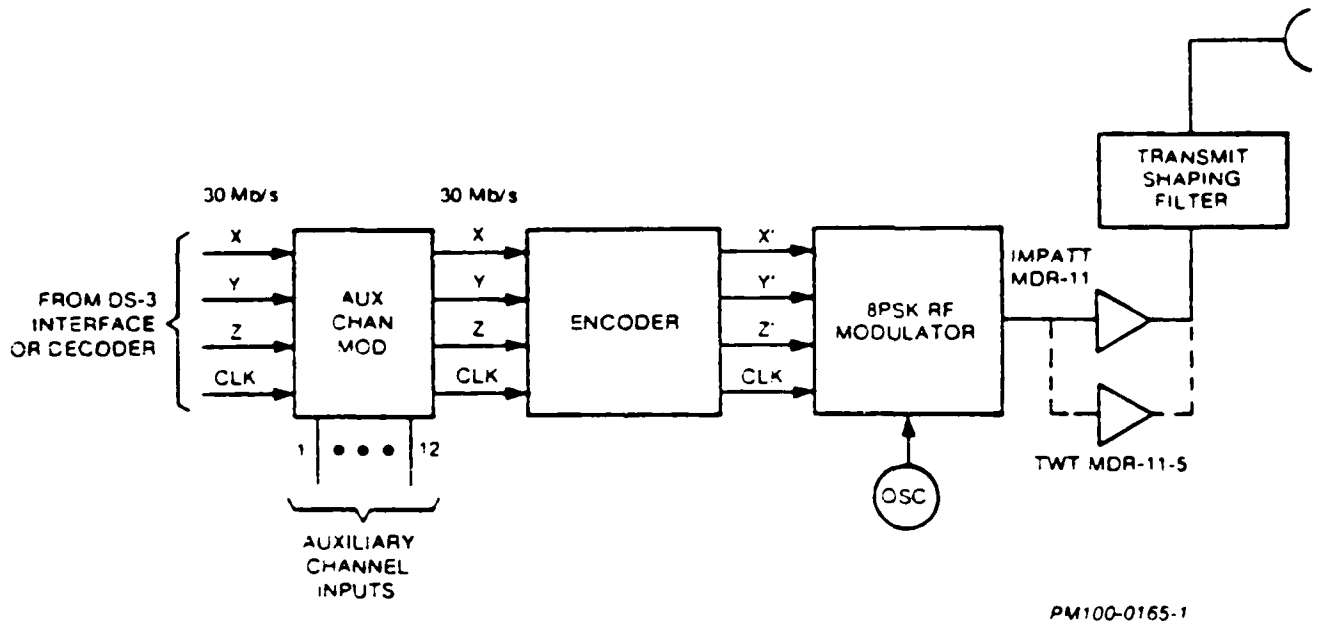

Figure 3-47. MDR-()/MDR-()-5 transmitter.

amplifiers have no spurious operation characteristics. The output goes to zero when the input goes to zero. A feature of the amplifier is that, should any of the diodes fail, the reduction in output power is approximately equal to the loss in gain of that stage. This feature, referred to as fail-soft operation, permits continued operation with slightly reduced fade margin until repairs can be made. The input, output, and interstage coupling are all protected by isolators to minimize interaction.

The MDR-() radio has the IMPATT amplifier for an output power of +30 dBm (1 watt) at the output of the transmit shaping filter. The MDR-()-5 uses a twt amplifier for an output of +37 dBm (5 watts) at the output of the transmit shaping filter. The MDR-()-5 is used for paths requiring extra system gain. In the case of the MDR-8, the radio is currently available only with the twt (5-watt) output, which is adjustable from a 1- to 5-watt output.

The transmit shaping filter is a 5-pole Chebischev design. The filter shapes the transmitted spectra to meet the FCC mask and obtain optimum performance, as previously discussed in section 3.2.3.3.1.

3.2.5.1.5 MDR-() Receiver. The receiver portion of the MDR-() is shown in block diagram form in figure 3-48. The received signal is coupled through a preselector filter into a low-noise mixer. The noise figure of the receiver at the input to the preselector filter is approximately 8 dB and at the input to the mixer is approximately 6 dB.

The low-noise mixer down-converts the RF signal to 70 MHz with the low side injection from the frequency-stabilized Gunn oscillator. The oscillator is identical to the oscillator used in frequency diversity versions of the MDR transmitter. The mixer contains an automatic gain control preamplifier at 70 MHz to extend the dynamic range of the receiver to 60 dB.

The output of the low-noise mixer is coupled to the intermediate frequency (IF) amplifier module. The IF amplifier sets the receiver noise bandwidth in the IF filter. The delay equalization for the filter is provided by six equalizer sections. These equalizers compensate for the IF and transmit filter differential delay. The IF signal is applied to system equalizers to compensate for system differential delay and small values (5 to 10 nanoseconds) of absolute delay. Finally, the output is amplified for coupling to the 8PSK demodulator unit.

The 8PSK demodulator recovers the data (X', Y', and Z') presented to the previous modulator by recovering a coherent carrier and comparing the received signal with that carrier to determine the relative phase angle. The 8-level ambiguity in the phase of the recovered carrier is resolved by the differential encoding/decoding. The unit also recovers the clock signal to synchronize an internal crystal oscillator used to provide noise reduction and timing alignment. Data detectors sample the phase-detected received signal at the optimal instant in time to regenerate the data. Eye pattern error detectors monitor the received signal to statistically determine the BER of the receiver.

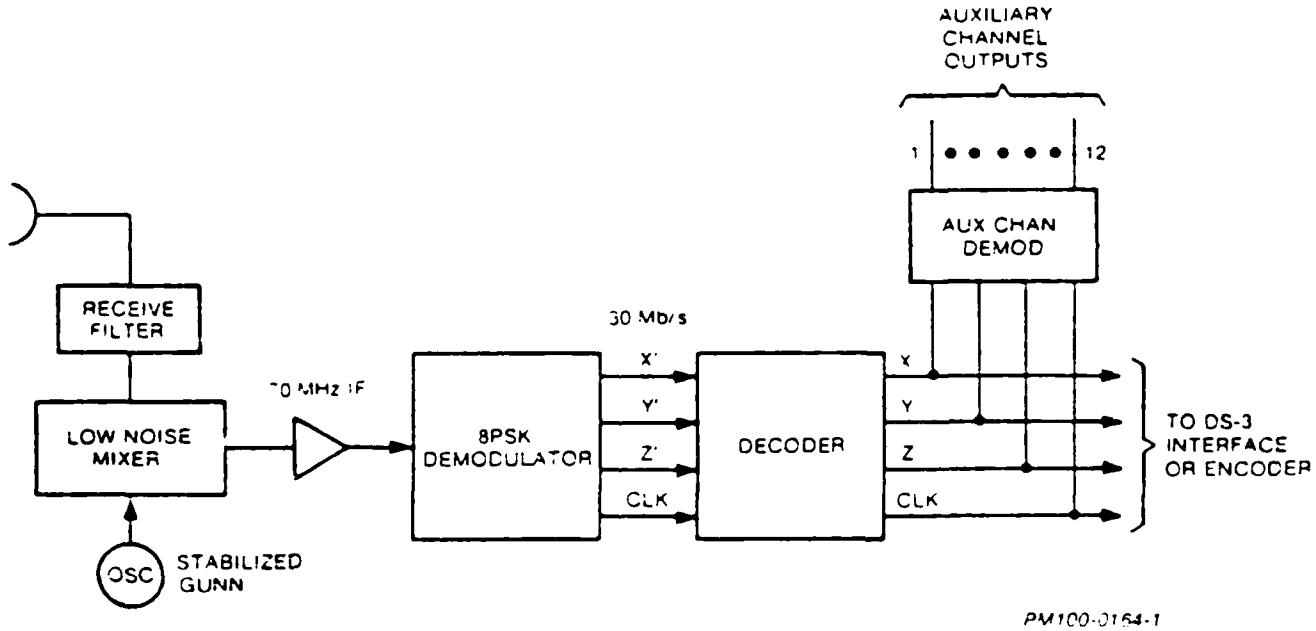

Figure 3-48. MDR-() receiver block diagram.

The output of the 8PSK demodulator is coupled to the decoder module, which removes the differential encoding and unscrambles the data. The output of the decoder module then goes to the DS-3 interface (if the configuration is a terminal or a repeater with drops) or to the encoder module (if the configuration is a repeater without drops).

The auxiliary channel demodulator monitors the radio frame bits on the X data bus and selects the 12 auxiliary channels from the Y data bus. The auxiliary channel demodulator then demultiplexes these 12 channels and regenerates the 32-kb/s clock signal. The auxiliary channel demodulator also generates an alarm when the frame being detected has been inserted by a previous auxiliary channel modulator.

3.2.5.1.6 MDR-() Auxiliary Equipment. The auxiliary equipment in an MDR bay contains the orderwire, fault alarm, display, and switch control equipment required to permit a protected terminal to be contained in a single bay. The auxiliary equipment provides the insertion of the twelve 32-kb/s auxiliary channels in the transmit direction, while providing for the demultiplexing of the 12 channels in the receive direction. Table 3-4 illustrates the functions of each of the 12 channels.

TABLE 3-4

FUNCTIONS OF THE 12 CHANNELS

Channel	Function	Channel	Function
1	Express Orderwire	7	Frequency Diversity Switching
2	Express Orderwire	8	Unassigned
3	Fault Alarm	9	Unassigned
4	High-Speed Analog	10	Unassigned
5	Orderwire	11	Unassigned
6	Frequency Diversity Switching	12	Unassigned

Channels 1 and 2 are assigned to express orderwire and are extended to equipment outside the rack. Channel 3 is dedicated to fault alarm reporting of the MDR equipment. Channel 4 is used to monitor and report analog voltages associated with various power supplies. Channel 5 is assigned for a partyline orderwire, which is the network primarily used for system maintenance. Channels 6 and 7 are responsible for switching of the appropriate transmitter and receiver and are used in frequency diversity applications only.

3.2.5.2 DMX-() Digital Muldem. The purpose of this paragraph is to provide a fundamental working knowledge of the Rockwell-Collins product line of digital muldems. Currently, four digital multiplex systems are offered, as outlined in table 3-5.

TABLE 3-5

DIGITAL MULTIPLEX SYSTEMS

Type	Description
DMX-12	Combines up to 96 VF channels into a. 3-level partial response b. 6.3-Mb/s bit stream
DMX-13 A,B,C*	Combine up to 1344 VF channels into 2 discrete T-3 carriers.

*Differences in the A, B and C models involve means of protection only, not voice capacity.

3.2.5.2.1 DMX-() System Description. In the design of a multiplexer family such as the DMX-13 A, B and C, one of the fundamental considerations is providing a low-cost and reliable means of dropping or inserting a single channel (T-1 line). In the worst case at a repeater, it would be necessary to provide terminal hardware to allow for drop and insert. The design challenge, then, is to provide a method of drop and insert that uses less hardware than that provided for the same number of channels at a terminal. In addition, it would be desirable to use standard interfaces and modules that are identical to those used at the terminals.

Naturally, another fundamental design criterion is to provide all the necessary interfaces in a standard fashion. That is, all interfaces should be compatible with the Bell System digital hierarchy, discussed in section 3.2.3.

Redundancy of the various DS bit streams is also an important design criterion. TDM systems may be compared to FDM in that the T-1 level (1.544 Mb/s) is comparable to a group in FDM. In most FDM systems, the group level is nonredundant. Similarly, in TDM, the T-1 level is nonredundant. The second multiplex tier (6.312 Mb/s) is roughly comparable to the supergroup in an FDM system. In the majority of FDM systems, the supergroup is protected with standby circuits on a 1:1 basis. In the TDM world, protection circuits at the DS-2 level are provided optionally on a 1:N basis. Most TDM systems use 1:7 protection, with a few using 1:14. In TDM, the DS-3 level (44.736 Mb/s) is equivalent to the mastergroup used in FDM systems. This DS-3 bit stream is also commonly referred to as the high-speed equipment and is usually protected on a 1:1 basis. However, for a dual T-3 system (i.e., 90 Mb/s) it is more convenient to protect on a 1:2 basis. The following chart reflects redundancy requirements as they differ among the DMX-13 A, B and C.

13 A - 1:1 automatic high-speed protection for one T-3 (672 channels).

1:2 automatic high-speed protection for two T-3 (1344 channels).

Provisions for expansion to automatic or manual low-speed protection.

13 B - 1:1 automatic high-speed protection for one T-3 (672 channels).

1:2 automatic high-speed protection for two T-3 (1344 channels).

1:4 manual low-speed protection (DS-1 and DS-2).

Provisions for expansion to automatic low-speed protection.

13 C - 1:1 automatic high-speed protection for one T-3 (672 channels).

1:2 automatic high-speed protection for two T-3 (1344 channels).

1:14 automatic low-speed protection (DS-1 and DS-2).

Also uses a bit-by-bit comparison technique from input to output for error detection.

Figure 3-49 is a block diagram illustrating the three basic subsections in the DMX-13():

a. DS-1/DS-2 equipment.

b. DS-3 equipment (high-speed).

c. LBO/switch equipment.

As illustrated, either 56 independent T-1 digital signals or up to 14 T-2 digital signals may be combined into two T-3 carriers for transmission or decombined in the receive direction. The DMX-13 first multiplexes four 1.544-Mb/s data streams into a DS-2 (6.312-Mb/s) digital signal. This operation, along with necessary framing and bit stuffing, takes place in the DS-1 low-speed equipment. Seven DS-2 signals are then combined in the high-speed equipment to provide a 44.736-Mb/s output. The LBO/switch equipment is provided only in the DMX-13 B and C versions to provide necessary redundancy.

3.2.5.2.2 DS-1/DS-2 Equipment. The DS-1/DS-2 equipment (commonly referred to as the low-speed interface equipment) consists of the following:

a. DS-1 Interface Modules.

b. Low-speed Transmit Common Modules.

c. Low-speed Receive Common Modules.

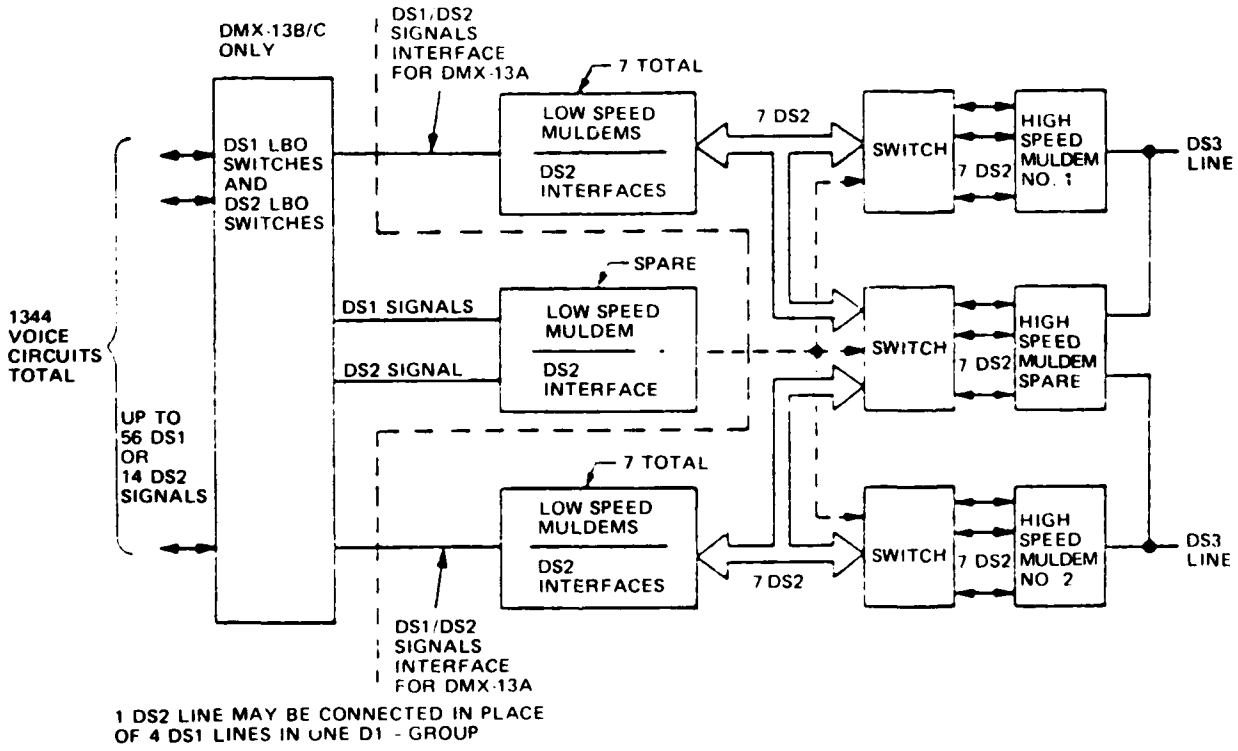

Figure 3-49. DMX-13( ) terminal block diagram.

d. DS-2 Transmit Module.

e. DS-2 Receive Module.

} If DS-2 is required.

Figure 3-50 illustrates the DS-1 interface equipment. Note the standby rails existing both from the low-speed transmit equipment and to the low-speed receive equipment. Four DS-1 interface modules are connected to each set of low-speed transmit and receive common modules. The transmit module multiplexes four T-1 lines into one DS-2 signal (6.312 Mb/s), while the receive module demultiplexes each DS-2 line into its constituent T-1 digital signals.

As discussed in section 3.2.3.1, the standard DS-1 digital signal is in a bipolar format; i.e., it has no dc component. Therefore, in the transmit direction, each DS-1 interface module must first convert the input bipolar signal to a unipolar format and then extract the timing from each T-1 digital signal. Transmit data is sent to the low-speed transmit unit, which generates the necessary clock for four DS-1 interface units and combines the data inputs of the four interface units, along with necessary framing and stuffing bits, to form a DS-2 bit stream (6.312 Mb/s).

In the receive direction, the low-speed receive module generates timing signals for demultiplexing the data stream into four 1.544-Mb/s outputs. Stuff bits added at the transmit end are detected and deleted. The received data is routed to the DS-1 interface module, where it is converted back to a bipolar DS-1 signal.

The DS-2 equipment (illustrated by figure 3-51) is used to provide the necessary interface between the DS-2 input and the high-speed equipment (44.736-Mb/s point). In the transmit direction, the DS-2 transmit equipment converts the 6.312 Mb/s to emitter-coupled logic (ECL) levels used in the high-speed shelf. Necessary stuffing of the data is also performed, so the 6.312-Mb/s data rate is maintained. In the receive direction, the DS-2 receive equipment is used to convert ECL to bipolar levels and clock the data from the high-speed receive equipment.

3.2.5.2.3 DS-3 Equipment (High-Speed). The DS-3 equipment in the DMX-13 consists of the following modules:

a. High-speed Transmit Interface Module.

b. High-speed Transmit Common Module.

c. High-speed Receive Common Module.

d. DS-3 Interface Module.

Figures 3-52 and 3-53 illustrate the high-speed transmit and receive equipment functions.

Either seven low-speed commons or seven DS-2 interfaces connect to one set of high-speed modules. In the transmit direction, the high-speed transmit modules combine data streams from seven low-speed transmit units and add overhead,

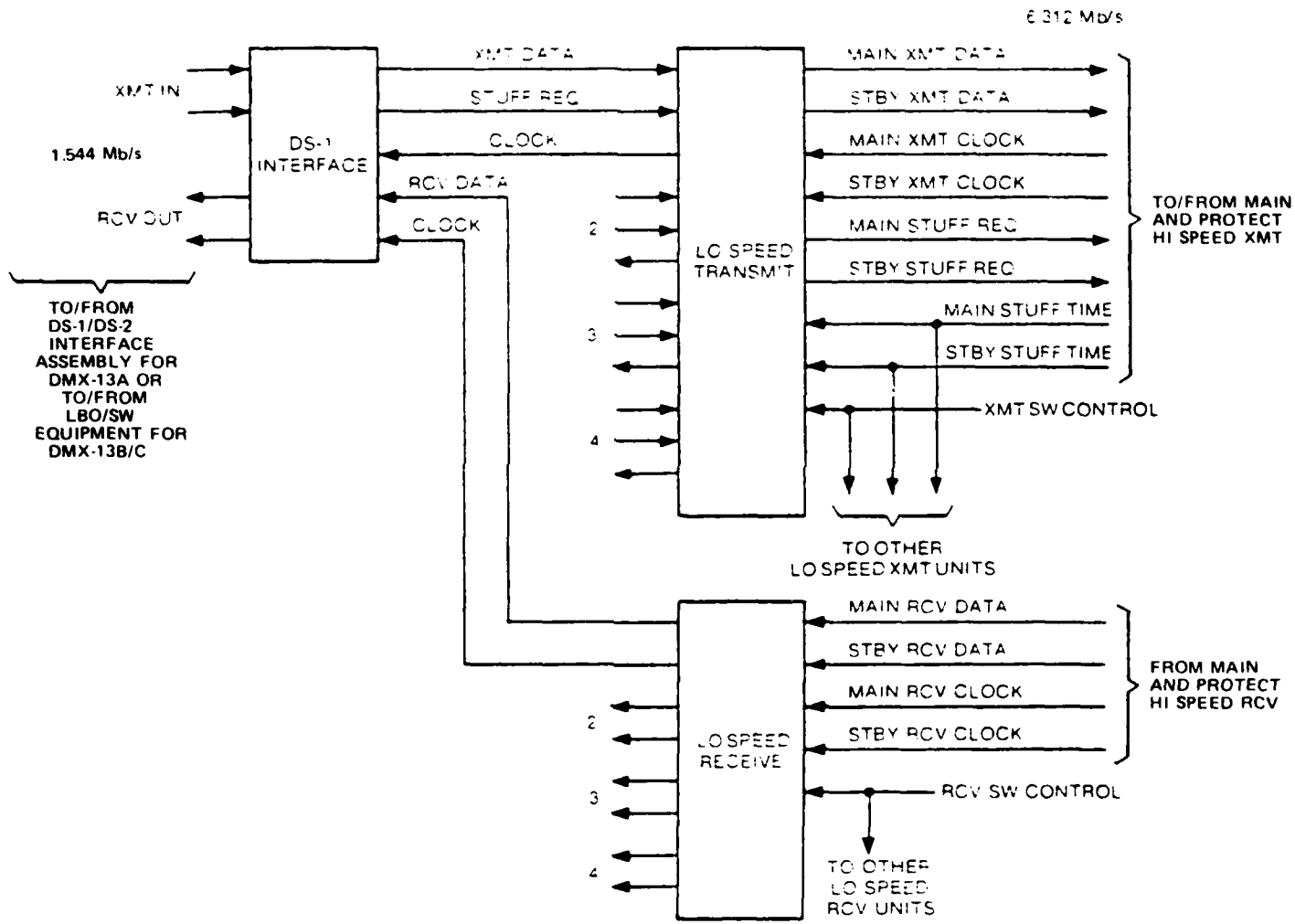

Figure 3-50. DS-1 low-speed equipment modules.

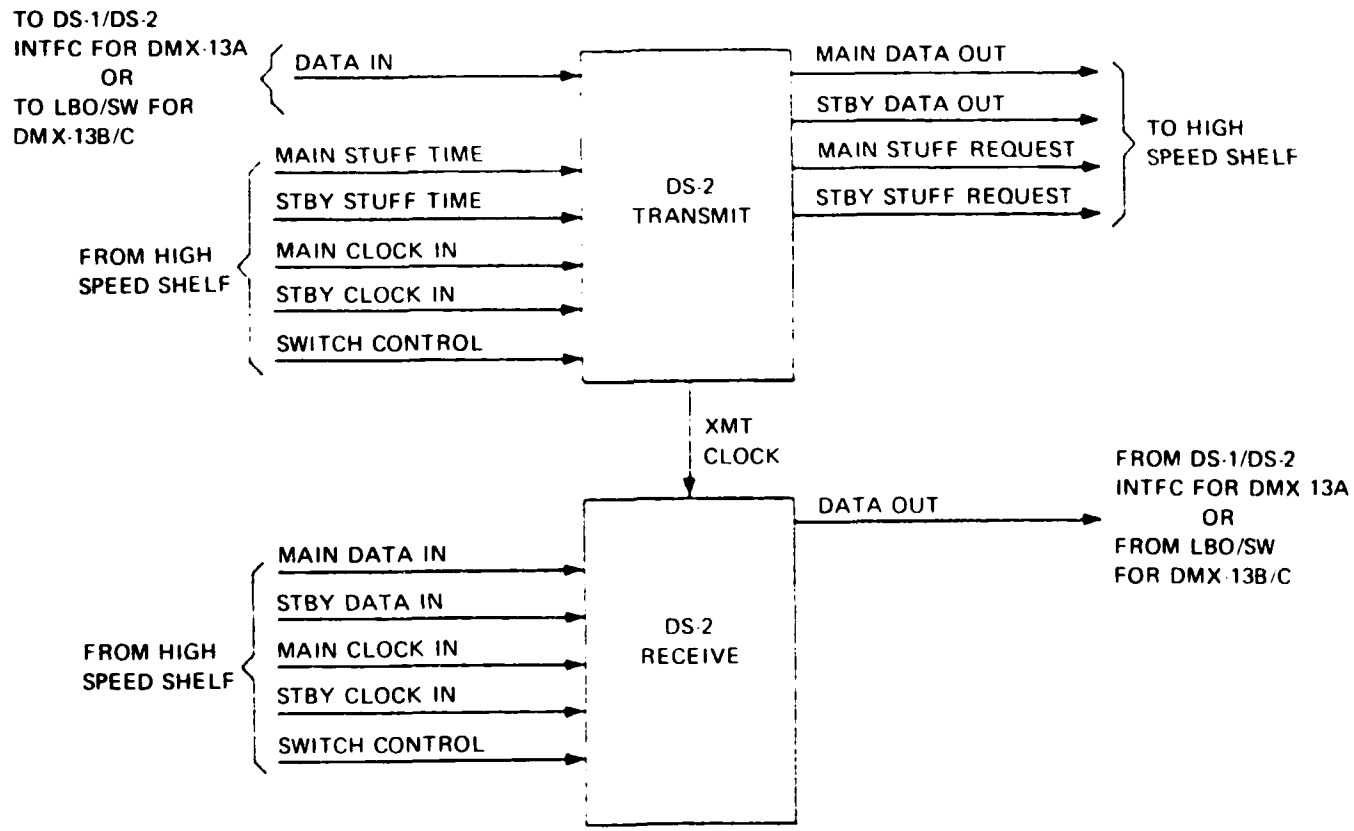

Figure 3-51. DS-2 equipment modules.

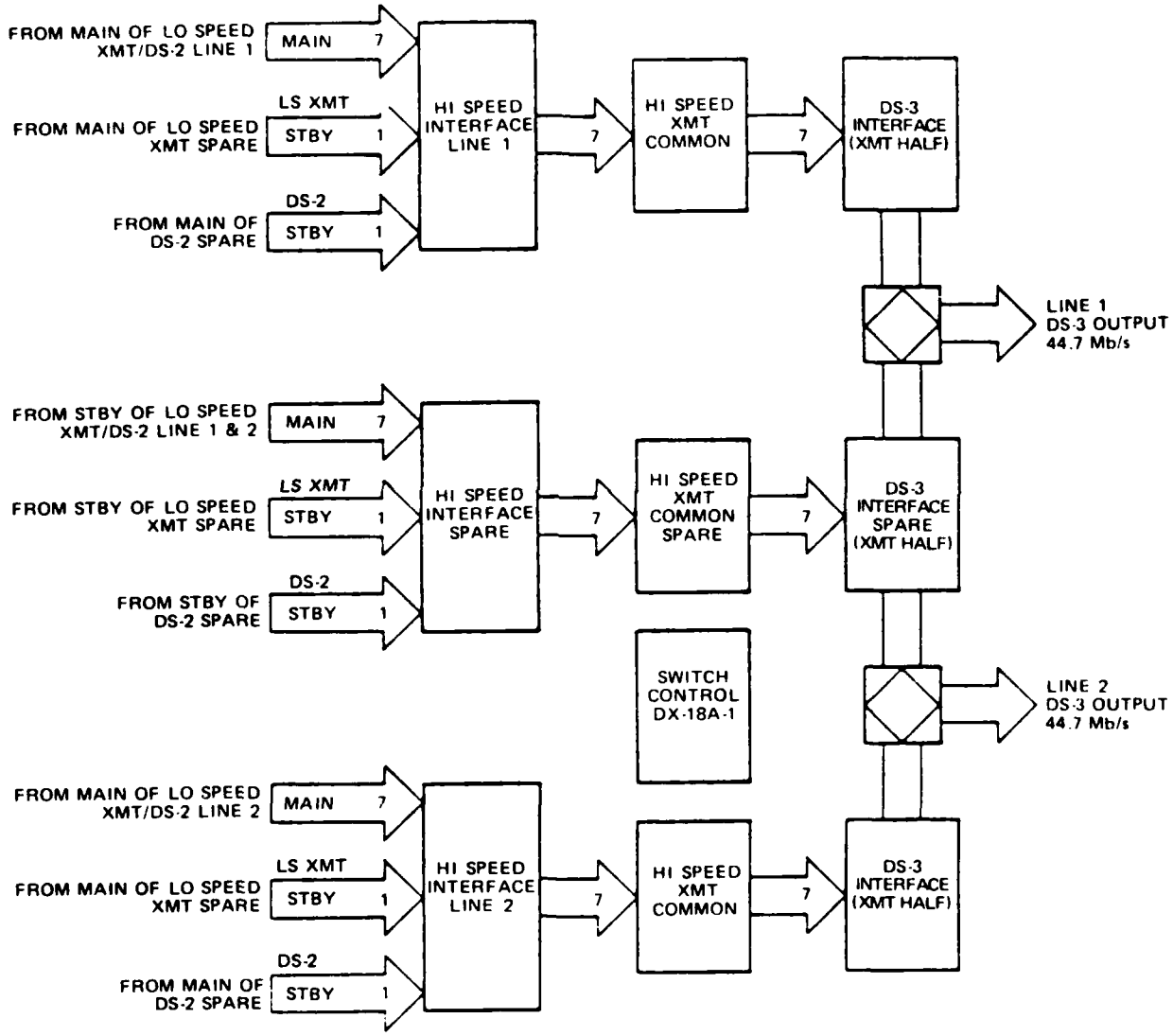

Figure 3-52. High-speed transmit equipment signal flow.

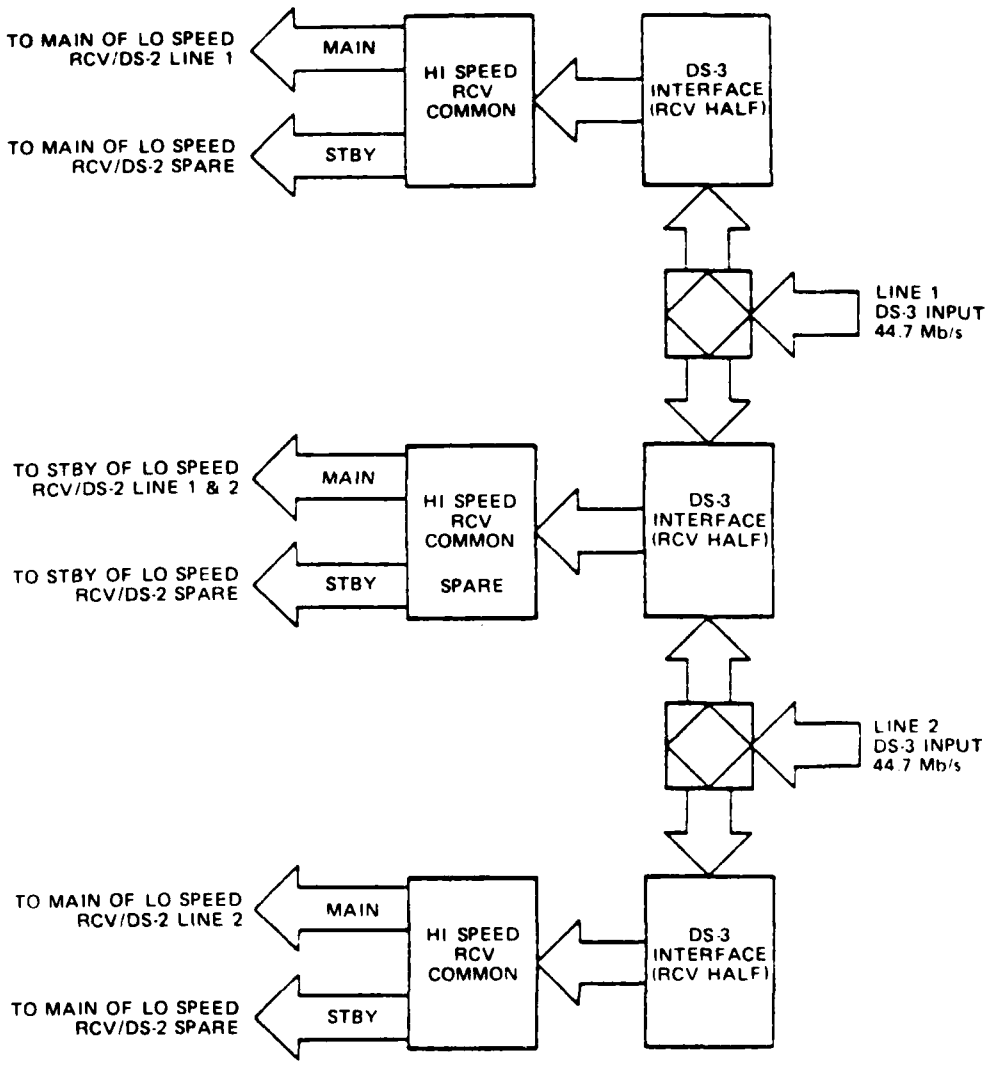

Figure 3-53. High-speed receive equipment signal flow.

consisting of stuff bits and frame synchronization, to form a 44.736-Mb/s data stream. In the case of the DMX-13 B and C versions, the high-speed interface module provides for switching of a standby low-speed rail in the event one of the seven 6.312-Mb/s digital signals fails. This signal is routed to the DS-3 interface unit, where it is converted to a B3ZS (bipolar with three zero substitution) signal compatible with DS-3 interface specifications. The DS-3 interface unit also generates a 44.736-Mb/s clock (master synchronizing signal), which is routed to the high-speed transmit modules and distributed to seven low-speed circuits.

In the receive direction, the receive section of the DS-3 interface module converts the B3ZS DS-3 signal to an ECL signal compatible with the high-speed receive unit. The clock is extracted from the received signal and routed to the high-speed receive module. The DS-3 signal is demultiplexed into seven 6.312-Mb/s signals, and stuff and frame bits added at the transmit end are detected and deleted. The high-speed receive unit regenerates the seven 6.312-Mb/s clock circuits for the low-speed equipment. In the DMX-13 B and C versions, the receive unit routes one of the seven data signals to the low-speed protection spare during a low-speed failure.

3.2.5.2.4 LBO/Switch Equipment. A set of four duplex DS-1 signal lines connect through the input/output wirewrap pin block to a DS-1 LBO/switch module. A set of duplex DS-2 signal lines also connects through the pin block to a DS-2 LBO/switch module. The LBO/switch modules provide LBO for extended line use and a switching path to and from spare low-speed modules.

Each DS-1 LBO/switch connects a group of four DS-1 signal lines to 4 out of 56 DS-1 interface modules in a muldem. Each DS-2 LBO/switch connects a DS-2 signal line to 1 of 14 pairs of DS-2 transmit interfaces and DS-2 receive interfaces.

The LBO network used for each DS-1 line is provided in three versions, with the application dependent upon the type of cable and its length. For pertinent details concerning the LBO/switch equipment, refer to the DMX-13 A, B and C Instruction Manual.

3.2.5.3 MCS-11 Fault Alarm System. One of the first decisions to be made in the design of a monitor and control system for a digital radio is whether to use analog or digital multiplexing for combining the monitor and control information with the digital baseband. Most existing monitor and control systems were designed for use with analog radio systems and use a combination of TDM and FDM. One or several tones in a voice channel are FSK-modulated by the digital (TDM) monitor and control signals. This results in a basic analog monitor and control system that, if used with a digital radio, would place additional constraints on an otherwise all-digital transmission system.

Selection of an all-digital TDM approach is the best choice for interfacing the digital monitor and control system with a digital radio such as the MDR series. This approach is easy to implement, and no additional modulation or multiplexing steps are required. The MCS-11 monitor and control system uses two 32-kb/s auxiliary channels in the microwave digital radio. Auxiliary

channel 3 is used for polled fault reporting, while channel 4 may be used for continuous analog monitoring of remote sites. An FSK modem may be added if the MCS-11 is used with an analog radio system.

Three basic functions are incorporated into the MCS-11 system:

a. Two-level alarm monitoring.

b. Integration of the basic MCS-11 system into the MDR radio.

c. Discrete alarm display for troubleshooting purposes.

Two-level alarm monitoring provides continuous reporting of summary alarms and reporting of more detailed module-level alarms, as required for remote troubleshooting. Time required to update all alarm reports for a system is considerably reduced by limiting continuous reporting to only major and minor summary alarms. Summary alarms provide the operator with system status information while providing limited diagnostic capability. Detailed module-level alarms are reported on demand for use by technical personnel in troubleshooting the cause of the summary alarm before traveling to the remote microwave station. This enables the technician to determine the precise location of the fault, so logistics problems are reduced. Integration of the basic MCS-11 system into the MDR-() auxiliary shelf reduces the need for an additional rack. External cabling for connecting alarm points into the MCS-11 is reduced because the radio alarms are directly connected in the radio rack. Discrete alarm displays are provided at the appropriate maintenance facility and allow technicians to determine problem areas from the remote sites.

3.2.5.3.1 System Technical Description. Figure 3-54 illustrates the basic MCS-11 system as used in a totally digital environment. The basic system consists of a polling transmitter and master station receiver at the master station and a remote station receiver and remote station scanner at the remote station. These MCS-11 modules use one of the auxiliary channels in the MDR radio for transmission of data.

Each remote station scanner is strapped for a different binary address, so that no two stations have the same address. The master station receiver is programmed to poll automatically each of the remote station scanners that it supervises. Operation of this basic MCS-11 system is described in the following paragraphs.

The master station receiver provides the polling transmitter with the address of the next remote station scanner to be polled. The polling transmitter transmits the remote station scanner address and a request for status serially to the auxiliary channel insert, which multiplexes the signal into the radio data stream.

At the remote station, the auxiliary channel drop demultiplexes the MCS-11 signal from the radio data stream and transmits it serially to the remote station receiver. The remote station receiver provides the received address to the remote station scanner on a parallel bus. If the received address is the same as the address for which the remote station scanner is strapped, then the remote station scanner loads the 32 alarm inputs and transmits them serially to the auxiliary channel

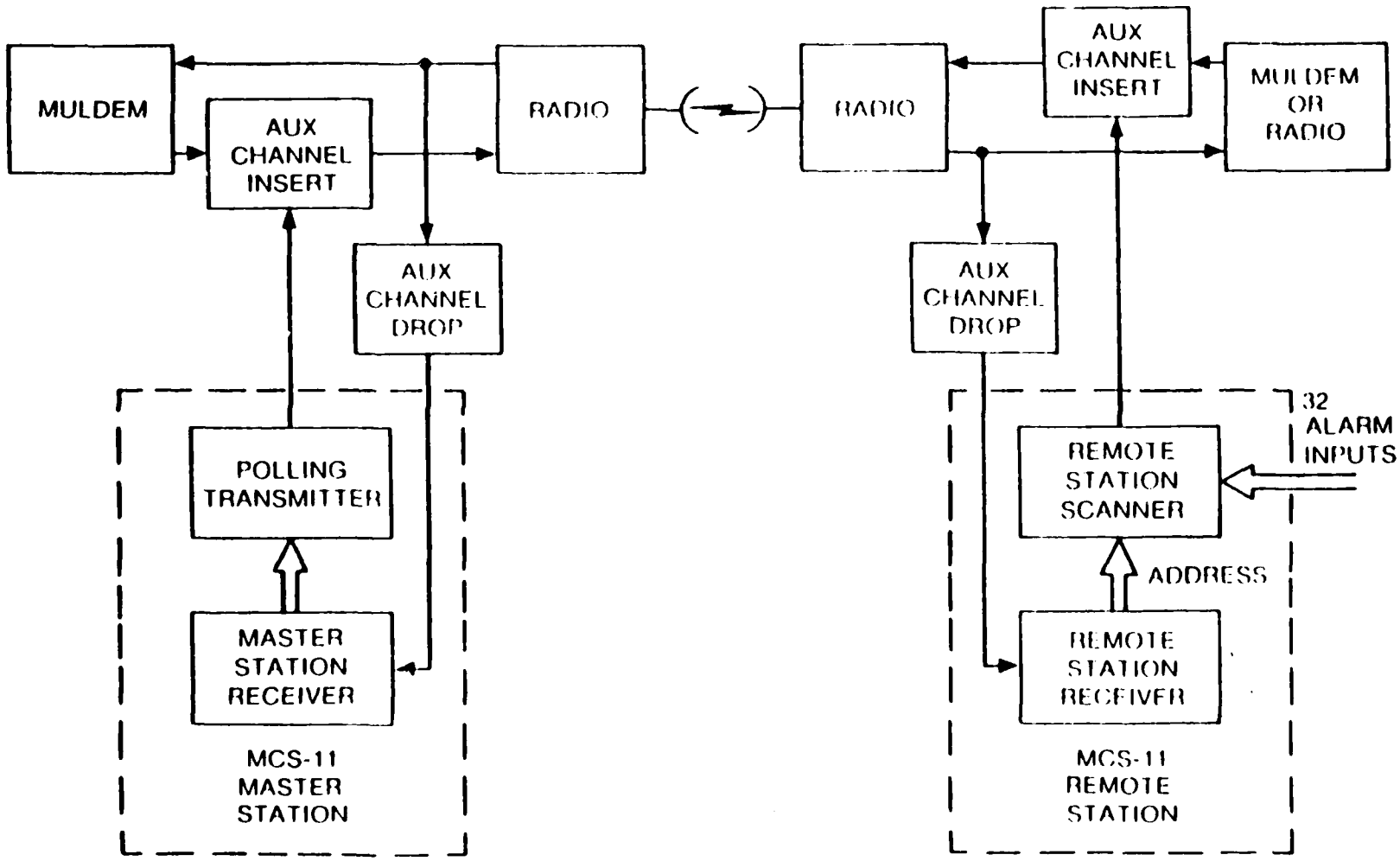

Figure 3-54. Block diagram of the basic MCS-11 system.

insert. The auxiliary channel insert multiplexes the remote station scanner data into the radio data stream for transmission back to the MCS-11 master station through the MDR radio system and the auxiliary channel drop at the master station.

Alarm data is received by the master station receiver, stored internally, and displayed on the LED (light-emitting diode) panel of the receiver. Because the alarm information is stored internally, the operator or technician is not required to be at the site on a continuous basis. Alarms of a momentary nature can be cleared at the master station. If an alarm is not of a momentary nature, it can only be cleared manually at the remote site. Such a fault would require the maintenance team to travel to the applicable site for further module-level troubleshooting.

3.2.5.3.2 Master Station Receiver. The master station receiver provides three forms of information to the operator (see figure 3-55). First, a column is provided to inform the operator whenever a particular remote station has been placed into service. An LED associated with the particular remote station will be illuminated whenever the station is placed into service. The appropriate LED in the second column will light whenever a change of status (COS) takes place at any remote station. This LED will light on a COS from "no alarm" to "alarm" or on a COS from "alarm" to "no alarm." The third group of indicators provides the operator with the status of all 32 alarm points associated with the alarming station. These 32 points are accessed manually by the operator and will not be displayed unless requested. When all alarms have been analyzed by the technician, the location of the fault can be determined and appropriate maintenance crews, along with test equipment, may be dispatched to the problem location.

The in-service row of lights indicates which stations are active and being polled at a particular time. Note that up to 16 remote station receiver/scanner combinations may be polled from a single master station receiver. The COS/NRPT lights illustrate which stations have either reported a COS or did not report (NRPT) during the last polling cycle. If a particular LED in the COS/NRPT column comes on continuously, a COS indication is present, and the 32 alarm points associated with that station may be observed by dialing the appropriate station number with the switch in the lower right-hand corner of the panel. If the LED in the COS/NRPT column flashes, then the indication is that the station associated with that LED did not report during the last polling cycle.

The 32 points on the far right of the master receiver (DATA) are the major and minor alarms associated with the selected remote station. At the remote station the remote receiver, mounted in the MDR rack, is wired into the major and minor alarms of the radio. Each MDR rack has associated with it the following eight summary alarms:

a. 'A' transmit major.

b. 'A' transmit minor.

c. 'B' transmit major.

d. 'B' transmit minor.

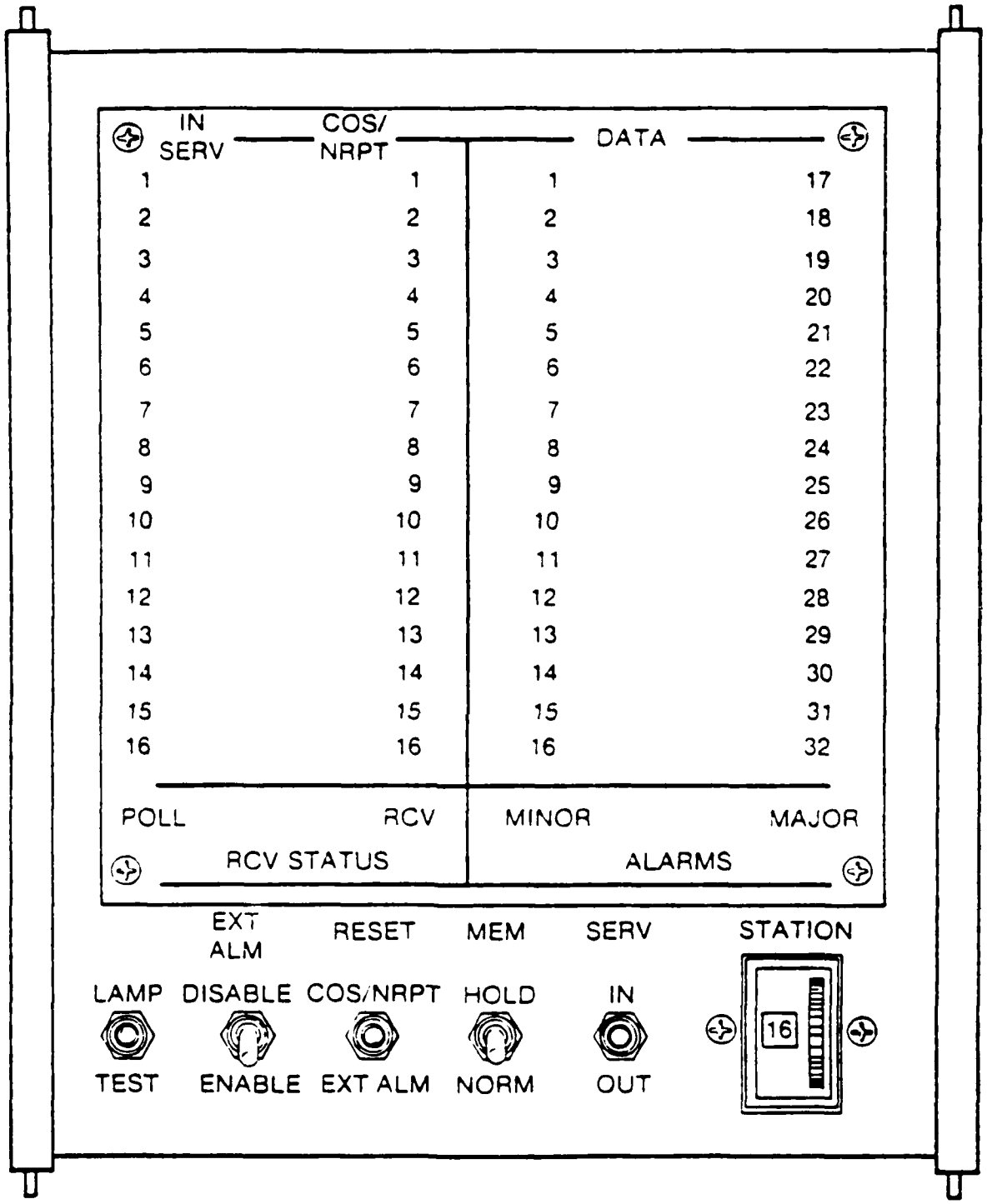

Figure 3-55. Master station receiver.

e. 'A' receive major.

f. 'A' receive minor.

g. 'B' receive major.

h. 'B' receive minor.

Therefore, if a site has two radio racks being serviced by one remote station receiver, 16 of the 32 alarm points will be used for major and minor alarms, while the other 16 alarms are left for general housekeeping functions such as the following:

a. Battery charger alarms.

b. DMX-13 multiplexer alarms.

c. Channel bank unit alarms.

The MCS-11 system uses a redundant format in the control and data word formats. Figure 3-56 illustrates the word format used. The poll word transmitted from the master station to the remote station requests an alarm status report. The word transmitted contains the address of the remote station scanner.

The data word, which is transmitted from the remote station to the master station, contains the alarm status report (data) of the remote station. The address transmitted is the address of the remote station.

In both the data word and the poll or control word, the address, control, and data transmissions are repeated (transmitted twice), as shown in figure 3-56. That is, the same eight address bits are transmitted in the first part of the word and in the last part of the word. Likewise, the same eight control bits are transmitted in each part of the control word. The start pattern (SP) identifies the beginning of each word, and the word identification (WID) tells the kind of word (control, data, etc.) being transmitted. A parity bit (odd parity) is transmitted as the last bit in each word.

Four checks are made to ensure accuracy of the data and to reduce false alarms caused by transmission errors:

a. At the remote station, the address and control bits in the two parts of the poll word must agree with each other before the remote station reports its alarm status. An error in any of the 32 bits will prevent a status report on that poll.

b. At the master station, the address and data bits in the two parts of the data word received from the remote station must agree with each other before the master station receiver will accept the data.

c. The address in the data word received at the master station must agree with the address that was transmitted from the master station in the poll word.

d. Each control and data word received is checked for odd parity and rejected if parity is incorrect.

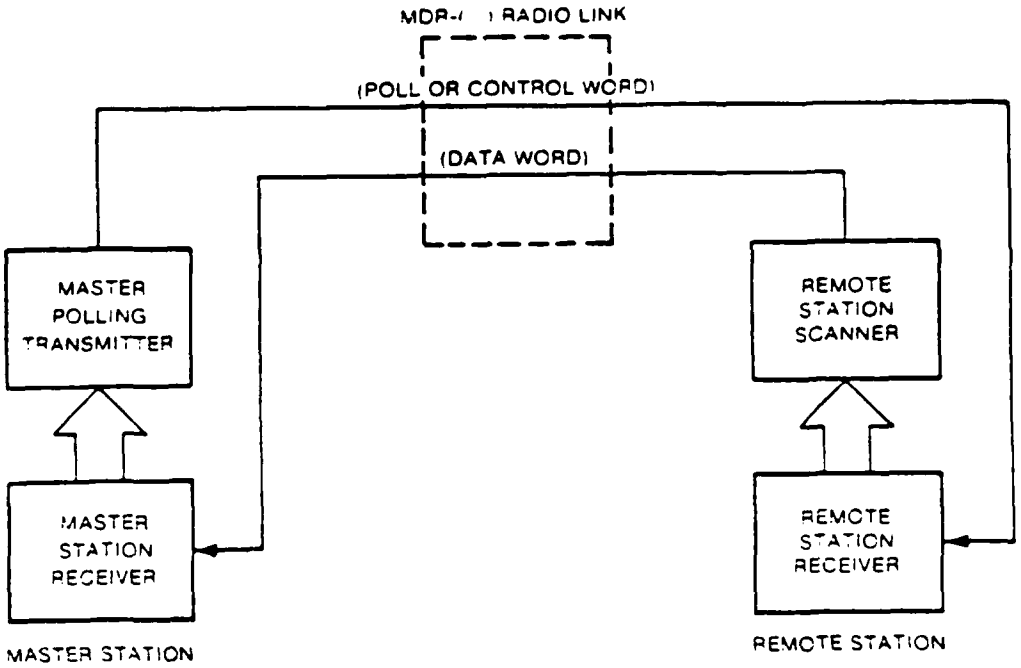

(MASTER TO REMOTE)

POLL OR CONTROL WORD

NUMBER OF BITS →	2	2	8	8	8	8	1
	SP	WID	ADD	CON	ADD	CON	P

(REMOTE TO MASTER)

DATA WORD

NUMBER OF BITS →	2	2	8	32	8	32	1
	SP	WID	ADD	DATA	ADD	DATA	P

SP — START PATTERN
WID — WORD IDENTIFICATION
ADD — ADDRESS
DATA — DATA FROM REMOTE TO MASTER
CON — CONTROL FROM MASTER TO REMOTE
P — PARITY BIT

Figure 3-56. Word format.

The basic MCS-11 system can be expanded to supervise as many as 256 remote addresses, with an additional master station receiver added for each 16 remote addresses. When other functions (such as remote control) are added, 128 of the remote addresses are reserved for these functions. A second auxiliary channel can also be used to double the size of the system.

Troubleshooting capability is added with the master detail receiver at the master station and remote detail scanner at the remote station. The master detail receiver displays 62 alarm points for each rack of MDR-() equipment. This display gives more troubleshooting information than the eight summary alarms displayed by the master station receiver. A panel view of the master detail receiver is shown in figure 3-57. The alarm display part of the unit is identical to the display unit mounted in each MDR-() rack. The 3-digit meter display is used to remotely select and read voltages and signal levels.

The master control unit (shown in figure 3-58) at the master station and the remote control decode and remote control interface at the remote station provide capability for remote control. Manually controlled switching of communications functions, such as switching a digital baseband signal to a spare channel, can be accomplished remotely. Periodic maintenance checks of various station equipment, such as diesel engine/generator sets, are also feasible.

A block diagram of the master station expanded to include a second master station receiver, a master detail receiver, and the master control unit is shown in figure 3-59. The master supervisory unit is used to control the operation of the other units, so that each unit polls its remote addresses in turn and only one unit is transmitting at a time. The master control unit transmits controls only on operator command.

Figure 3-60 shows a remote station with capability to transmit detail alarms and to remotely control 16 functions. The remote control decoder associated with the remote control interface provides control status information to be displayed on the master control unit.

Space is provided in the auxiliary shelf of the MDR-() at a repeater station for all of the functions described. At the master station, the MCS-11 equipment is housed in a separate shelf.

3.2.5.4 ITT T324 Channel Bank Unit. The ITT T324 Channel Bank Unit, commonly referred to as the T324 Trunk Carrier System, multiplexes up to 24 voice channels into a DS-1 digital signal (1.544 Mb/s). This T-1 carrier is routed to the low-speed DS-1 equipment within the DMX-13 A, B or C for subsequent multiplexing to the DS-3 level (44.736 Mb/s). Conversely, in the receive direction, the T324 Trunk Carrier System demultiplexes the T-1 digital signal into its 24 constituent VF channels.

3.2.5.4.1 System Description. Refer to figures 3-61 and 3-62 for functional block diagrams of the multiplex terminal in both transmit and receive modes.

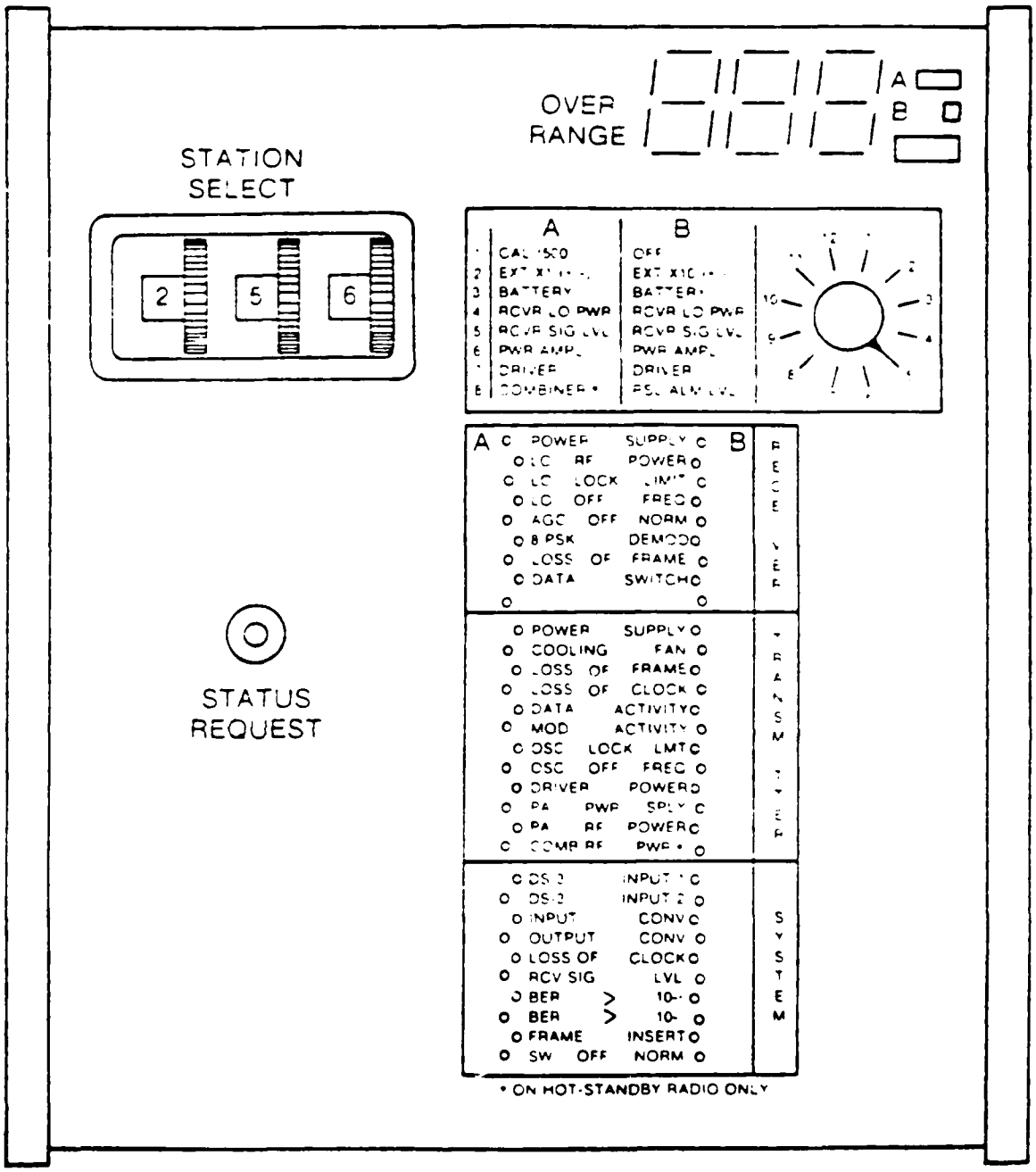

Figure 3-57. Master detail fault receiver.

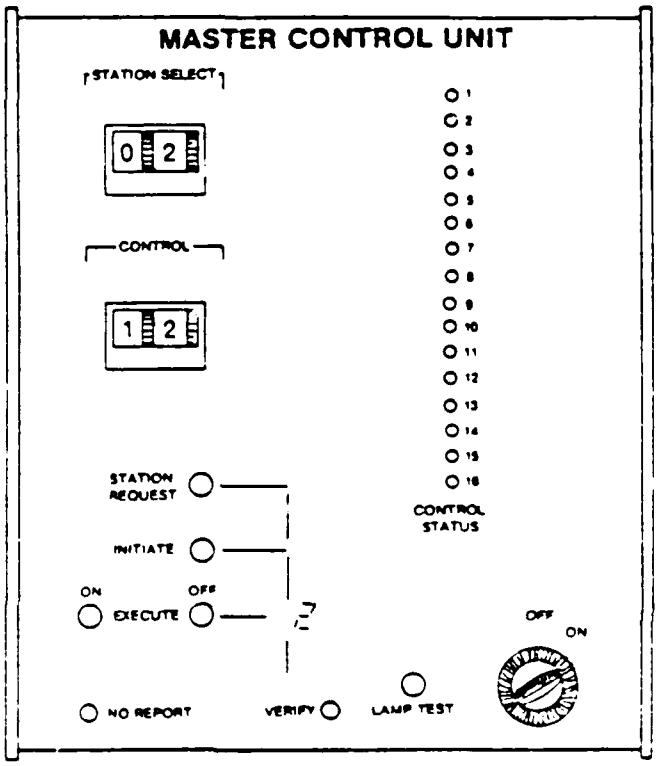

Figure 3-58. Master control unit.

AD-A139 738 DIGITAL MICROWAVE SYSTEM DESIGN GUIDE(U) RANGE COMMANDERS COUNCIL WHITE SANDS MISSILE RANGE NM TELE-COMMUNICATIONS GROUP FEB 84 RCC/TCG-207-84

UNCLASSIFIED F/G 9/5 NL

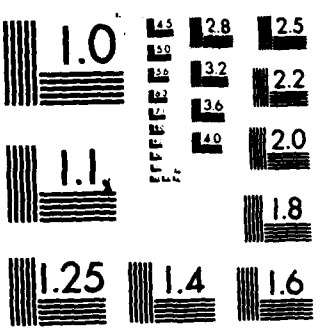

MICROCOPY RESOLUTION TEST CHART
NATIONAL BUREAU OF STANDARDS-1963-A

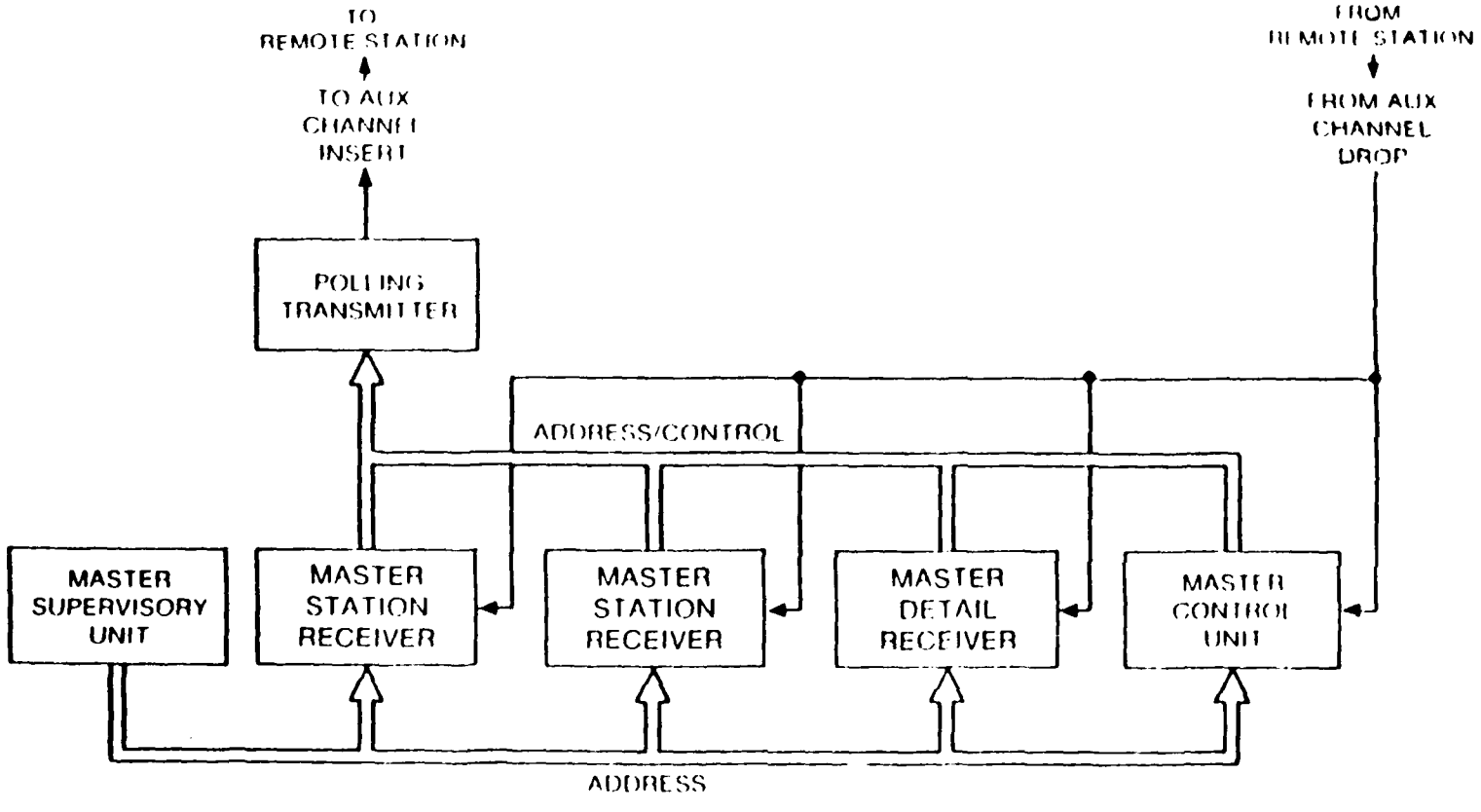

Figure 3-59. Expanded MCS-11 master station, showing detail alarm and remote control capabilities.

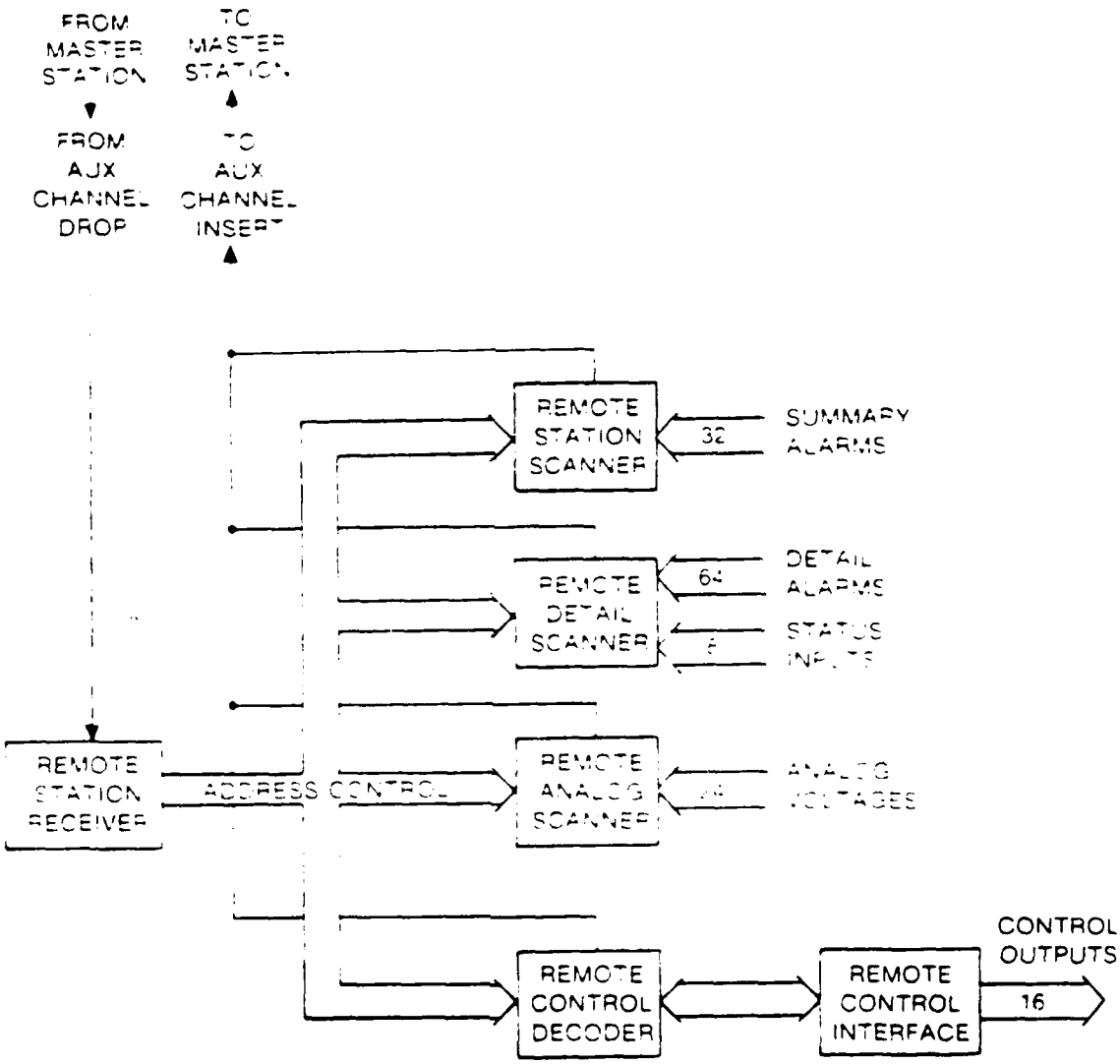

Figure 3-60. Expanded MCS-11 remote station.

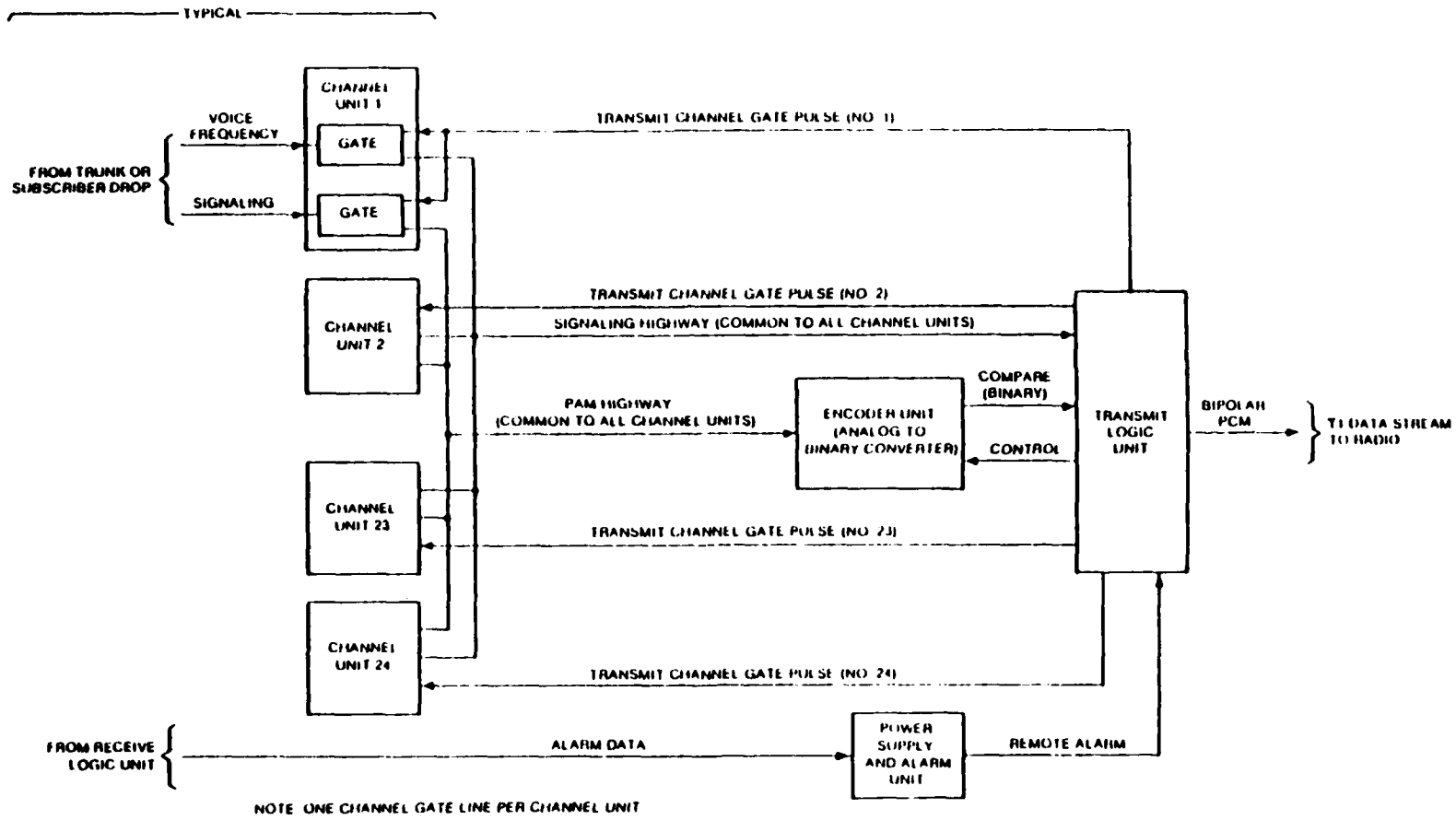

Figure 3-61. Multiplex terminal transmit functional block diagram.

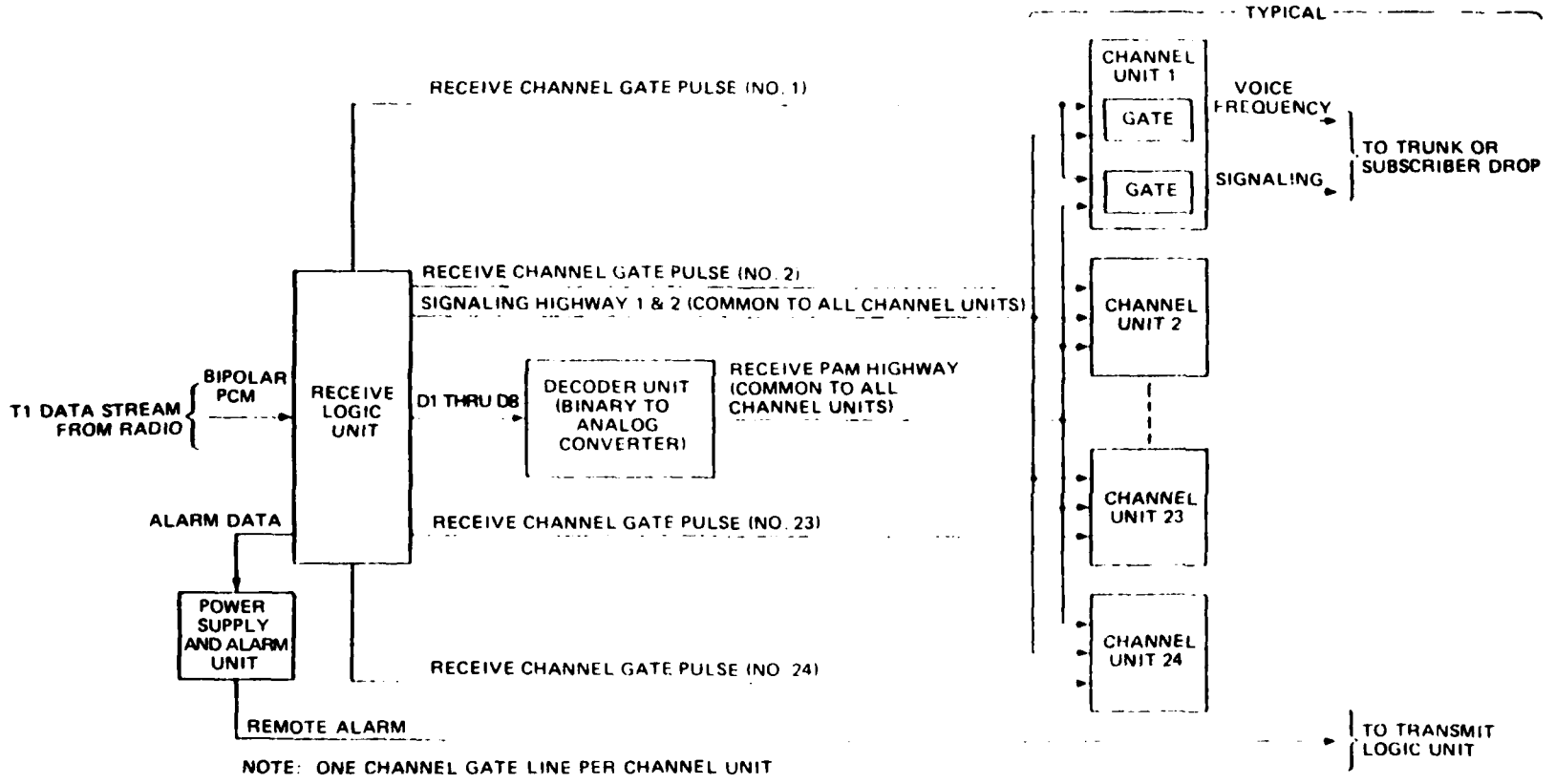

Figure 3-62. Multiplex terminal receive functional block diagram.

In the transmit direction, the common equipment in the multiplex terminal samples each of the 24 channel units at a rate of 8,000 times per second. The transmit channel gate pulse signal from the transmit logic unit gates a sample of the VF signal out of a channel unit. The VF sample is referred to as the pulse amplitude modulated (PAM) signal. The PAM highway provides a path for the PAM signal between the channel unit and the encoder unit. The encoder unit, under the control of the transmit logic unit, converts the analog PAM signal into the 7-bit binary code. The transmit logic unit first inserts the appropriate signaling information into the bit stream and then converts the binary signal to bipolar PCM by converting alternate pulses. It then feeds the PCM signal to the upper-level muldem low-speed interfacer.

In the receive direction, the receive logic unit processes the incoming bipolar PCM into the parallel binary format required by the decoder unit. The decoder unit converts the binary signal to a PAM pulse (analog) and outputs it on the receive PAM highway to the channel unit. The receive logic unit gates the receive PAM highway to the proper channel unit. The channel unit converts the PAM pulse back to a VF signal and outputs it to the trunk or subscriber drop.

Note the two general analog categories of equipment are common equipment and channel units. The analog VF signals are handled by the channel units. The common equipment controls the flow of data and codes and decodes the data between analog (VF) and binary.

3.2.5.4.2 Common Equipment. Common equipment in the T324 Trunk Carrier System consists of five units:

a. Encoder.

b. Decoder.

c. Receive Logic Unit.

d. Transmit Logic Unit.

e. Power Supply and Alarm Unit.

Figures 3-61 and 3-62 may be used for the following discussion.

This common equipment is divided into three major functions: transmit, receive, and power. The transmit function gates VF signals out of the channel units and codes them into bipolar PCM signals for transmission over a 1.544-Mb/s facility. The receive function decodes the bipolar PCM signal input from the 1.544-Mb/s facility into PAM signals and forwards them to the channel units. The power supply and alarm unit converts the -48-volt (or -24-volt) office supply into the four common equipment operating voltages, processes alarms, and provides certain test capabilities for the T324 Trunk Carrier System.

The transmit function is performed by the encoder and transmit logic units. The encoder unit provides analog voltage storage and comparator circuitry.

The transmit logic unit provides timing and all digital functions, including the generation of the bipolar PCM output to the span line termination equipment.

The receive function is performed by the receive logic and decoder units. The receive logic unit provides receive timing and converts the serial bipolar PCM to 8-bit parallel words. The decoder unit converts each 8-bit parallel word to an analog voltage and outputs it to the PAM highway. The PAM highway is gated into the channel units by the receive logic unit timing.

The power supply and alarm unit provides power supply, alarm, and test control circuitry. The supply is a dc-to-dc converter that provides the dc voltages to operate the common equipment and channel units. The alarm circuits monitor and display local and remote alarms. The alarm circuits generate the carrier group alarm (CGA) control function furnished to all channel units and to associated switching systems. The test control circuits provide control functions for looping, shifting, and testing a T324 Trunk Carrier System. The test control circuits also permit activation of the alarm cutoff (ACO) condition in both trunk and subscriber applications.

3.2.5.4.3 Channel Units. The T324 Trunk Carrier System will accommodate up to 24 VF channel units in any configuration desired. The trunk channel units used provide an interface between central office (CO) switching equipment and the common equipment units in the T324.

The T324 channel units are selected to occupy particular positions in the multiplex shelf, based upon the VF (two-wire or four-wire) and signaling requirements of the connecting trunks or subscriber circuits. Each of the trunk channel units consists of circuits for transmitting VF and signaling, circuits for receiving VF and signaling, and circuits that perform disconnect/make-busy (DMB) functions [except the four-wire transmission-only channel unit, which contains only VF and out-of-service (OS) circuits].

The transmit VF and signaling circuits accept outgoing voice and signaling information from the related trunk or subscriber loop. Samples of this information are gated to the common equipment units via the transmit PAM and signaling highway under control of transmit channel pulses from the transmit logic unit.

The receive VF and signaling circuits demultiplex message and signaling pulses appearing on the receive PAM and signaling highways from the common equipment units. The demultiplexing process is controlled by receive channel pulses from the receive logic unit, and the demultiplexed message and signaling pulses are converted to VF and signaling information for application to the associated trunk or subscriber loop.

The DMB circuits operate under control of CGA signals from the power supply and alarm unit. This feature is provided so circuits associated with a particular trunk will be made busy in the event of a carrier failure.

Two general types of channel units are specified:

a. Four-wire units.

b. Two-wire units.

The 4-wire channel units include the following five types of modules:

a. Four-wire transmission only (4WTO).

b. Four-wire E&M (4WE&M).

c. Four-wire Foreign Exchange Office (4FXO).

d. Four-wire Foreign Exchange Subscriber (4FXS).

e. Four-wire pulse link repeater (4WPLR).

The 4WTO channel unit provides a 600-ohm, 4-wire, 2-way VF message circuit. The unit is designed for use in exchange, extended area service (EAS), toll connecting, and intertoll trunk applications. No E&M signaling is provided with this channel unit.

The 4WE&M channel unit interfaces the T324 common equipment and the CO equipment to provide a 600-ohm, 2-way, 4-wire E&M message circuit. As with the 4WTO channel unit, the 4WE&M channel unit is designed for use in exchange, EAS, toll connecting, and intertoll trunk applications. This channel unit does, however, provide for E&M signaling.

The 4WFXO channel unit interfaces the T324 common equipment and the CO equipment to provide the office end of a ground start or loop start Foreign Exchange circuit.

The 2-wire channel cards include the following six types of units:

a. Two-wire E&M (2WE&M).

b. Dial pulse originating (DPO).

c. Dial pulse terminating (DPT).

d. Two-wire Foreign Exchange Office (2WFXO).

e. Two-wire Foreign Exchange Subscriber (2WFXS).

f. Two-wire E&M with 4-wire access (2W/4WACC).

The 2WE&M channel unit interfaces the T324 common equipment and CO equipment to provide a 600- or 900-ohm, 2-wire, 2-way E&M message circuit. The unit is designed for use in exchange, EAS, toll connecting, and intertoll trunk applications.

The DPO channel unit also interfaces the T324 common equipment and CO equipment to provide the originating end of a 1-way EAS, toll connecting, or intertoll trunk. This unit is used in conjunction with the DPT channel unit. The DPT channel unit simply provides the terminating end of a 1-way EAS, toll connecting, or intertoll trunk.

The 2WFXO channel unit interfaces the T324 common equipment and the CO equipment to provide the office end of a ground start or loop start Foreign Exchange circuit. The 2WFXO channel unit provides a 900-ohm, 2-wire message circuit.

The 2WFXS channel unit interfaces the T324 common equipment and the subscriber equipment to provide the subscriber end of a ground start or loop start Foreign Exchange circuit. The 2WFXS channel unit is used in conjunction with the 2WFXO unit described above.

The 2W/4WACC channel unit interfaces the T324 common equipment and the CO equipment to provide a 2-wire, 2-way E&M message circuit with a 600- or 900-ohm, 4-wire VF termination set.

3.2.6 Path and Site Planning. The first step in planning the system is to define operational requirements that the overall system is to satisfy. This initial step is dependent upon growth capabilities the system is to possess, as well as cost requirements involved in its procurement. Traffic studies should be performed and reliability requirements should be determined. These factors all play important roles in the final determination of basic equipment and site and route selection. System requirement studies and traffic studies are not discussed within this section. Information dealing with these topics is contained in other texts, listed in appendix B of this manual.

This section will provide a background in the various disciplines of transmission engineering necessary to design the system for optimal performance. Usable equations dealing with propagation and path analysis are presented in order to provide both an interesting introduction to the necessary transmission problem and a usable reference for future use. Other information on the topics discussed in this section may be found in the texts referenced in appendix B.

3.2.6.1 Site Selection. The preliminary site selection can usually be made from various map and/or aerial photographs of the terrain. Until the site survey is performed, however, the exact site selection will not be made. Maps typically prove to be the best source of information for initial system layout, while the aerial photographs prove to be of more use after the system has begun to take shape.

One excellent source of information is the aeronautical chart, which is published for most countries that use commercial and private air navigation. The U.S. Coast and Geodetic Survey publishes and distributes aeronautical charts of the United States, its territories and possessions. Charts of other areas are published by the U.S. Air Force Aeronautical Chart and Information Center (ACIC) and sold to civil users by the U.S. Coast and Geodetic Survey. A catalog of aeronautical charts is available from one of the following field offices, which will also supply the aeronautical charts desired on a specific order.

Chief, New York Field Office
U.S. Coast and Geodetic Survey
Room 1407 Federal Office Building
90 Church Street
New York, NY 10007

West Coast Field Director
U.S. Coast and Geodetic Survey
Room 121 Courthouse
555 Battery Street
San Francisco, CA 94111

Mid-Continent Field Director
U.S. Coast and Geodetic Survey
Room 1436 Federal Building
601 East 12th Street
Kansas City, MO 64106

The aeronautical charts typically show elevations in contours of 500 or 1,000 feet and are therefore not very useful in the actual plotting of the path profile. However, these charts do show airports, airways, major aerial obstructions, air navigation routes, and large topographical features such as lakes and mountain ranges. Also, they may be ordered with the flight chart overlay, which shows the established commercial airways.

By plotting the tentative transmission terminal locations on the aeronautical chart, an overall view of the route may be seen. Generalizations can also be made concerning features to be avoided. After an overview is gained of the desired route and site, the systems engineer can turn to more in-depth mapping tools for basic path and site selection. Among these are aerial photographs and the field survey itself. Aerial photographs are often very useful in rough terrain, because they show trees and other pertinent information in greater detail than can a topographical map.

Two types of site requirements exist in the design of a system: terminal sites and repeater sites. Terminal sites are usually fairly well defined, and the design of the path is a function of these locations. The terminal site may use an existing facility that is high enough and structurally sound enough to permit mounting of antennas on the building itself, thereby eliminating the need for adjacent towers at the terminal sites. Repeater sites may be of two types, depending upon the application of the system:

a. Repeater with drops and inserts.

b. Repeater with no drops or inserts.

The choice of intermediate repeater sites is greatly influenced by the nature of the terrain between sites. In preliminary planning it may be assumed that in relatively flat areas the path lengths will average between 25 and 35 miles for the frequency bands from 2 GHz through 8 GHz, with extremes in either direction depending upon terrain. In the 11-GHz and higher bands, the pattern of rainfall has a large bearing on path length.

The possibility of other forms of interference, internal or external to the system, must also be considered. Internal interference may take the form of overreach, junction, or adjacent section interference. External interference may take the form of radar interference, interference from nearby radio systems of similar frequency, or interference induced from unfiltered lower frequency radio systems.

Maintenance access is another important consideration. Maintenance costs are the highest operational cost incurred in a system. Therefore, a significant reduction in total life cycle cost may be realized by minimizing the overall

maintenance costs. If possible, access roads should be considered for equipment maintenance, both routine and otherwise. If site access by road is impossible, then the additional cost of airlift access must be considered.

In selecting a site for either a terminal or an intermediate repeater, a number of other factors must be considered. These considerations fall into the following categories:

a. A full description of each site must be given by geographical coordinates (longitude and latitude), access roads, and physical objects with which it can be identified. Geographical coordinates should be computed to the nearest second of latitude and longitude for the exact location recommended for the tower. These characteristics are pinpointed during the field survey phase, so final path profiles and system calculations may be performed.

b. Any unusual weather conditions to be expected in the area should be considered, including the amount of snow and ice accumulation, maximum expected wind velocity, and range of temperatures.

c. A description of the physical characteristics of the site should be prepared, indicating any required leveling, removal of rocks, trees, or other structures, etc.

d. The relationship of the site to any commercial, military, or private airport should be considered. It is very important to determine the relationship of the site to the orientation of runways where planes may be taking off or landing. This information is needed to determine problems that may induce potential obstructions to air traffic. Radar systems associated with air traffic control may also create interference problems if not properly taken into account.

e. The mean sea level elevation of the site should be determined at the recommended tower location, together with the effect that site leveling will have on that elevation.

f. If possible, a full description or recommendation should be prepared for an access road from the nearest improved road to the proposed building location.

g. Commercial power sources should be considered. It may be advantageous to relocate a particular site near a commercial power source rather than near an access road, for instance. Diesel engine/generator sets may not be cost-effective when considering the initial cost and the routine maintenance involved.

h. Any other factors that may be relevant in site planning should be recorded for future use. Factors that may not seem important initially may become significant as various tradeoffs are analyzed.

3.3 System Operational Reliability. Hardware for a digital microwave communications system should be designed and configured using redundant, dependable circuitry to provide high quality, reliable operation with minimum traffic interruption. Once a failure has occurred, modular construction of the system

components permits rapid fault isolation and repair. The ease with which the equipment can be maintained in an operational status and the length of time between failures are factors that determine the kind of support that must be provided to ensure optimum equipment operation. This support includes the necessary tools, test equipment, and spare modules, as well as adequate maintenance facilities and trained personnel.

The use of built-in test equipment (BITE) and fault indicators minimizes the need for additional test equipment. In many cases, the malfunctioning module or assembly can be detected using BITE and fault indicators. Once the defective module is replaced, the support test equipment is required to align or adjust the system components to ensure optimum operation. By using plug-in modules and screw-down assemblies, the units may be replaced with a minimum number of common tools. The defective module or assembly is shipped to the factory for repair, necessitating a logistics system and a local supply of spare assemblies.

3.3.1 Performance Standard. Quality, as a degree of excellence, may be described by many different terms: superb, bad, sufficient, and marginal. Comparison of any two of these words would indicate a degree of quality, but comparison would only reflect a relative meaning with no measurable value. Statements of quality are only meaningful when we express them in terms of specific quantitative characteristics. In microwave systems, such characteristics are performance and reliability. Performance information is typically published in technical data sheets, but reliability information, as measured by failure rate predictions, is not always published by all equipment manufacturers.

Predictions are ultimately based upon the individual component failure rates, expressed in failures or fractions of a failure per million hours. Failure rates are tabulated for various environmental and operational conditions, which vary for all types of equipment applications Equipment mean time between failure (MTBF) is an important element in determining the worth of a microwave system. A properly designed microwave system is not necessarily the one that provides the required performance with the lowest initial purchase price. It is the system that provides the required performance with the lowest total lifetime system price (including both equipment and operation). The following paragraphs provide an introduction to the theory, practice, and application of microwave equipment reliability predictions.

At the outset of a system conception, system reliability must be discussed and defined in terms of the required installed system performance. Four essential system parameters describe the installed system performance and, together, define the system standard. These parameters are illustrated in figure 3-63.

3.3.1.1 System Design. The factors which must be considered by the system designer in providing the optimal system for the application have already been discussed. The installed equipment performance can only be as good as the weakest component in the system. The system configuration is one such link. The module design is on the same hierarchy chain as the system design, and the overall system performance is dependent upon both.

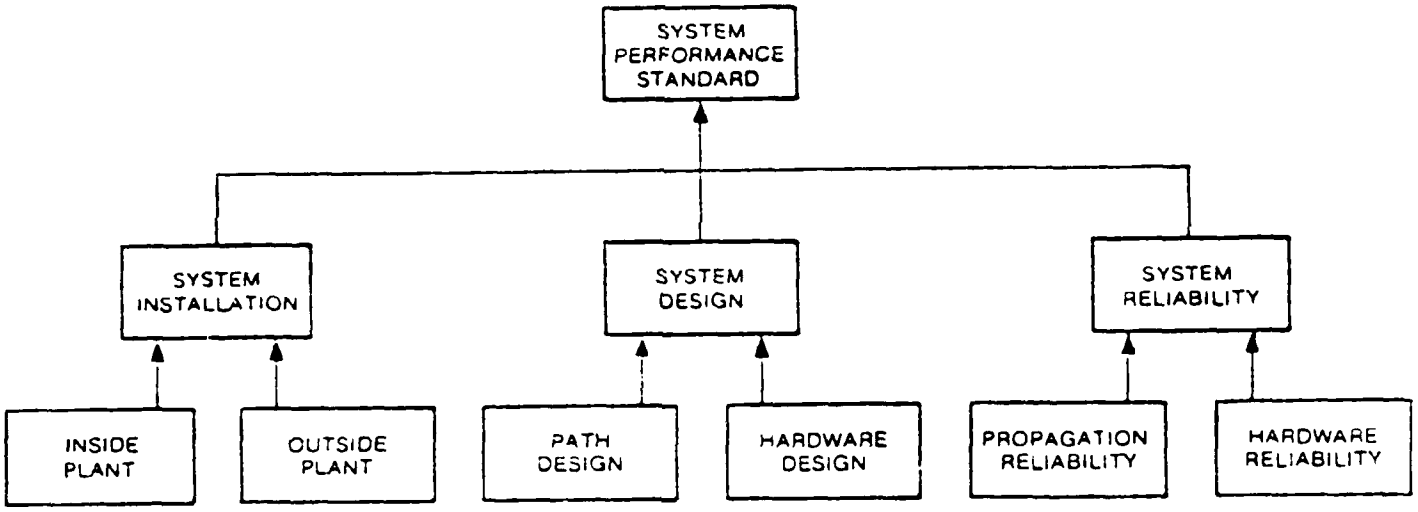

Figure 3-63. System performance standard.

3.3.1.2 System Installation. A poorly designed system will inherently yield poor performance. In the same way, the system performance will only be as good as the installation. Incorrectly matched waveguide will yield intrasystem interference in the same manner that configuring the path incorrectly may create interference. Therefore, the system installation is just as important as the other three factors illustrated in figure 3-63.

3.3.1.3 System Propagation Reliability. Just as the system design and installation affect the performance criteria of the total system, propagation reliability also plays an important role. This topic, discussed in section 5.2.1, equates percentages of outage time of the communications circuits to the parameters associated with the path in question.

3.3.1.4 System Hardware Reliability. System hardware must provide the hardware reliability specified by the customer. Equipment reliability is defined in either of the following terms:

a. Availability of the system to transmit and receive information between two end users, i. percent of time.

b. Equipment MTBF.

Hardware reliability is predictable and measurable. Estimation of hardware reliability involves the following steps:

a. A block diagram model of the proposed system is prepared, including all equipment that could cause a system failure and indicating redundancy.

b. Equipment failure rates are calculated for equipment ambient temperature plus internal heat rise, using component failure rate data.

c. Actual equipment failure rates are obtained from life cycle tests and field data collected on the basis of warranty, service, and spare parts orders.

d. Mean time to restore (MTR) information should be derived based on the following data:

(1) Mean time to repair/replace (MTTR) failed module.

(2) Travel time required for maintenance personnel to reach the site of failure.

(3) Probability of having a spare module of the failed type on hand.

(4) Time required to obtain a spare from another site or an outside source when no spare is on hand.

In summary, while the science of statistics may seem to defy precise definition of reliability in terms of commonly used system techniques, a microwave communication system cannot be adequately designed to a given performance goal without

an explicit knowledge of the required reliability. This design process defines the means of measuring the installed system.

The purpose of the discussion of equipment reliability is threefold in nature. First, the fundamental definitions, equations, and mathematical laws applicable to reliability predictions and evaluations of microwave systems will be discussed. Evaluations must include consideration of both hardware and propagation outages. The effects of maintenance and sparing practices upon operating system reliability will be examined, and the basic elements necessary to ensure reliability in design and production will be defined. Secondly, typical configurations of microwave radios will be covered. Predicted MTBFs for various system configurations will show a comparison between analog and digital systems. Finally, the comparative worth of reliability in microwave systems will be discussed. Without attempting to list all of the aspects of a full-scale, life-cycle cost analysis, a simple and straightforward method for performing preliminary analyses of the worth of higher reliability equipment in any type of system will be presented.

3.3.1.4.1 Definitions of Equipment Reliability Parameters. The following paragraphs provide definitions of terms useful in understanding and calculating various parameters associated with hardware reliability.

MTBF is defined as the mean value of time between successive failures of a system or component of the system. This is the ratio of operating time for a population of a given equipment type divided by total failures in the same period. For single units it is also the reciprocal of the failure rate, . Therefore, the larger the value of the MTBF, the greater the reliability. MTBF is given by

$$\text{MTBF} = \frac{\text{Hours of Operation}}{\text{Failures}} = \frac{1}{\lambda}$$

where

λ = the failure rate of the equipment in failures/hour.

Failure rate (λ) is often given in failures/hour. This parameter is defined as the number of failures divided by the operating time interval in question. Failure rate is given by

$$\lambda = \frac{a}{b} = \frac{1}{\text{MTBF}}$$

where

a = number of failures, and

b = duration of operation (hours).

Reliability (R) is the probability that no failure will occur on the system during a certain period of time. Reliability is given as a function of time:

$$R(t) = e^{-\lambda t}$$

where

e = natural logarithm base (2.71828)

λ = failure rate (failures/hour)

t = operating time (hours)

Mean time to repair (MTTR) is the average time required to repair a fault. This includes fault isolation time, repair time, and test time, but excludes administrative time. Travel time (TT) is the travel time to the site of failure, normally expressed in hours. The probability of having a spare on hand (PS) is self-explanatory. The time required to procure a spare (TR) is the time necessary to obtain a missing spare, expressed in hours. These parameters can be used to determine the mean time to restore (MTR), which is the average time required to restore system service by the quickest means, such as module replacement. The time required to replace defective components within a defective module is not included in MTR. The equation that gives MTR is

$$MTR = MTTR + TT + (1-PS)\ TR$$

where MTTR, TT, PS, and TR are as defined above.

Availability (A) is expressed as the possibility that a device or system will be operable at any given point in time. Availability is also defined as the ratio of "up time" to total time. A is given by equation

$$A = \frac{\text{up time}}{\text{up time + down time}} = \frac{MTBF}{MTBF + MTR} = \frac{1}{1 + \lambda\ MTR}$$

Unavailability (U) is the complement of availability. U is expressed by

$$U = (1 - A) = \frac{\text{down time}}{\text{down time + up time}}$$

Outage (O) in hours is merely the product of U and hours in one year, or

$$O = Ut$$

where

t = 8760 hours/year.

3.3.1.4.2 Fundamentals of Hardware Reliability Predictions. Predictions of failure within electronic devices and systems are based primarily on statistical

information. With the notable exception of electromechanical and mechanical devices, most components exhibit an exponential failure density function; that is, the reliability of the device decays exponentially with time. It is known, however, that electronic equipment may contain parts subject to early defects, or "infant-mortality" failures. It is also known that the rate of failures increases as the device nears the end of its life. During the useful life of the equipment, however, the rate of failures tends to remain constant. These tendencies are illustrated in the familiar "bathtub" curve in figure 3-64, where failure rate is plotted against time.

The rate of failures tends to decrease after the burn-in or debugging period takes place. The length of this period is predominantly dependent upon the complexity and type of parts employed in the unit. Useful lifetimes of electronic devices are quite long (from 10 to 30 years). As the individual parts begin to reach the ends of their useful lifetimes, the rate of failures in the equipment begins to rise. When piece parts are replaced before the end of their useful life, however, the constant failure rate portion of this curve may be extended indefinitely. As seen in figure 3-64, the reliability of a component during its useful life is expressed in exponential form:

$$R(t) = e^{-\cdot t}$$

where

$\cdot$ = failure rate,

e = a constant, and

t = time.

Since reliability is a probability function, the basic laws of probability may be employed to determine the probability that the system will perform within specifications. For example, the reliability function for a series system is the product of the availability (A) functions for each part within the system. This concept is illustrated by figure 3-65. Availability for a series of non-redundant system blocks is the product of each block's availability, as expressed by

$$A_S = A_1 \times A_2 \times \ldots \times A_n = \prod_{i=1}^{n} Ai$$

The failure rate for a series of system blocks is the sum of each block's failure rate:

$$\lambda_S = \lambda_1 + \lambda_2 + \ldots + \lambda_n = \sum_{i=1}^{n} \lambda i$$

- FAILURE RATE PROFILE

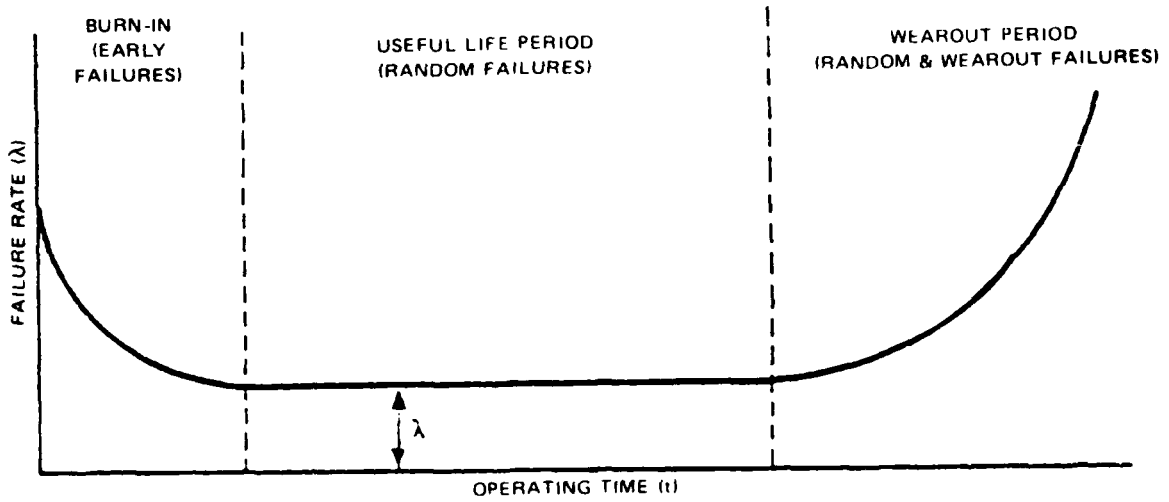

- RELIABILITY (USEFUL LIFE PERIOD)

$$R(t) = e^{-\lambda t}$$

Figure 3-64. Failure rate versus operating time.

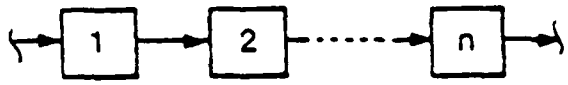

Figure 3-65. Calculation of reliability for a series system configuration.

Therefore, the reliability of the total system is

$$R_s\ (t) = e^{-\lambda_S t}$$

Availability of a parallel network of system blocks is calculated by

$$A_p = 1 - \left[U_1 \times U_2 \times \ldots \times U_n\right] = 1 - \left[\prod_{i=1}^{n} Ui\right]$$

where U = unavailability of the block = 1 - A.

Given MTR, the · for the system can then be found by

$$\cdot_p = \frac{1 - A_p}{A_p\ MTR}$$

Therefore, the reliability of the parallel network is $R_p(t) = e^{-\cdot_p t}$.

A simple parallel (redundant) configuration is illustrated in figure 3-66. This configuration requires at least one functioning unit to be available. This system availability is equal to 1 minus the arithmetic product of all the unavailabilities.

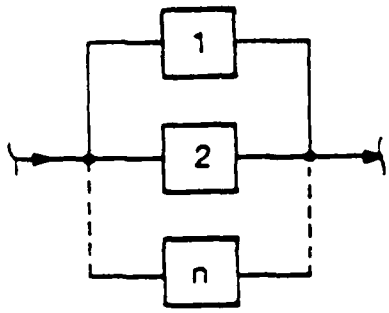

Figure 3-66. Calculation of reliability for a parallel (redundant) system.

A more complex configuration is shown in figure 3-67. This system includes a number of series and parallel configurations, which are connected in different ways. For example, a number of subsystems with redundancy, i.e., parallel configurations, can be connected in series, or, on the other hand, a number of series structures can be connected to form a parallel combination. In this way, parallel-series and series-parallel connections are obtained, for which one can derive single formulas for reliability calculations. However, the same result may be obtained through a systematic reduction procedure. This method entails grouping the units into suitable reliability blocks, which are then combined in accordance with simple rules for series and parallel configurations. This procedure is illustrated by figure 3-67 and expressed by

$$A \text{ system} = A_I \times A_{II} \times A_{III}$$

and

$$A \text{ system} = \frac{1}{1 + \lambda_{sys} \, MTR_{sys}}$$

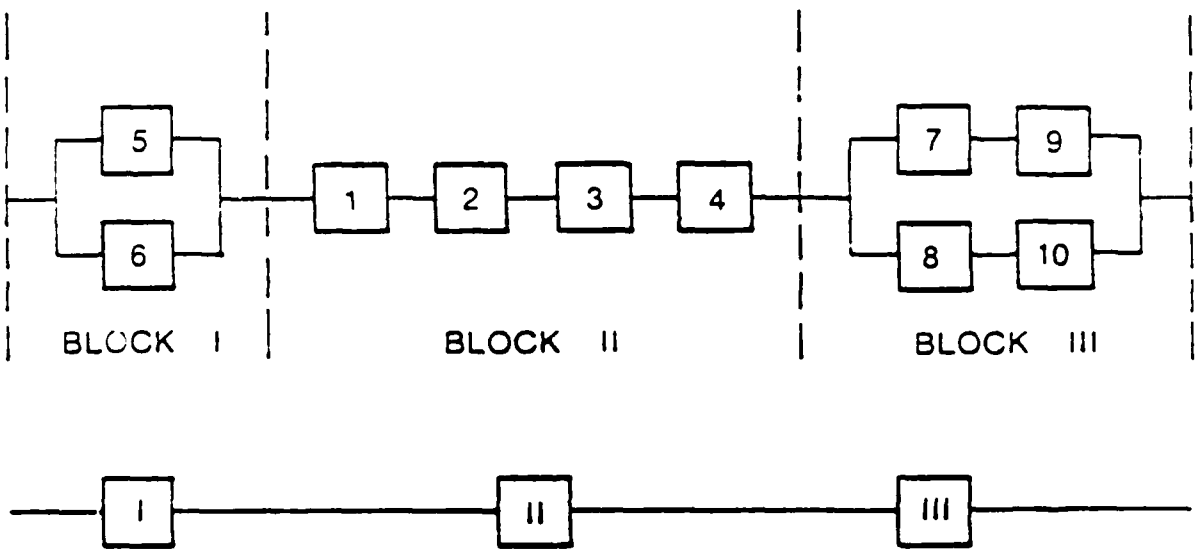

Figure 3-67. Reliability calculations for a mixed (series-parallel) network.

Therefore,

$$\lambda \text{ system} = \frac{1 - A_{sys}}{A_{sys} \, MTR_{sys}}$$

An important point should be made concerning the block diagrams used in figures 3-65 through 3-67. These are called reliability block diagrams and are used to indicate how the parts of a unit or system are connected, from a reliability point of view, for one or several given operational modes. A reliability block diagram is not the same as an electrical block diagram, but rather is a technique used by the reliability engineer only. The correct reliability block diagram is not always easily determined. A good knowledge of the system, as well as the individual modules and components, is necessary to accurately derive it.

3.3.1.5 Reliability Summary. In summary, a few important points should be made concerning system reliability and, specifically, the hardware reliability element. Two reliability elements must be considered when determining the overall system reliability: propagation reliability and hardware reliability. Both elements play equal roles in the determination of system reliability from a user's viewpoint.

In general, reliability is defined as the probability that a system will operate as intended during a certain period of time. It is normally presented in the same way as probability, that is, either in decimal form or as a percentage. Therefore, a reliability of 0.85, or 85 percent, for a period of 1 year, obtained for a transmission system, means the chance is 85:100 that the equipment will operate without failure for 1 year. This reliability figure is a function of the failure rate (λ) and the time (t). The failure rate (λ) is typically defined for three periods throughout the equipment lifetime: the early or infant failure period, the constant failure rate period, and the wear-out failure rate period. These three periods were illustrated in figure 3-64.

The MTBF is simply one method of describing the behavior of a repairable system or unit. This figure, usually stated in hours, designates the mean value of the times between successive failures and is usually expressed as the reciprocal of the failure rate, or $1/\lambda$. The availability, on the other hand, is the most important parameter from the user's viewpoint. This figure is described as the probability that a system is in operation when it is needed. The usefulness of the terms described in this section is illustrated in the following section, which covers the determination of adequate spare module quantities.

3.3.2. Spares Requirements. Spare parts are an essential element in any logistics support process. This element must be properly planned and integrated with all other elements (publications, test and support equipment, personnel training, facilities, etc) to ensure optimal performance of the support program and thereby achieve a viable system.

The spare parts process, often called "provisioning," is not a new concept. Provisioning has been employed for hundreds of years by various means. In the early days, individuals were primarily concerned with determining the items (food, fuel, clothing, etc) to meet their basic needs, whereas in today's highly technical environment we encounter more complex situations.

When procurement of a new item of equipment takes place, prior to its development a decision must be made about the spare parts required to support and maintain the new equipment. Incorrect decisions, poor estimates of service life, and improper selection levels can result in inadequate spares and lead to inoperative equipment.

On the other hand, poor decisions can result in excessive support, reflecting needless expenditure of funds for unnecessary spares, warehousing, and disposal.

3.3.2.1 Spares Theory. The requirement for spares is a direct result of corrective and preventive maintenance actions. To ensure that the necessary spares are available to fulfill these needs, it is important that the selected spares support the maintenance levels established by the maintenance plan and be located at the appropriate maintenance area. The following paragraphs provide the information on which the spares allocation is based.

To determine the optimal set of spare parts to fulfill the system requirements, it becomes necessary to predict the number of expected failures during the spares provisioning (stockage) period. It has been determined, through considerable testing and experience from field failure data, that electronic equipment and part failures occur at random intervals and reflect a relatively constant failure rate during their useful lives. The typical failure rate profile, better known as the "bathtub" curve, is illustrated in figure 3-64. Since the anticipated failures occur at random intervals and the expected number of failures is the same for equally long operating periods, the reliability is defined by the familiar exponential formula:

$$R(t) = e^{-\lambda t}$$

where

e = natural logarithm base (2.71828),

λ = failure rate, and

t = operating time.

Spare provisioning normally deals with the spares requirements during the useful life period. Special considerations and adjustments must be made when the equipment is deployed prior to its burn-in or when it enters the wear-out period.

Assuming the exponential density function as a model, Poisson distribution can be utilized to determine the probability of having a specified number of failures during a given period of time. The Poisson distribution includes a number of terms, and each represents the probability of 0, 1, 2, 3, or more failures for the period under consideration. The formula used to calculate these probabilities, discussed in the following paragraphs, considers a constant failure rate.

It is desirable to have a certain level of assurance of having the necessary spare parts available when replacements are needed; therefore, it becomes necessary to determine the required individual probability levels to provide the desired overall probability. In the equation below, the probability calculated for P(X) represents the probability for an individual item:

$$P(X) = \sum_{r=0}^{x} \frac{(q\lambda t)^r}{r!} e^{-q\lambda t}$$

where

$P(X)$ = probability of having X or less failures in time t,

r = range of X,

x = number of spares required to achieve the required $P(X)$ value,

$\cdot$ = failure rate of individual device,

t = total mission hours, and

q = total quantity (individual device).

Since the individual spare parts that make up a spares inventory are independent items, the Multiplication Theorem can be used to determine the individual probability which must be provided by each item to achieve the desired overall spares probability. The Multiplication Theorem states: "When the probabilities of independent events are known, the probability that all of the independent events will occur is the product of the individual events." This probability is illustrated by the following equation and considers the probability level of each independent event being equal.

$$OC = (IC)^N$$

where

OC = overall confidence level,

IC = individual confidence level, and

N = number of line items.

For example, what would be the required individual confidence level to achieve a 95-percent overall confidence level when there are 10 different items? The required individual confidence is 99.49 percent, as expressed by the equation below and illustrated in figure 3-68.

$$OC = (IC)^N$$

$$IC = (OC)^{1/N}$$

$$= (0.95)^{1/10}$$

$$= 0.994884$$

3.3.2.2 Operational Suppor' 'oncept. Determining the appropriate spares inventory to properly support a communications system requires certain basic support considerations. Two major categories that must be considered in the initial spares planning phase include the system/equipment operational aspect and the

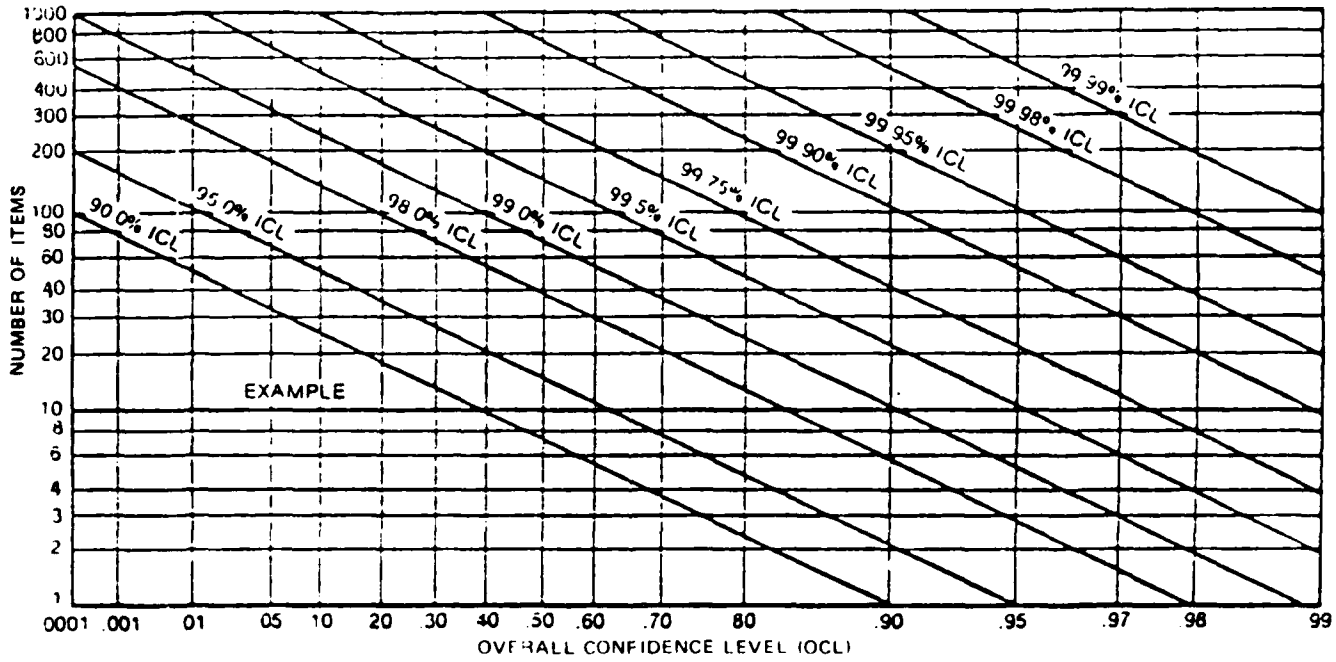

Figure 3-68. Individual confidence level calculation chart.

maintenance approach. The basic system/equipment operational and maintenance considerations include the planned deployment of equipment by geographical location, maintenance levels, equipment redundancy and criticality to mission success, and operational environment. Maintenance levels are often placed in three general categories (organizational, intermediate, and depot); however, the categories may vary among programs. These maintenance levels are sometimes categorized as levels 1, 2, and 3, respectively. Each of these maintenance levels is discussed in section 3.3.3.3.

To ensure the correct level of spares is properly positioned for each maintenance level, the selected spares must be compatible with the specific maintenance baseline established for the program. The maintenance levels established will define the level of maintenance to be performed at each echelon, thereby eliminating any doubt about the level of spares required for each maintenance level. This is an important aspect in the spares selection process, since all support elements evolve around the same maintenance approach and must be compatible to be effective. The following are some other individual spares parameters that must be considered in determining the correct level of spares:

a. Provisioning period.

b. Equipment operating hours.

c. Maintenance level.

d. Operating environment type (fixed ground, airborne, shipboard, etc).

e. Repair turnaround time.

f. Required spares probability level.

g. Special considerations (budget constraints, custom impacts, etc).

3.3.2.3 Spares Computation. One of the final phases of the spare parts provisioning process is the determination of the required spares quantities to meet the demands of both preventive and corrective maintenance actions. The three phases of the provisioning process establish the LEVEL of spares required, WHERE the spares should be stocked, and also the required QUANTITY to satisfy the particular demands for spare parts during a given time period.

As noted previously, the Poisson distribution can be used to predict the probability of a certain number of failures in a given period of time. This statistical prediction method becomes a very useful means in the determination of spare parts requirements. Poisson distribution consists of a number of terms, each of which gives the probability of 0, 1, 2, 3, or more failures during an increment of time. To illustrate the distribution, the Poisson distribution formula can be explained as follows:

$$P(X) = \frac{(q\lambda t)^0}{0!} e^{-q\lambda t} + \frac{(q\lambda t)^1}{1!} e^{-q\lambda t} + \frac{(q\lambda t)^2}{2!} e^{-q\lambda t}$$

$$+ \frac{(q\lambda t)^3}{3!} e^{-q\lambda t} + \ldots + \frac{(q\lambda t)^n}{n!} e^{-q\lambda t}$$

where

$\frac{(q\lambda t)^0}{0!} e^{-q\lambda t}$ = probability of 0 failure in time t and is equivalent to the probability of survival,

$\frac{(q\lambda t)^1}{1!} e^{-q\lambda t}$ = probability of 1 failure in time t,

$\frac{(q\lambda t)^2}{2!} e^{-q\lambda t}$ = probability of 2 failures in time t,

$\frac{(q\lambda t)^3}{3!} e^{-q\lambda t}$ = probability of 3 failures in time t, and

$\frac{(q\lambda t)^n}{n!} e^{-q\lambda t}$ = probability of n failures in time t.

In the following paragraphs, a sample spares equipment calculation will be presented. The sample spares calculation considers a consumable type item with the following support parameters:

a. Provisioning period: 1 year.

b. Total quantity: 10.

c. Equipment operation: 4,000 hours/year.

d. Failure rate: 1.000 percent/1,000 hours.

e. Overall confidence level: 0.90.

NOTE

The required individual confidence level must be calculated. Assume the spares complement being considered in this example consists of 110 different items; therefore, the required individual confidence level must be 0.999 as illustrated below:

$$IC = (OC)^{1/N}$$

$$= (0.90)^{1/110}$$

$$= 0.9990426$$

In the above example, how many of this particular item should be procured as spares to ensure the required spares probability level is obtained? To determine the required quantity, the Poisson equation must be expanded until the probability of having X or less failures is greater than or equal to the required individual probability level. As illustrated in table 3-6, three spares would be necessary to achieve the required spares probability level.

There is one caution to heed when calculating the spares for repairable systems. When the reliability of a repairable item is such that its probability of surviving the repair cycle without a failure is greater than or equal to the required spares probability, another calculation must be made in regard to the provisioning period. Providing the probability of the item surviving the provisioning period without a failure is also greater than or equal to the required spares probability, the required number of spares would be 0. If the probability of surviving the provisioning period is less than the required spares probability, a quantity of one spare would be required. The check with the provisioning period is not necessary for repairable items when the probability of having one or more failures during the repair cycle is less than or equal to the required spares probability.

The calculation of spares requirements for a particular system is not normally within the scope of a systems engineer's task. They have been provided within this subsection to give the system designer a general understanding of the mechanics of spares provisioning requirements.

3.3.3 Maintenance Fundamentals. Maintenance and sparing practices affect the operational reliability of a microwave system. The practice of repairing or replacing defective units immediately upon receipt of an alarm on a continuous basis is often called an "alarm-and-renewal" policy. It is also known as "continuously manned" or "round-the-clock maintenance." By contrast, the practice of inspection and renewal requires only that the system be periodically inspected to detect failures and effect repairs. This practice is also sometimes referred to as "unmanned maintenance." Both maintenance practices are commonly in effect within an operational system. It is convenient, therefore, to define a "split-maintenance period" as that smallest repetitive period

TABLE 3-6

SAMPLE SPARES CALCULATION

Expected number failures (F) = (q) (λ) (t)

where

q = total quantity

λ = failure rate

t = operating hours (provisioning period)

F = (q) (λ) (t)

= (10) (0.00001) (4,000)

= 0.4

$$P(X) = \sum_{r=0}^{3} \frac{(q \cdot t)^r}{r!} e^{-q \cdot t}$$

$$P(X) = \frac{(0.4)^0}{0!} e^{-0.4} + \frac{(0.4)^1}{1!} e^{-0.4} + \frac{(0.4)^2}{2!} e^{-0.4} + \frac{(0.4)^3}{3!} e^{-0.4}$$

= (1) (0.67032) + (0.4)(0.67032) + (0.08)(0.67032)
+ (0.0106667)(0.67032)

= 0.67032 + 0.268128 + 0.0536256 + 0.0071501

P(X) = 0.9992237

In summary, the calculations above provide the following probabilities:

a. There would be a 67.032-percent probability of no failures during the 1-year period.

b. There would be a 93.84-percent probability of 1 or less failures during the 1-year period.

c. There would be a 99.21-percent probability of 2 or less failures during the 1-year period.

d. There would be a 99.92-percent probability of 3 or less failures during the 1-year period.

in which both alarm-and-renewal and inspection-and-renewal cycles are mixed, such as manning on an 8 to 5, 5-day-per-week basis.

3.3.3.1 General Relationships. Within this subsection, MTTR, MTTF, and MTBF are related to the maintenance considerations of the system. The relationships of MTTR, MTBF and MTTF are as follows:

$$MTBF = MTTF + MTTR$$

This implies the MTTF is the mean value for the period between the completion of a repair and the occurrence of the next failure. Therefore, with a negligible MTTR (i.e., MTTR ≈ 0), MTBF will equal MTTF. These relationships are graphically illustrated by figure 3-69.

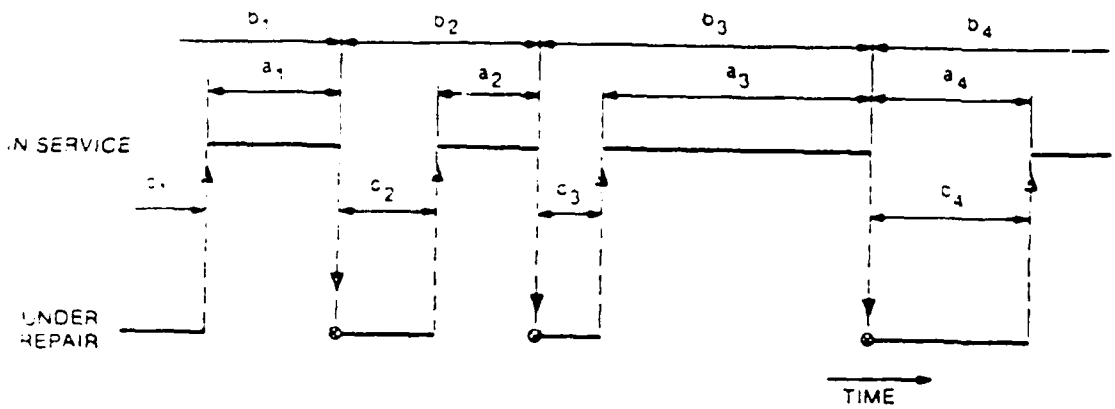

⊗ INSTANTS WHEN FAILURES OCCUR

$a_1, a_2, \ldots$ TIME INTERVALS OF (USEFUL) OPERATION

$b_1, b_2, \ldots$ TIME INTERVALS BETWEEN THE OCCURRENCE OF FAILURES

$c_1, c_2, \ldots$ REPAIR TIME

MTTF = MEAN VALUE OF THE TIME INTERVALS $a_i = \frac{\sum a_i}{i} = \frac{\sum (b_i - c_i)}{i}$

MTBF = MEAN VALUE OF THE TIME INTERVALS $b_i = \frac{\sum b_i}{i}$

MTTR = MEAN VALUE OF THE TIME INTERVALS $c_i = \frac{\sum c_i}{i}$

$b_i = a_i + c_i$ or MTBF = MTTF + MTTR

Figure 3-69. Relationships of MTBF, MTTR, and MTTF.

For operational transmission equipment, the time intervals a_i and b_i are in the order of months or years, whereas c_i is usually no greater than a few hours. Consequently, $b_i \approx a_i >> c_i$. In other words, MTBF will usually give the approximate mean value for the time that the system is in working order between repairs. Naturally, the system includes a number of reliability blocks and, therefore, requires more analysis from a maintenance standpoint. Figures 3-70 and 3-71 illustrate the MTBF/MTTR profiles for both a series block and a redundant block diagram.

Figure 3-70, the life profile of a typical series unit, illustrates that after each operating period (MTBF) there is an attendant down-time period (MTTR). As noted previously, these periods tend to remain constant in length throughout the useful life of the unit. By collecting the up-time periods (MTBFs) and down-time periods (MTTRs), an equivalent availability profile may be drawn for this series unit. Within the period shown, the availability may be measured as the ratio of up time to up time plus down time. This is the most important parameter to be considered in developing the maintenance concept.

In the redundant configuration life profile, illustrated by figure 3-71, each of the units exhibits its own unique life profile. Since only one of the units must operate for the element to be good, the element up time continues until both units are in a failed condition at the same time. Element down time is then the time required to restore at least one unit to an operating condition. It can be seen from this illustration that the equivalent availability profile of the redundant element closely parallels that of a series unit. Within the period of concern, availability may be measured as the total element up time divided by total element up time plus element down time.

Well-planned maintenance and sparing practices in an operational system drastically improve the life and availability profiles of the redundant system, as shown in figure 3-72. For example, assume that an element begins operation with the number of initial spares (NIS), as computed previously. If the spares stock is not replenished after each spare is used, the element availability continues at a constant rate until the last spare is consumed and one additional failure occurs. Element down time now consists of the turnaround time required to obtain a good spare, plus the time to restore the element to service using this spare. If, on the other hand, the system is operated with a fixed sparing confidence level, the term (NIS + 1) is replaced by the complement (1 - PS) of the probability of having a good spare. For example, if PS equals 90 percent, we would expect to run out of good spares every tenth failure. The period in which availability for the element is measured must now be extended to include this turnaround time factor. Up time is still equal to the element MTBF; down time, however, consists of MTTR plus the product of the turnaround time and the probability of not having a good spare on hand.

3.3.3.2 Maintenance Concepts. The following paragraphs discuss the features of a well-planned maintenance program.

3.3.3.2.1 Routine Maintenance. Routine checks of all alignment procedures of the microwave radio are not recommended. The built-in measurement and alarm

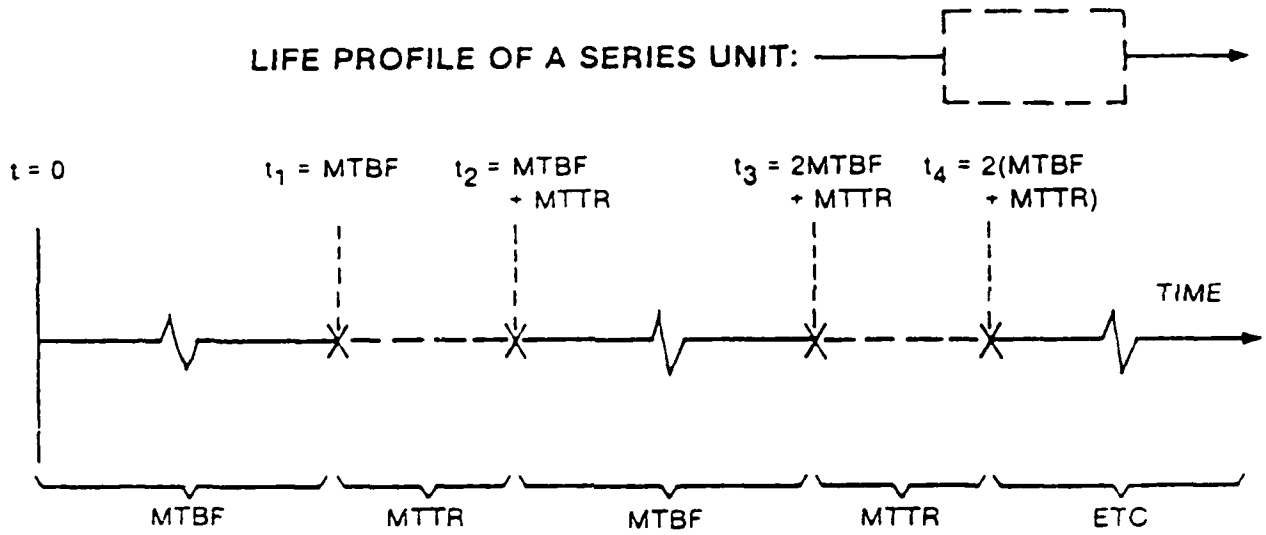

$$A = \text{AVAILABILITY} = \frac{(\text{TOTAL UPTIME})}{(\text{TOTAL UPTIME}) + (\text{TOTAL DOWN TIME})}$$

Figure 3-70. Series unit MTBF-MTTR profiles.

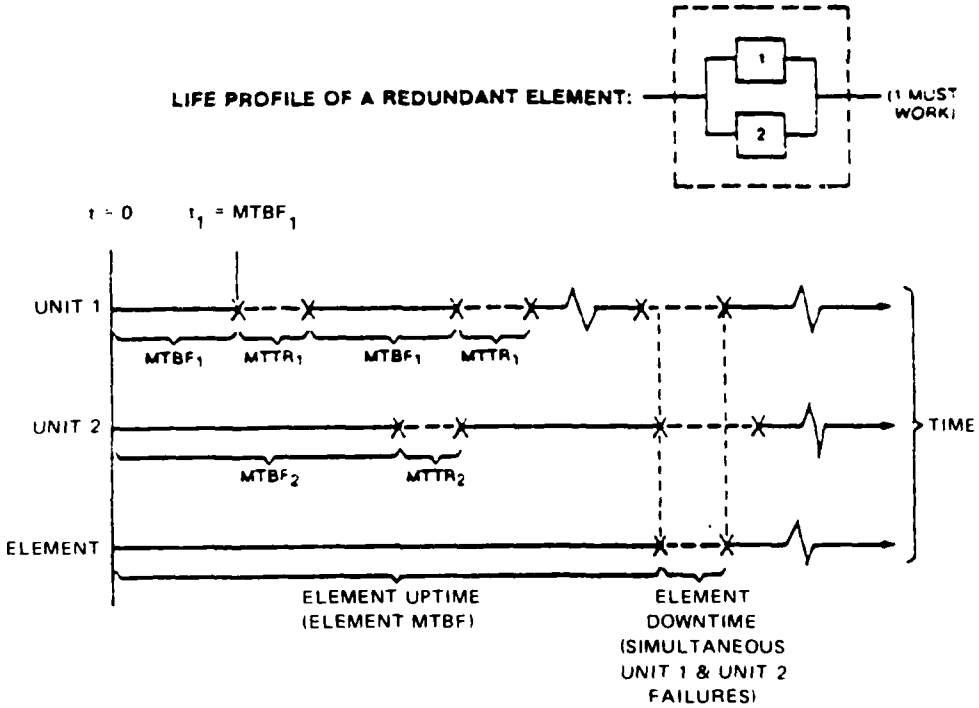

$$A \quad \text{AVAILABILITY} = \frac{(\text{TOTAL UPTIME})}{(\text{TOTAL UPTIME}) + (\text{TOTAL DOWNTIME})}$$

Figure 3-71. Redundant unit MTBF-MTTR profiles.

EFFECTS OF MAINTENANCE AND SPARING UPON THE LIFE PROFILE OF A REDUNDANT ELEMENT

PS = PROBABILITY OF HAVING A GOOD SPARE WHEN NEEDED
TR = TURN-AROUND TIME FOR OBTAINING A GOOD SPARE WHEN SPARES STOCK IS DEPLETED
NIS = NUMBER OF INITIAL SPARES AT THE BEGINNING OF THE SPARING PERIOD

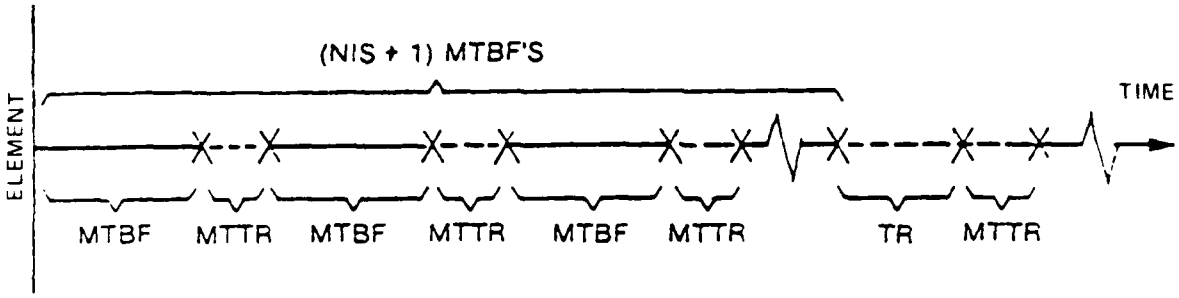

EQUIVALENT AVAILABILITY PROFILE WITH LESS THAN 100% SPARES

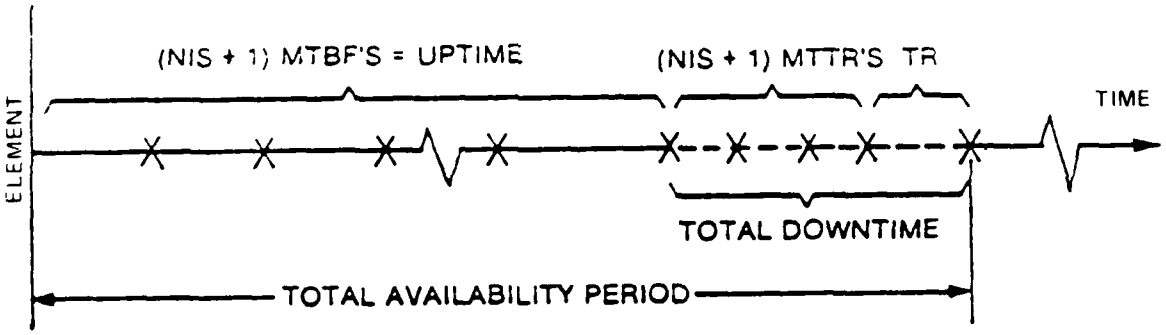

$$A = \text{AVAILABILITY} = \frac{\text{MTBF}}{\text{MTBF} + \text{MTTR} + \text{TR}\,(1\text{-PS})}$$

Figure 3-72. Maintenance and sparing effects on profiles.

indicators should be checked once per month at attended sites, and whenever a remote site is entered. Realignment should be scheduled if the meter indications are abnormal. Reading and recording the built-in meter indications do not require more than 5 minutes per radio rack. Routine maintenance (meter readings and general visual inspection of the equipment) of a typical relay site should take about 1/2-hour. Routine maintenance of support equipment (battery banks, chargers, etc) should be performed in accordance with manufacturers' recommendations. The following support items should be considered.

a. Battery Banks. The electrolyte level and specific gravity of each cell should be checked at least every 6 months. Battery racks should be checked for corrosion and cleaned accordingly.

b. Battery Chargers. Battery chargers should be checked for correct alarm operation, as well as appropriate float and equalize voltages (indicated by meters on battery charger).

c. Pressurization Equipment. Pressurization equipment should be checked not less than once a year for leaks and proper operation.

d. Engine Generators. Comparatively speaking, engine generators (if applicable) require a considerable amount of routine maintenance. For routine maintenance cycles, refer to the applicable service manual.

3.3.3.2.2 Standard Testing. Standard tests (such as transmit power, transmit frequency, level checks/adjustments, BER measurements, and net path loss measurements) should be performed on an annual basis. Standard performance tests require approximately 2 hours per radio rack and 1 hour per channel bank unit.

3.3.3.2.3 Maintenance Log. A maintenance log is recommended as an aid in determining trends in equipment performance. The maintenance log should show normal system levels and frequencies. Reference to recorded levels and frequencies removes any uncertainty with respect to future measurements. The recording of these parameters also provides an aid in pinpointing gradual degradation. The maintenance log should also reflect the BER and noise values obtained at initial alignment, so system quality can be positively identified at future times. Finally, the log should reflect the net path loss measured at initial system turn on, so trouble in the antenna, waveguide run, or antenna alignment can be detected. Timely review of maintenance logs will provide management with an input for planning cost-effective maintenance on a scheduled basis.

3.3.3.3 Corrective Maintenance Concepts. As discussed earlier, there are three general levels of maintenance involved in a total system: organizational, intermediate, and depot. These three levels are normally referred to as levels 1, 2 and 3, with the depot level (level 3) being the highest level.

3.3.3.3.1 Level 1 Maintenance (Organizational). Level 1 maintenance is defined as on-line equipment repair by isolation, removal, and replacement of faulty modules, as well as the adjustment/checkout required to restore the system to an operational status after a fault is detected. Level 1 maintenance is normally performed by mobile teams dispatched from maintenance centers. Each

maintenance center will have at least one spare module of each type applicable. Along with a complete complement of spare modules, each maintenance center is normally equipped with the test equipment necessary for adjustment/checkout required to restore the system to an operational status.

3.3.3.3.2 Level 2 Maintenance (Intermediate). Level 2 maintenance, commonly referred to as the intermediate level, consists of on-site replacement of parts which are easily identified and replaced, and which require no subsequent module alignment. Problems serviceable at this level are usually limited.

3.3.3.3.3 Level 3 Maintenance (Depot). Depot maintenance consists of complete overhaul and major repair, such as repair of failed modules replaced as part of level 1 maintenance.

4.0 SYSTEM ANALYSIS

4.1 Propagation. This section is intended to provide a background on how the transmission media can affect the overall system. Usable equations dealing with propagation and path analysis are presented in order to provide both an introduction to transmission problems and their solution and a usable reference for future systems.

4.1.1 Microwave Propagation Fundamentals. Because the path of a radio beam is often referred to as line of sight (LOS), it is thought of as a straight line in space from the transmitting to the receiving antenna. The fact that the path is neither straight nor a line leads to a rather involved explanation of its behavior.

A microwave beam and a beam of light are similar in that both consist of electromagnetic energy. The difference in their behavior is primarily due to the difference in frequency. In spite of the large differences in frequency, many of the same optical principles used when describing light are applicable to RF energy in the microwave frequencies. The most significant of these properties are refraction, reflection, and diffraction.

4.1.1.1 Refraction Considerations. Refraction occurs because electromagnetic energy travels at different speeds in different media. The speed of radio waves is maximum in a vacuum. In any other medium, radio waves travel much slower. This principle is illustrated in figure 4-1.

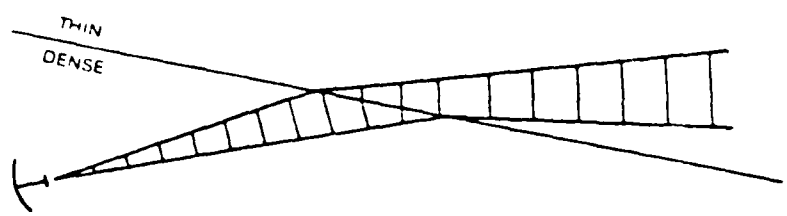

Figure 4-1. Refraction at a boundary between air at different densities.

A basic characteristic of electromagnetic energy is that it travels in a direction perpendicular to the plane of constant phase; i.e., if the beam were instantaneously cut at a right angle to the direction of travel, a plane of uniform phase would be obtained. If, on the other hand, the beam entered a medium of nonuniform density and the lower portion of the beam traveled through the more dense portion of the medium, its velocity would be less than that of the upper portion of the beam. The plane of uniform phase would then change, and the beam would bend downward. This is refraction, just as a light beam is refracted when it moves through a prism.

The atmosphere surrounding the Earth has the nonuniform characteristics of temperature, pressure, and relative humidity, which are the parameters that determine the dielectric constant and, therefore, the velocity of propagation. The Earth's atmosphere, then, is the refracting medium that tends to make the radio horizon appear closer or farther away. This is why a microwave beam usually follows a slightly curved path in the vertical plane and, also, why obstructions may create more of a problem at particular times of day or during particular weather conditions than at others.

A term which describes the refractivity of radio waves in air is the "radio refractivity." For frequencies up to approximately 30 GHz in air, the radio refractivity factor N is defined as

$$N = 77.6 \frac{P}{T} + 3.73 \times 10^5 \frac{e}{T}$$

where

P = total atmospheric pressure in millibars,

T = absolute temperature in °K, and

E = partial pressure of water vapor in millibars.

Another expression for the radio refractivity N is

$$N = (n-1) \times 10^6$$

where

n = the radio refractivity index of the atmosphere, typically 1.0003, varying between 1.0 (free space, above atmospheric influence) and about 1.00045 at a maximum.

4.1.1.2 Reflection Considerations. Microwave radio waves (short wavelength) are usually focused by dish-shaped metal reflectors. Such reflectors concentrate all the energy into a narrow beam that can be directed like the light beam of a searchlight. This concentration of radio energy allows transmission over longer paths with much less power than would otherwise be required with nondirectional antennas. While the ability to reflect radio waves is very useful for focusing them into a beam, reflection is also a primary source of received signal variation, better known as reflective multipath. Reflections occur when radio waves strike a smooth surface such as water or smooth earth. If both reflected and direct waves reach the receiving antenna, it is possible for the phase of the two waves to cancel each other and reduce the received signal strength. This is due to the difference in path lengths traveled by two signals of equal frequency. This concept is illustrated as multipath propagation in figure 4-2.

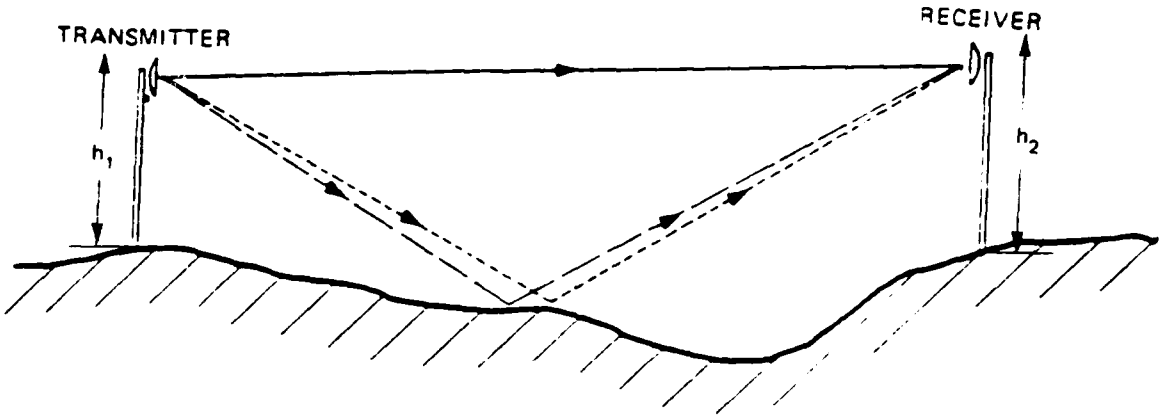

Figure 4-2. Ground-reflected multipath propagation.

Depending on the length of the reflected path compared to the direct path, the reflected wave may arrive at the receiving antenna either in phase, out of phase, or partially out of phase with the direct wave. Under conditions where the reflecting surface is very smooth and the reflected wave and direct wave are exactly out of phase at the receiver, the reflected wave may temporarily almost completely cancel the direct wave and cause a very deep fade in received signal strength. Cancellation is worse when the reflecting surface is a calm body of water, smooth moist earth, or the thin layer of hot air that lays just above the surface of desert sand in the daytime.

If the reflections are caused by the atmosphere, better known as ducts, changes in the refractive qualities of the air will cause the point of reflection to shift and the reflected and direct waves will pass in and out of phase with each other, causing wide variations in received signal strength.

Rough terrain, such as a rocky or wooded area, is generally a very poor reflector of radio waves. Such terrain either absorbs much of the radio energy or scatters it so that little reflected energy reaches the receiving antenna. For this reason, radio paths with reflection points in rough terrain have very few multipath propagation problems from reflecting terrain.

Reflection point coefficients are used to analyze the effects of the terrain on the microwave beam. Assuming a flat Earth condition (ideal conditions), the relationship between the antenna heights and the distances from the respective ends to the reflection point (in miles) is

$$\frac{h_1}{h_1 + h_2} = \frac{d_1}{d_1 + d_2} = \frac{d_1}{D}$$

where

h_1 = elevation of lower antenna,

h_2 = elevation of higher antenna,

d_1 = distance in miles from the h_1 end to the reflecting point, and

$d_1 + d_2 = D$ = the path length in miles.

More practical equations based on the actual curvature of the earth are presented in paragraph 4.1.3.

4.1.1.3 Diffraction Considerations and Fresnel Zones. Ordinarily, radio paths are selected so that there is a direct LOS between the transmitting and receiving antennas. However, a direct path between transmitting and receiving antennas is not necessarily sufficient for good radio transmission. If a radio wave passes near an obstacle, such as a hilltop or a large building, part of the wave front will be obstructed and the amount of energy received will differ from that received if no obstacle were there. The phenomenon which causes this difference is known as diffraction.

Fresnel zone clearance is an important technique used to avoid undesirable diffraction effects on the microwave beam. The first Fresnel zone is used to measure the effect of obstruction on the microwave beam at a particular frequency in question. The second and higher order Fresnel zones are very important under other conditions, such as over-the-water paths.

The Fresnel zones are a series of concentric ellipsoids surrounding the path. The first Fresnel zone is the surface containing every point for which the sum of the distances from that point to the two ends of the path is exactly one-half wavelength longer than the direct end-to-end path. The nth Fresnel zone is defined in the same manner, except that the difference is n half-wavelengths.

The first Fresnel zone at any point in the path may be calculated from the following formula:

$$F_1 = 72.1 \times (d_1 d_2 / fD)^{1/2}$$

where

F_1 = first Fresnel zone radius in feet,

d_1 = distance from one end of path to reflection point in miles,

D = total length of path in miles,

$d_2 = D - d_1$, and

f = frequency in GHz.

If the value for the first Fresnel zone is known and it is desired to calculate the nth zone, where n is the Fresnel zone number, then

$$F_n = F_1 \sqrt{n}$$

Or, to calculate any Fresnel zone directly

$$F_n = 72.1 \sqrt{\frac{n d_1 d_2}{fD}}$$

The Fresnel zone calculations play an important role as a path profiling tool and, therefore, are applied in paragraph 4.1.3.

A simplified physical explanation of diffraction and the part the Fresnel zone clearance plays in its effects on the microwave beam is shown in figures 4-3 and 4-4. In figure 4-3 a succession of unobstructed radio wave fronts are shown progressing from the transmitter to the receiver. The entire surface of each individual wave front contributes energy to the receiving antenna. However, energy from some portions of the wave front tends to cancel energy from other portions because of differences in the total distances traveled. The shaded areas in figure 4-3 show the paths of energy that cancel some of the energy transmitted by the paths shown unshaded. The cancellation is such that half of the energy reaching the receiver is cancelled out. Most of the energy that is received is contributed by the large unshaded central area of that portion of the wave front that is closest to the receiver.

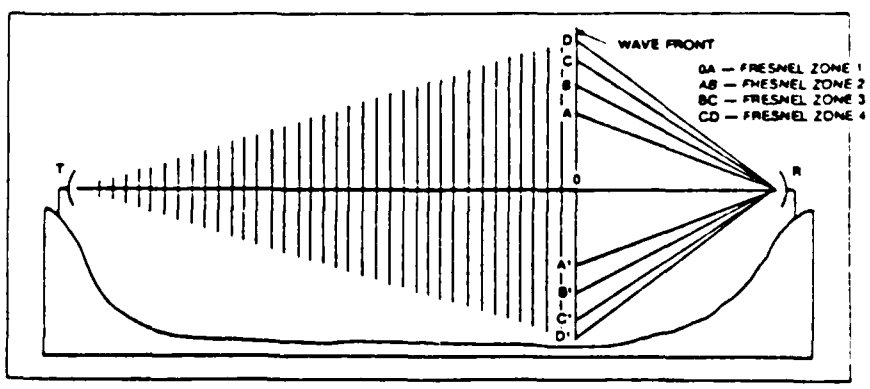

Figure 4-3. Energy contribution from a wave front to a receiver.

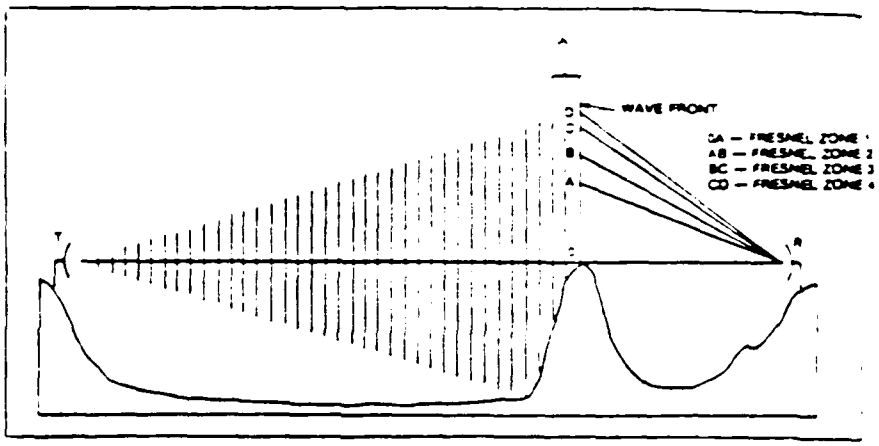

Figure 4-4. Obstructed wave front.

If an obstacle is now raised in front of the wave so that all of the wave front below the LOS is obstructed (shown in figure 4-4), half of the broad central area is obstructed and a greater loss of energy occurs. Under this condition, the radiated power reaching the receiver is reduced to one-fourth normal, or by 6 dB. If the obstruction is lowered (or the receiving antenna raised) so that all of the central zone is exposed, the power received by the receiving antenna is even greater than it would be if the obstacle were not there. This is due to phase reinforcement, illustrated in figure 4-5.

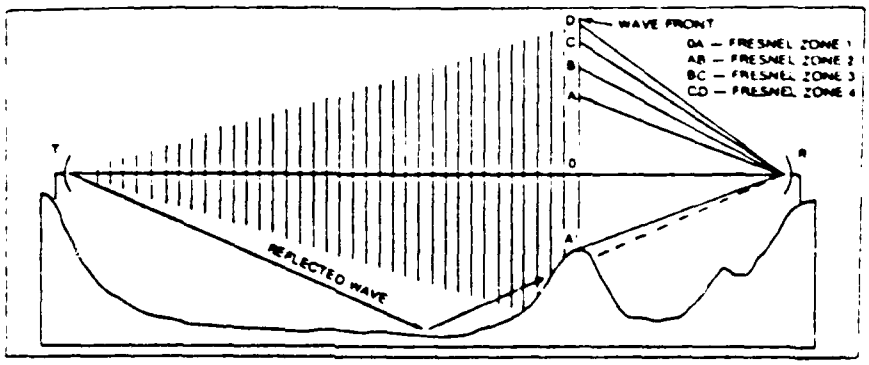

Figure 4-5. Lowered obstruction effects on wave front.

As seen in figures 4-3 through 4-5, first Fresnel zone clearance is typically adequate, and usually only six-tenths of the first Fresnel is enough to avoid excessive loss in signal strength due to diffraction.

The microwave beam will behave in defined patterns when any obstructions play a part in its propagation. At the point of grazing over a particular obstacle, the beam is diffracted. This diffraction creates a shadow area where some of the electromagnetic energy is redirected in a narrow wedge. This phenomenon affects the microwave beam in different ways, depending upon the shape of the obstruction. A knife-edge obstruction creates the minimum amount of loss, which is typically 6 dB at the point of grazing. A smooth sphere obstruction creates the maximum amount of diffraction loss. These types of diffraction attenuation are demonstrated by figure 4-6, which shows the amount of loss in decibels as compared with free space loss at the same operating frequency. These principles of propagation are also discussed in section 4.1.3, where their application in actual path planning is demonstrated.

4.1.1.4 Free Space Loss. Another phenomenon creating significant loss across the microwave path is free space attenuation. Free space attenuation is defined as the loss obtained between two isotropic antennas in free space where there are no ground influences or obstructions - in other words, where blocking, refraction, diffraction, and absorption do not exist.

An isotropic antenna is defined as one which radiates or receives energy uniformally in all directions. Although such an antenna is physically unrealizable, it provides a convenient reference point for calculations. Path calculation charts for microwave transmission are customarily prepared on the basis of free space loss between isotropic antennas, and antenna gains are specified with respect to the gain of an isotropic antenna. These gains may be easily applied to obtain the net loss from the waveguide out at the transmitter to the waveguide in at the receiver. This is often referred to as the net loss for the path. The derivation of the formula for free space loss involves the isotropic radiator, and is stated mathematically as

$$A = 96.6 + 20 \log F + 20 \log D$$

where

A = free space attenuation between isotropic antennas, in dB,

F = frequency in GHz, and

D = path distance in miles.

These losses may also be computed from the nomograph provided in figure 4-7.

For short distances, such as the distance between two antennas on a single tower, another formula may be used. Simply stated, this formula is, "For a distance equal to one wavelength, the loss between two isotropic antennas will be 22 dB. Each time the distance is doubled, the loss incurred will be 6 dB greater."

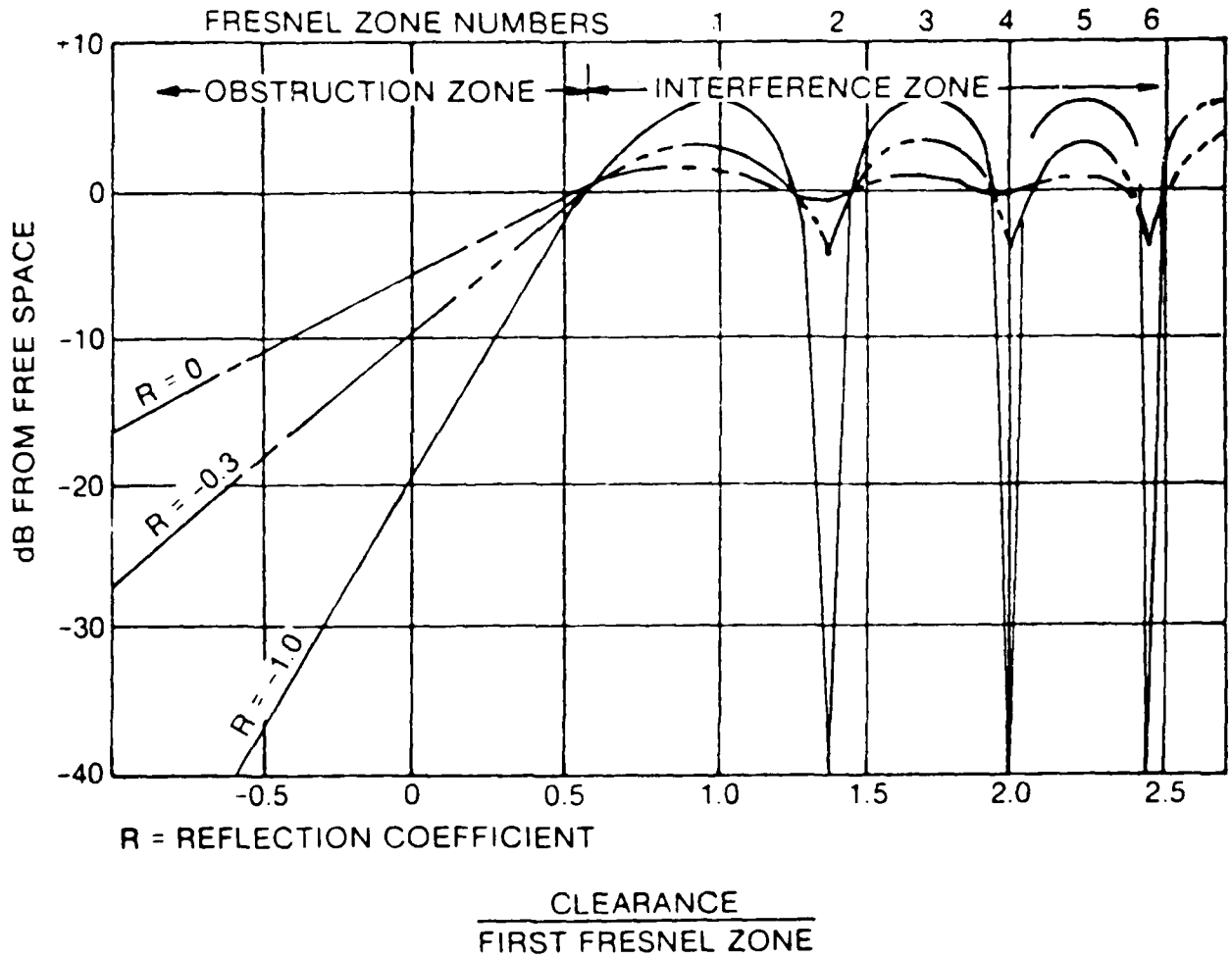

Figure 4-6. Diffraction attenuation.

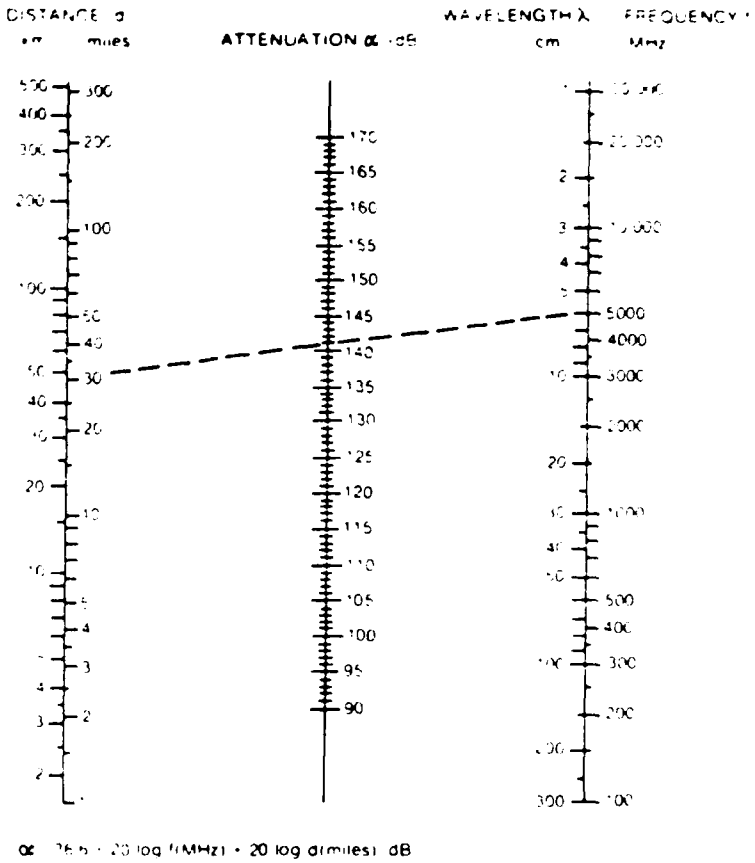

Figure 4-7. Free space loss between isotropic antennas.

4.1.1.5 Rain Attenuation. Rain and snow also attenuate the microwave beam by mechanisms known as absorption and scattering. These effects may become profound, depending upon variables inherent in the overall system design, and are present to some degree at all microwave frequencies. The effect of rain or snow on the microwave signal is small enough to be insignificant for the bands of 8 GHz and lower. But at higher frequencies, the excess attenuation due to rain increases rather rapidly, and, in the bands above about 10 GHz, is great enough to significantly affect path length criteria in areas of heavy precipitation. At microwave frequencies of 11 and 12 GHz or above, rain attenuation can be very serious.

The degree of attenuation is a function of a number of variables, including the frequency band, size and shape of the drops, and the distribution of rain (in terms of its instantaneous intensity) along the path. The total amount of rain that falls over an extended period is not important, but rather the maximum instantaneous intensity of fall reached at any given moment and the

size of the area over which the high intensity cell extends at that moment. Most available rainfall statistics cast little light on these matters, and, consequently, are of only limited value in estimating the magnitude of rain attenuation effects. Figure 4-8 gives theoretical path loss in decibels per kilometer versus rainfall rate in inches and millimeters per hour for several frequency bands. The topic of rain attenuation effects on BER are covered in section 4.1.2.

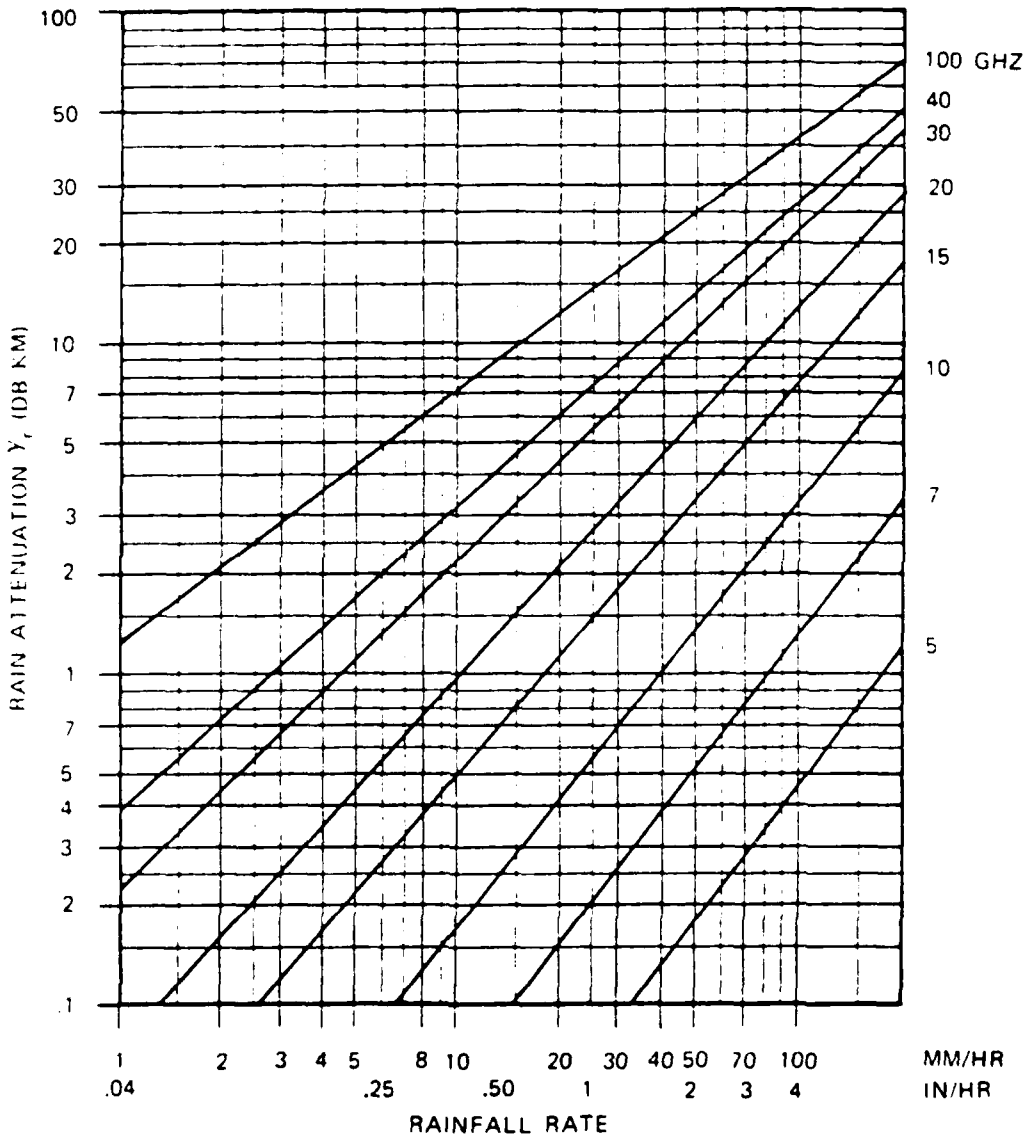

Figure 4-8. Rain attenuation versus rainfall rate (theoretical).

4.1.1.6 Other Fading Mechanisms. Fading effects over a particular path may become severe, depending upon the terrain, operating frequency, weather, and other factors. Fading mechanisms can be categorized into multipath fading and absorption fading. These categories may further be broken down into the following:

a. Normal fading - This type occurs a large percentage of the time with a predictable behavior.

b. Abnormal fading - This type occurs a very small percentage of the time with a very unpredictable behavior.

These two categories are discussed later with a categorization of multipath and absorption fading mechanisms.

4.1.1.6.1 Multipath fading. Multipath fading mechanisms may be any one of the following types:

a. Ground- or water-reflected multipath.

b. K-factor type multipath.

c. Atmospheric-reflected multipath.

d. Scintillating type atmospheric multipath.

Ground- or water-reflected multipath propagation was previously illustrated in figure 4-2. This type of fading is stable and is classified as a normal type of fading with predictable behavior. Over various types of land, the destructive interference is usually not as severe as over water (specular reflections). Usually, space diversity can correct part of the problems created by reflective terrain paths. Therefore, this topic is discussed further in section 5.2 as it relates to diversity techniques.

The K-factor is a term used to describe the ratio of the refractive path radius to the time Earth radius, and its changes are sometimes responsible for severe fading. K-factor type fading is a phenomenon caused by the variations with height of the radio refractive index, N, in the atmosphere (dN/dh). (See section 4.1.1.1 for computation of N.) Changing the pressure, temperature, or water vapor will cause the refractivity factor, N, to change. This type of fading may also be referred to as subrefraction (Earth bulge) and superrefraction (Earth flattening).

Subrefraction is caused by high surface temperatures, along with an increasing vapor content of the atmosphere with height. Water vapor content will increase when warm moist air passes over cool land surfaces. This situation, typical of low-lying humid areas such as the gulf areas, will cause the microwave beam to bend away from the Earth as illustrated by figure 4-9.

Superrefraction (Earth flattening) is caused by a rise in temperature and a decrease in water vapor content with height. These conditions can alter the

K-factor and cause the microwave beam to bend toward the Earth. This phenomenon is illustrated in figure 4-10 and is typical of coastal regions.

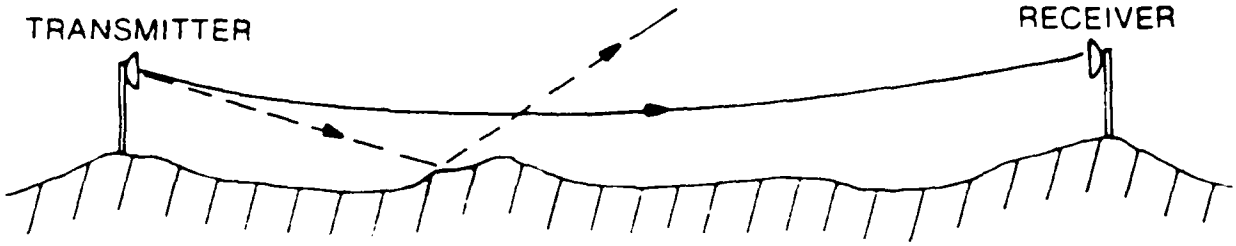

Figure 4-9. Subrefraction caused by variations of the K-factor in the atmosphere.

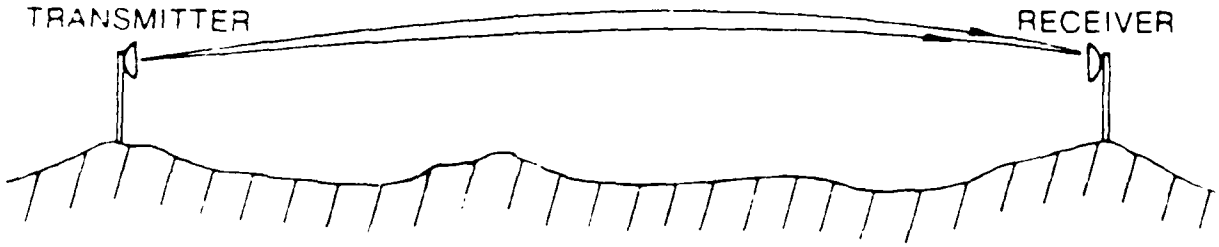

Figure 4-10. Superrefraction caused by variations of the K-factor with height in the atmosphere (dN/dh).

Atmosphere-reflected fading is termed an abnormal type of fade because it is unpredictable most of the time. This type of fade is actually a severe type of K-factor fade, sometimes called ducting, and is caused by stratification of air masses in the atmosphere. These ducts of air may exist above, below, or directly in the path and may cause sharp, deep fades. Figures 4-11 through 4-14 illustrate this type of fading with air ducts at various levels.

Multipath caused by an elevated duct (figure 4-11) is an abnormal type of fading caused by an elevated inversion layer that is normally high enough so that it does not cause problems. This fading can normally be corrected by use of either frequency or space diversity. Multipath caused by ground-based ducting (figure 4-12) can have a severe refractive index change, causing a reflective boundary such as that of a fog layer. This type of fading can be reduced by less clearance or using some type of diversity. Deflection of the microwave signal by a duct in the path (figure 4-13) can cause total path blockage and can only be remedied by designing shorter paths. (Diversity techniques normally will not cure this type of fading.) Deflection of the

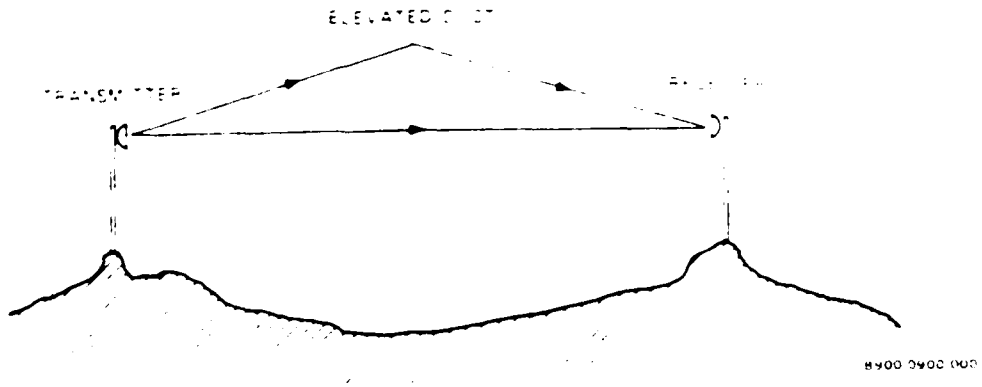

Figure 4-11. Multipath caused by elevated-duct reflections.

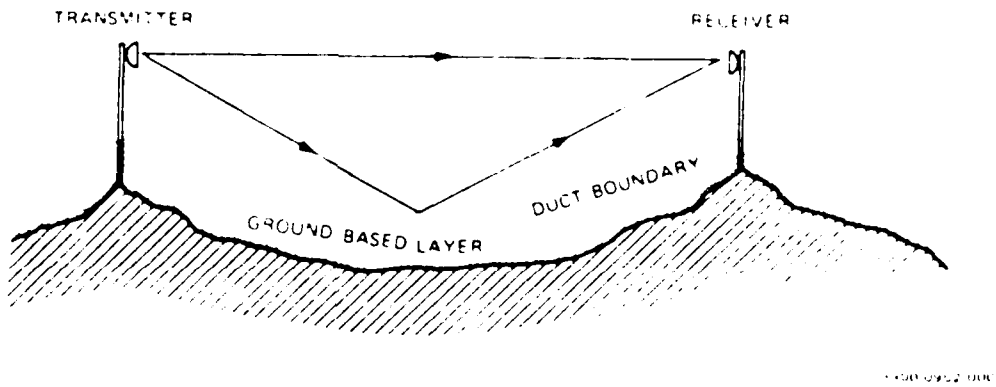

Figure 4-12. Multipath caused by ground-based ducting layer.

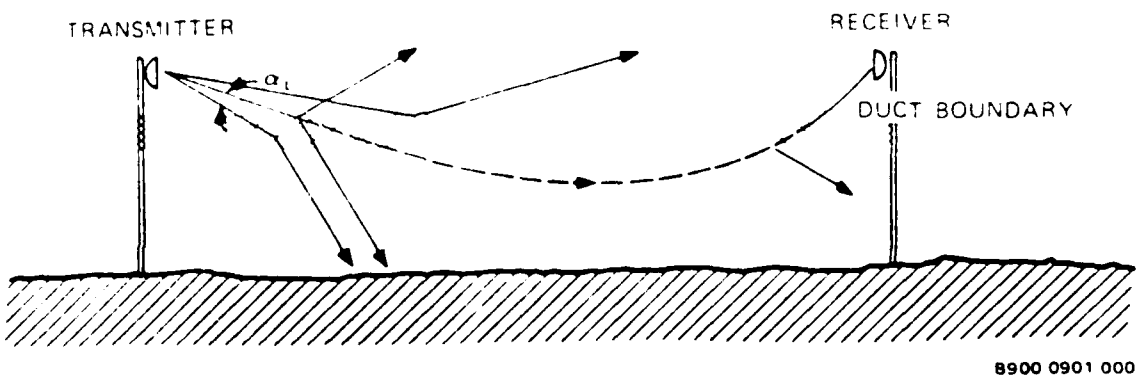

Figure 4-13. Deflection of a microwave signal by a duct boundary at the elevation of a path line.

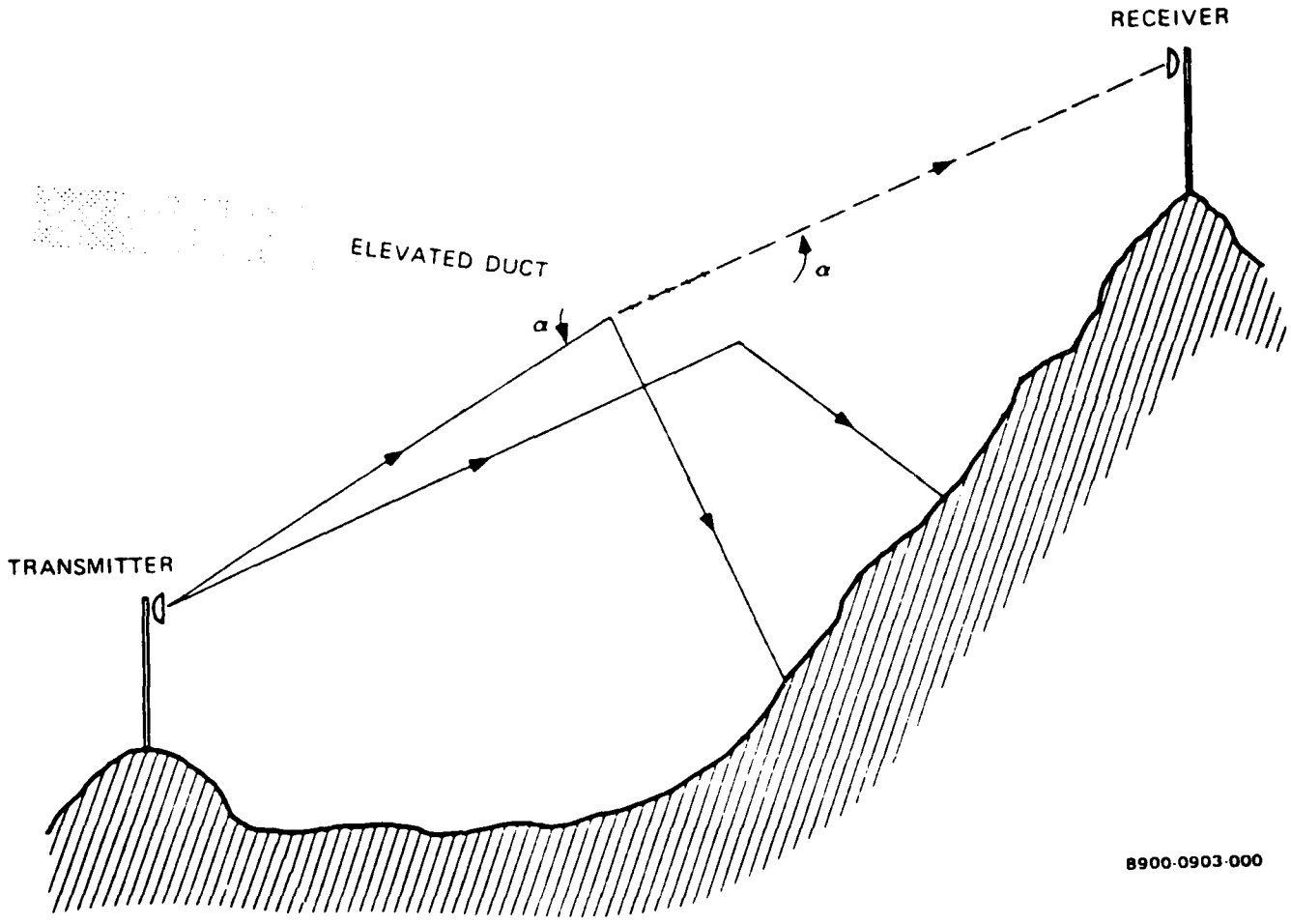

Figure 4-14. Deflection of a microwave signal by an elevated duct.

microwave signal by an elevated duct is illustrated in figure 4-14 for a high-low path case (one end of the path at a much higher elevation than the other). If a sufficient α is presented, the microwave beam will penetrate the duct. Usually an angle of 0.5 degrees is required, with severe cases requiring up to 2.5 degrees.

Scintillating type atmospheric multipath, sometimes classified as depressed level attenuation, is a normal type of fade that is usually quite shallow and normally does not adversely affect propagation. This type of fading, illustrated by figure 4-15, is due to the nonhomogeneous nature of the atmosphere. Only without wind conditions can this type of multipath cause multipath signal fading.

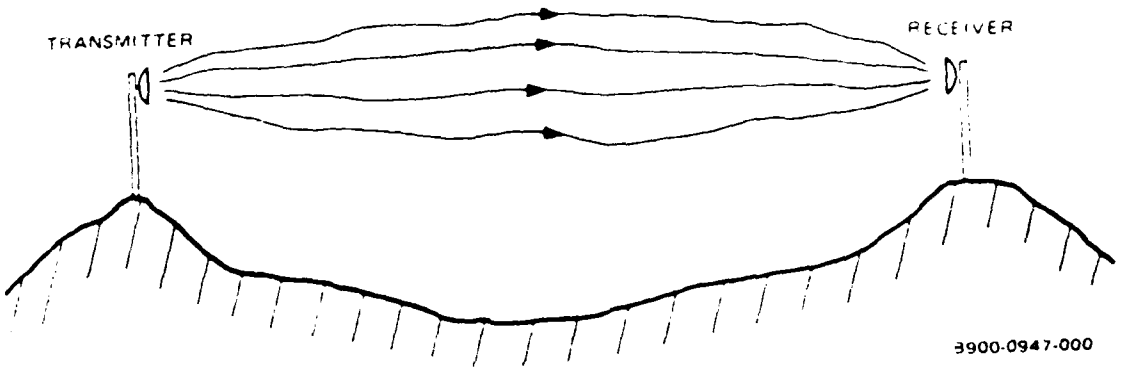

Figure 4-15. Scintillating type atmospheric multipath.

4.1.1.6.2 Absorption Fading. Absorptive type fading may be caused by the following mechanisms:

a. Rain attenuation.

b. Atmospheric absorption.

c. Fog absorption.

d. Dust absorption.

Rain attenuation was discussed in section 4.1.1.5. Its effect on a digital system is discussed in more depth in section 4.1.2.

Atmospheric absorption is negligible under 11 GHz, and analysis may not be required at frequencies above 11 GHz if the system possesses reasonable fade margin. Table 4-1 illustrates the attenuation due to atmospheric absorption as a function of frequency and path length.

TABLE 4-1

ATTENUATION DUE TO ATMOSPHERIC ABSORPTION

Path Length (km)	Path Length (miles)	Attenuation (dB)				
		2-4-6 GHz	8 GHz	10 GHz	12 GHz	14 GHz
32.3	20	0.20	0.26	0.32	0.38	0.48
64.5	40	0.40	0.52	0.64	0.76	0.96
96.8	60	0.60	0.78	0.96	1.14	1.44
129.0	80	0.80	1.04	1.28	1.52	1.92
161.3	100	1.00	1.30	1.60	1.90	2.40

Fog absorption also has a negligible effect on radio propagation below 11 GHz. However, fog conditions are normally the result of other factors that do affect the microwave signal below 11 GHz, such as temperature inversion or high humidity conditions. Therefore, in areas that do sustain heavy fog conditions at various times, shorter paths and adequate Fresnel clearance are recommended.

Dust and sand absorption is a function of two things. First, it is a function of the operating frequency and, second, a function of the density of the sand or dust in the atmosphere. For conditions of dust and sand concentrations in the atmosphere that limit optical visibility to 10 km (6.2 mi), the following rules may be applied at 11 GHz:

a. Sand is approximately 0.1 dB/km loss.

b. Dust is approximately 0.4 dB/km loss.

For a path length of 40 km (24.8 mi), a maximum attenuation at 11 GHz would be 16 dB.

4.1.2 Interference and Rain Effects on Digital Systems. Interference factors as they relate to FM microwave are covered in detail in various texts listed in appendix B. Therefore, the purpose of this subsection is to summarize some of the mechanisms and then treat, in an in-depth manner, some of the interference and rain effects as they relate to digital systems.

4.1.2.1 Interference Fundamentals. Interference is of two basic types:

a. Intrasystem interference constitutes interference within the system and is not dependent upon outside influences.

b. External interference occurs due to external influences only and is not dependent upon interference sources within the system itself.

Intrasystem interference is categorized as three basic types, as illustrated in figures 4-16 and 4-17. These three interference types are

a. Overreach interference.

b. Adjacent section interference.

c. Spur interference.

Overreach interference involves interference between two points in a multiple hop path. The overreach problem occurs when a fade situation exists between points C and D in the multiple hop system illustrated in figure 4-16. During this fade situation, the frequency F_1 transmitted from point A is received at a substantial level at point D, thereby overreaching the original destination and creating self-interference.

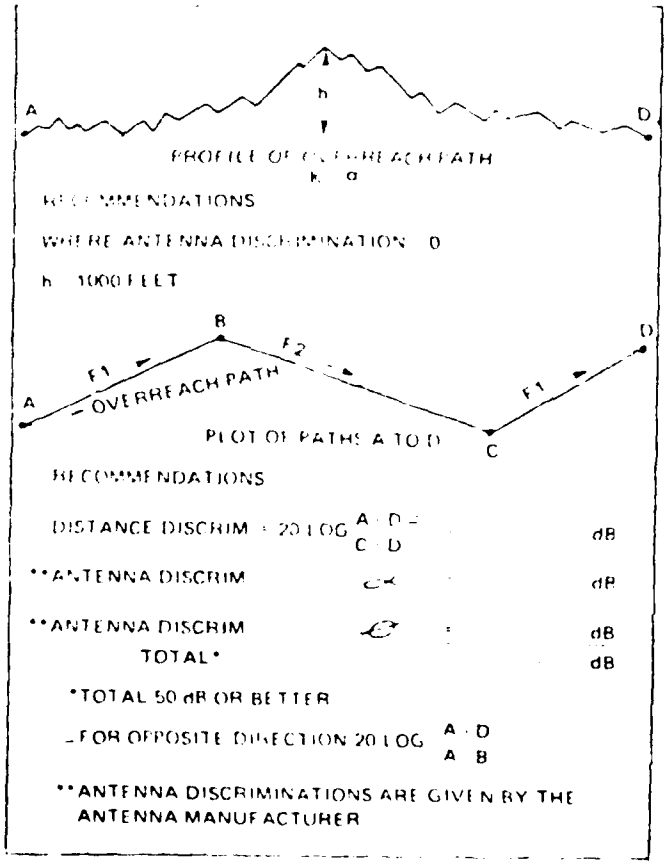

Figure 4-16. Overreach interference criteria.

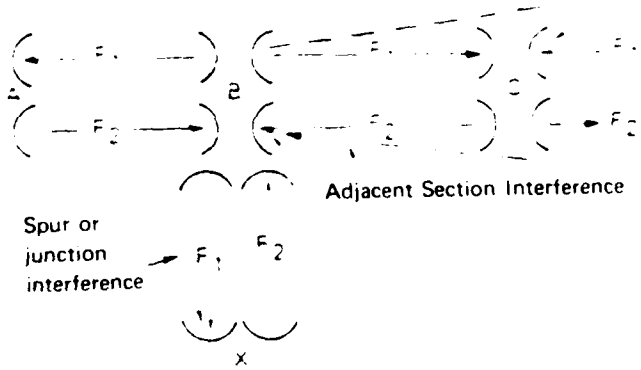

Figure 4-17. Adjacent section and junction *or spur interference.*

The following factors may be considered in order to avoid this form of interference:

a. Use a longer overreach path from A to D as compared with the C to D path.

b. Design the paths with a higher antenna discrimination factor between A and D (the overreach path). The antenna discrimination factor is expressed in terms of angles α and β in figure 4-16 and is a function of type of antenna used. By increasing the angles α and β, the discriminator factor and the overreach interference are enhanced.

c. Select the particular routes so earth blocking will prevent large amounts of overreach interference. If earth blocking is used to eliminate overreach, the blocking should be at least 1,000 feet on a flat Earth profile.

Both adjacent section and spur interference are illustrated in figure 4-17. These two types are similar in that they create the most problems with far-end crosstalk (FEXT) and, typically, only occur in a 2-frequency plan such as frequency diversity. This type of interference may best be eliminated by increasing the antenna

discrimination factor, which means the energy in side lobes is reduced with respect to the energy in the main antenna lobe.

External interference is of many types and can usually be eliminated by proper frequency coordination between two independent operating systems. Radar interference and parallel system interference constitute external interference. Radar interference, illustrated in figure 4-18, is usually a problem caused by the second and third harmonics interfering with the microwave path in question. If no filtering is provided on the pulsed output of the radar, these second and third harmonics may have an effective radiated pulse power (ERPP) of as high as +60 dBm (1 kW). Radar interference may be minimized by observation of two fundamental rules:

a. The path from radar to the receiver in question should be no less than 10 miles.

b. The receiving antenna discrimination should be at least 30 dB based on the angle α, as illustrated in figure 4-18.

Parallel system interference is illustrated in figure 4-19 as two-way interference. The factors involved in parallel system interference are as follows:

a. Distance.

b. Antenna discrimination.

c. Receiver sensitivity.

d. Receiver selectivity.

At the present time, there is not much data on parallel system interference as it relates to the BER in a digital system.

4.1.2.2 Interference Effects on Digital Systems. A series of experiments have been conducted on Collins MDR-6 and MDR-11 microwave digital radios to measure and to verify the interference characteristics of a digital channel when it is subjected to various types of interference. Cochannel interference curves were run at 6 and 11 GHz to establish the degradation and threshold that arise from various carrier-to-interference (C/I) ratios. These curves are illustrated by figures 4-20 through 4-22. The C/I ratio is defined by the following:

$$C/I\ (dB) = \frac{\text{desired signal level (dB)}}{\text{interfering signal level (dB)}}$$

Simply stated, the calculation of the C/I ratio is as follows:

$$C/I = \begin{cases} \text{[desired - interfering transmitter power] (dB)} \\ + \text{[desired - interfering transmitter antenna gain] (dB)} \end{cases}$$

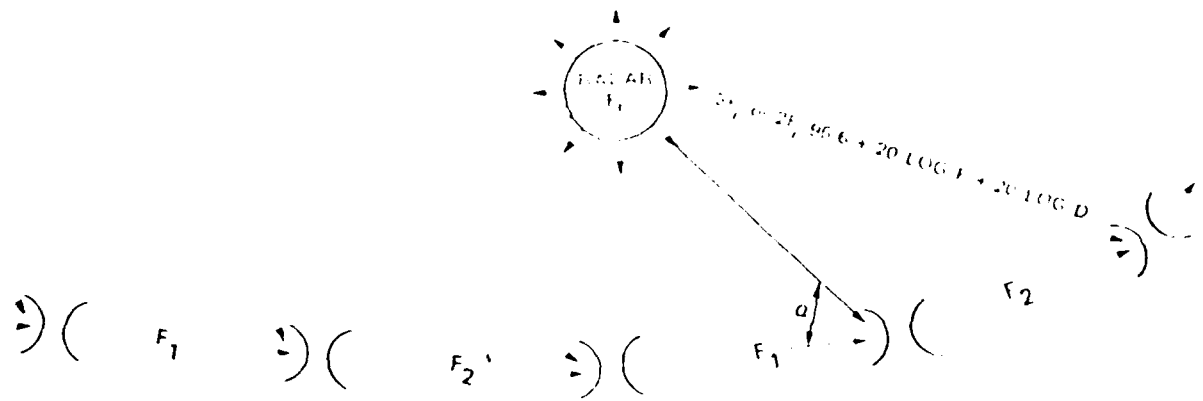

COMPUTATION FOR UNFILTERED RADAR

E.R.P.P. OF 2nd OR 3rd HARMONIC	+60
GAIN OF RECEIVING ANTENNA	G
	60+G
PATH LOSS RAD. 96.6 + 20 LOG F + 20 LOG D	P
ANTENNA DISCRIMINATOR AT a DEGREES	D
FILTER AND WAVEGUIDE LOSSES	L
RADAR HARMONIC INPUT (60+G-P-D-L)	R
COMPUTED MICROWAVE SIGNAL INPUT	S
SIGNAL TO INTERFERENCE RATIO (S+R)	5 dB

REQUIREMENTS

HARMONIC ENERGY IN BAND	MESSAGE	30 dB
	TELEVISION	45 dB

FUNDAMENTAL TEN MILES + 30 dB

ANTENNA DISCRIMINATION

NOTE

FOR [illegible] MICROWAVE TERMINALS AT RADAR LOCATIONS LESS THAN TEN MILES [illegible] POWERED AZIMUTH OPERATED [illegible] TION BLOCKING IS DESIRABLE.

USE 3F1 OR 2F1 DEPENDING ON THE HARMONIC [illegible] ENCY IN QUESTION

Figure 4-18. Radar interference case.

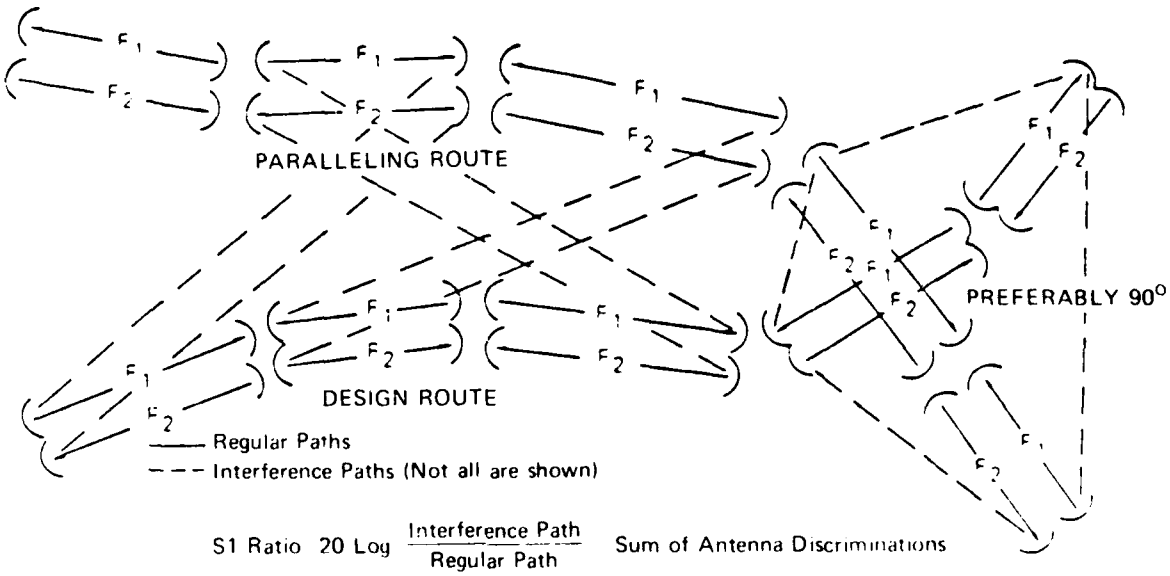

S1 Ratio 20 Log $\frac{\text{Interference Path}}{\text{Regular Path}}$ Sum of Antenna Discriminations

S1 Ratio Recommendation 66 dB for Co-channel

NOTE
Cross polarization advantage at angles close to 90° is zero and may be negative in some combinations

Figure 4-19. Interference coordination of paralleling systems.

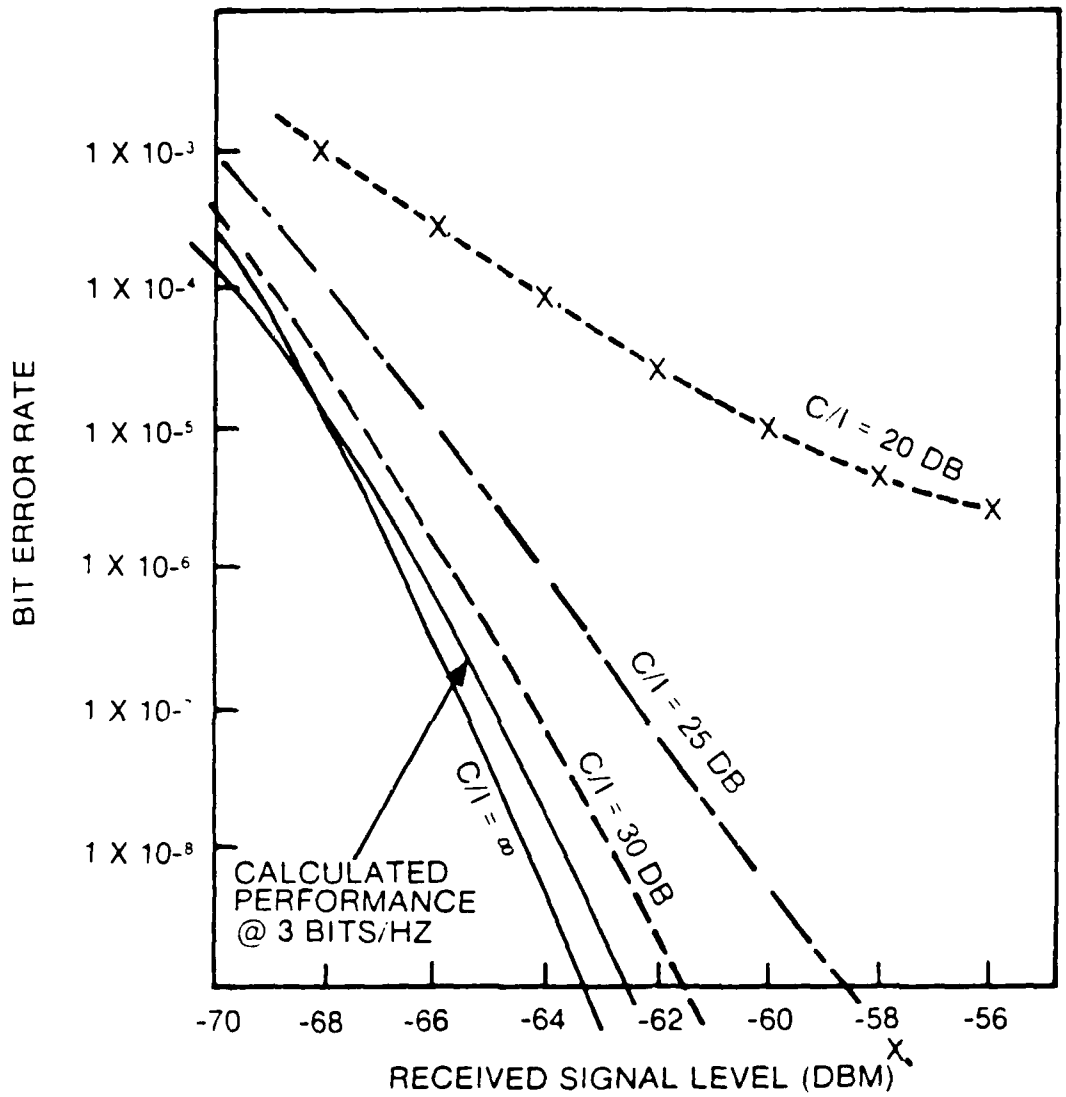

Figure 4-20. Cochannel interference, MDR-6.

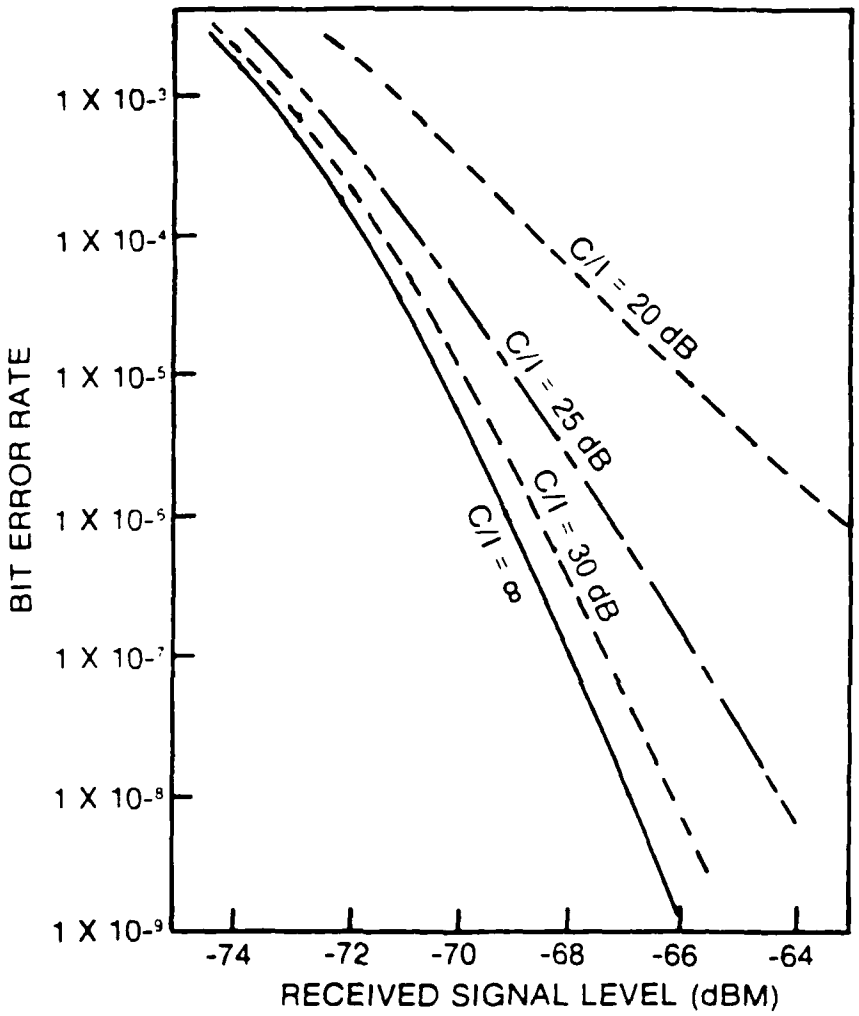

Figure 4-21. Cochannel interference, MDR-11.

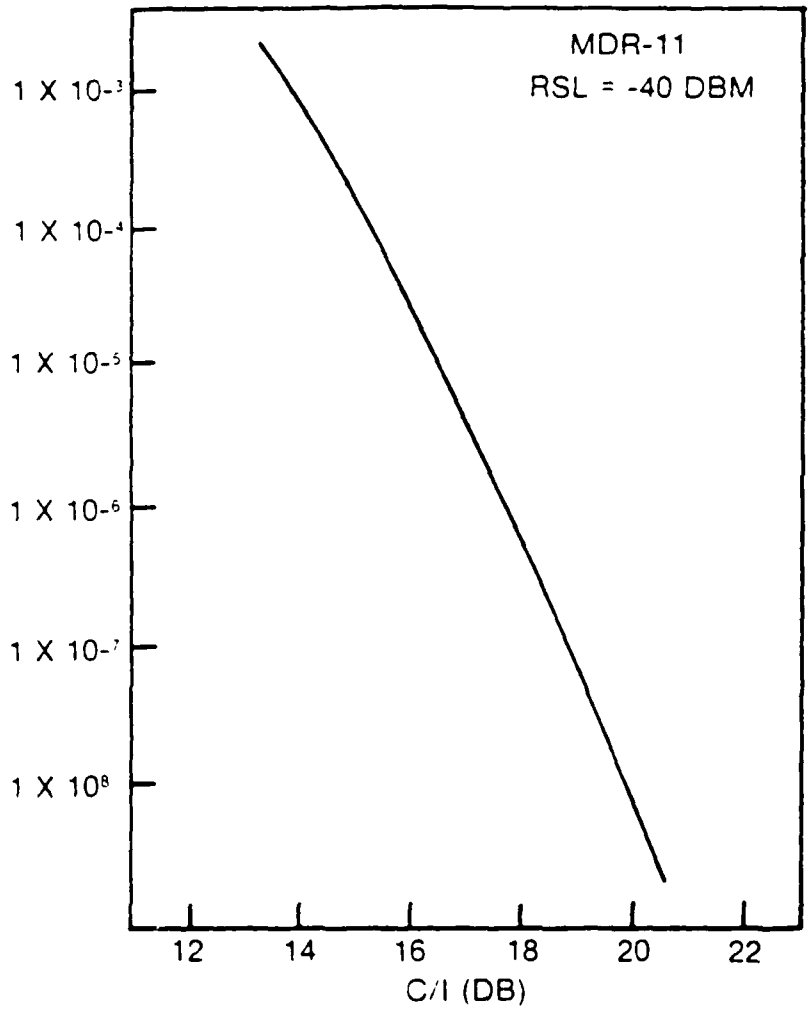

Figure 4-22. Cochannel interference at a high RSL (-40 dBm).

$$C/I = \begin{cases} - \text{[interfering transmitter antenna discrimination] (dB)} \\ - \text{[receiving antenna discrimination] (dB)} \\ + 20 \log \dfrac{\text{desired path length (A)}}{\text{interference path length (B)}} \text{ (dB)} \end{cases}$$

where

B is the distance from the interfering source to the receiver antenna.

In order to evaluate the effects of adjacent channel interference on the system BER, experiments on two digital channels were conducted with 40-MHz separations at 11 GHz and 30-MHz separations at 6 GHz. These results are illustrated in figures 4-23 and 4-24. The 11-GHz data indicates that receiver threshold degradations of less than 2 dB result from adjacent channel interference levels that are 15 dB above the desired receive level. At 6 GHz, however, the effects of adjacent channel interference are far more pronounced. The primary reason for these different results in the 6- and 11-GHz radios is in the amount of receiver filtering. At 11 GHz, the receiver selectivity is significantly more narrow than the RF channel; at 6 GHz, the receiver selectivity is wider than the RF channel. In both cases, the receiver IF bandwidth is 35 MHz, due to the need for transmitting spectral components extending from the carrier frequency to the half baud rate frequency, i.e., 15 MHz. Because of these characteristics of the Collins MDR-6, considerable crosspole discrimination is required on the 6-GHz system for satisfactory adjacent channel operation. Recommended frequency planning as it relates to minimum RF channel separation is discussed in more depth in section 5.1.1.

These results are not general. They do, however, indicate the type of problems that may be encountered and the effect receiver characteristics have on adjacent channel interference.

4.1.2.3 Rain Effects on Digital Systems. Rainfall also has an adverse effect on the performance of a digital microwave system, and the effects of rainfall at 11 GHz are illustrated in figure 4-25. At 11 GHz, the geometry of falling raindrops is such that the effect on horizontal polarization is more pronounced than on vertical polarization. Additional attenuation that results on horizontal polarization as a function of rain rate is demonstrated in figure 4-26. Therefore, it is obvious that an advantage is realized by using vertical polarization in areas that have large amounts of rainfall.

Below 11 GHz, the impairment of the path due to rain is much less pronounced if the path under consideration has a reasonable fade margin. For this reason, curves demonstrating the effect of rain below 11 GHz are not provided.

Since the problem of rainfall is greatly decreased below 11 GHz, the hops may be considerably longer. Therefore, the multipath impairments on these paths will be much greater than those on links above 11 GHz.

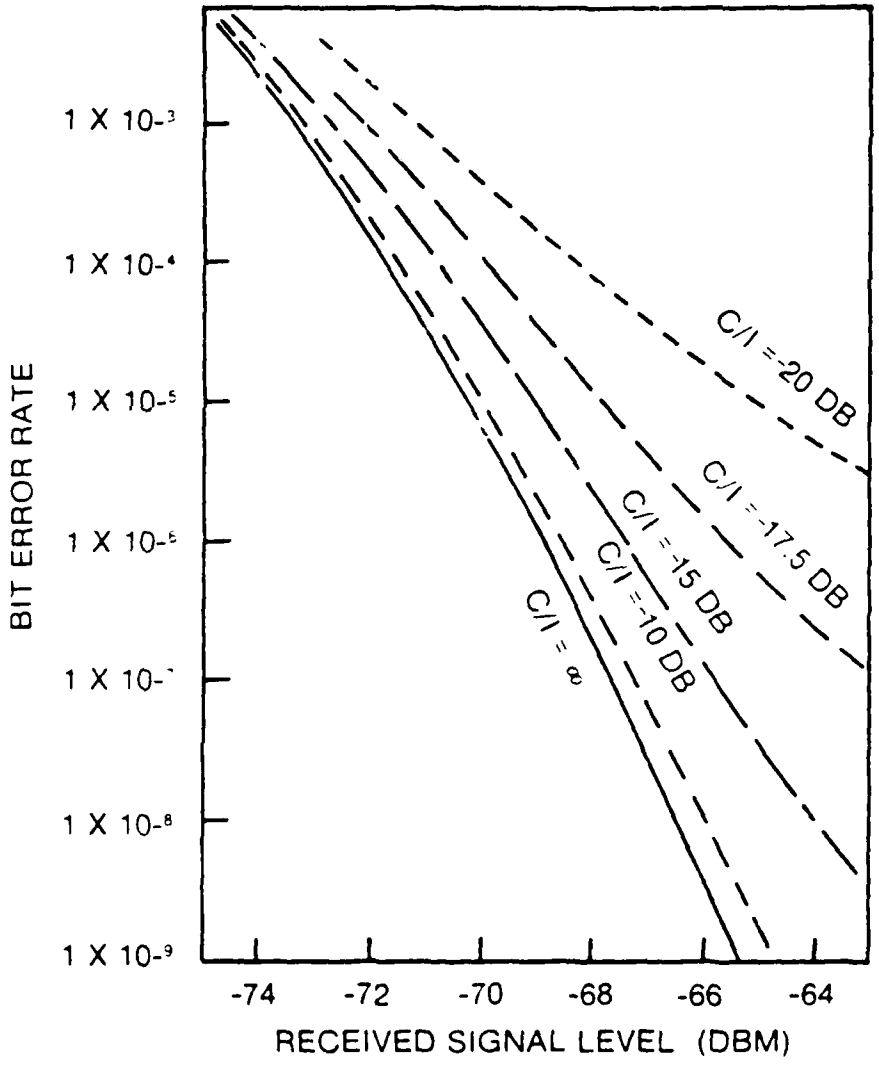

Figure 4-23. Adjacent channel interference, MDR-11 (40-MHz channel separation).

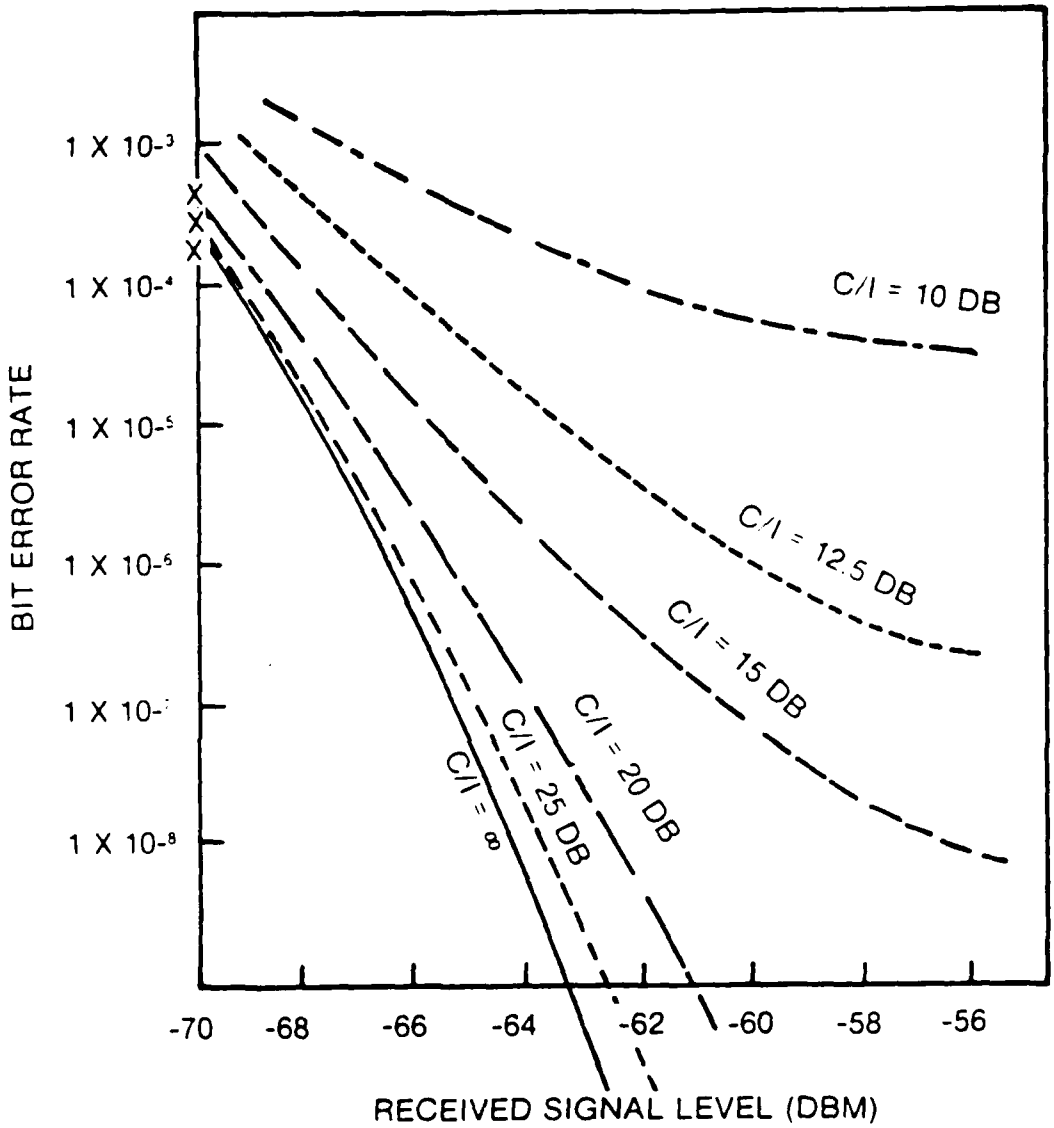

Figure 4-24. Adjacent channel interference, MDR-6 (30-MHz channel separation).

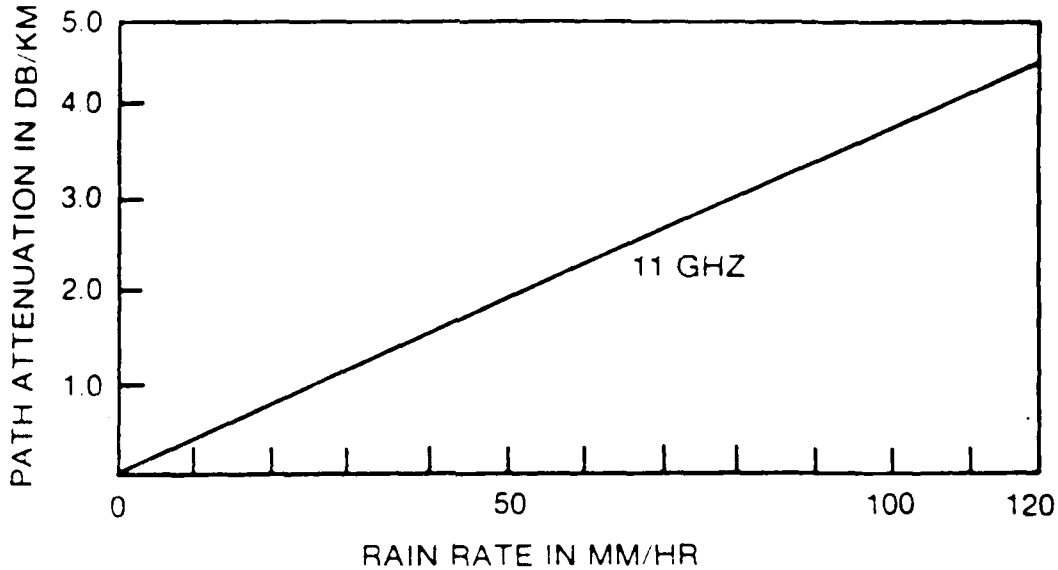

Figure 4-25. Path attenuation of vertical polarization as a function of rain rate.

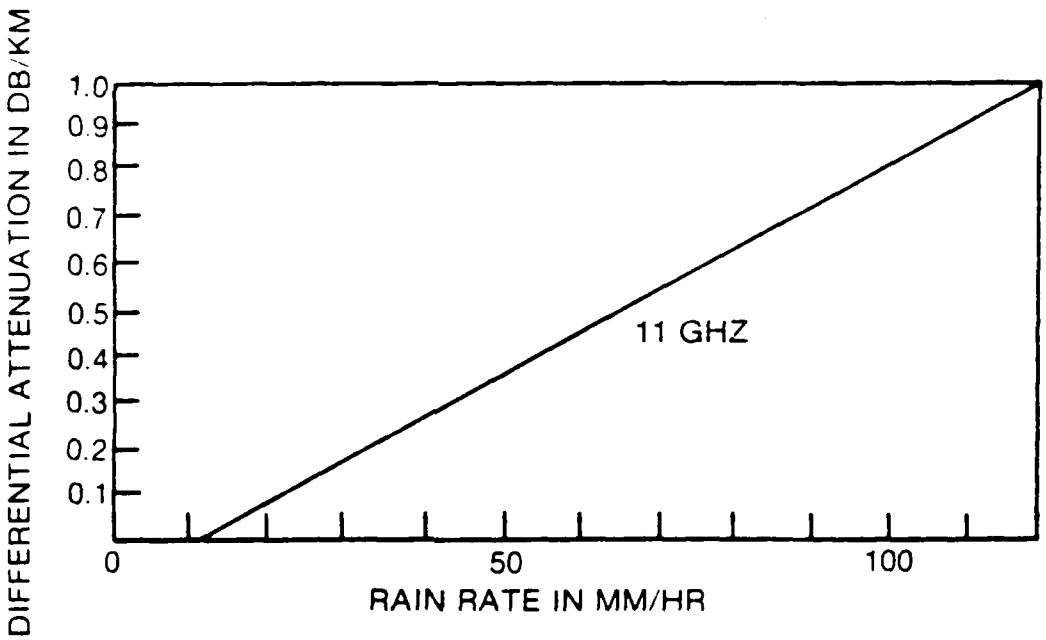

Figure 4-26. Additional attenuation of horizontal over vertical as a function of rain rate.

Typically, on 11-GHz paths the multipath delay is negligible and does not seriously impair the system BER. However, if the multipath delay does become longer (i.e., greater than 1 bit interval), the effects on BER will begin to resemble those of cochannel interference.

4.1.3 Path Profiles and Analysis. After a preliminary site selection process has taken place, the systems engineer must determine the relative elevation of the terrain and any obstacles which may lie in the path. While final path profiles cannot be completed until completion of the field survey phase, initial path profiles may be performed based on various topographic maps and up-to-date aeronautical photographs.

The purpose of this section is to provide an outline of the considerations involved in planning the desired path based on the site and terrain characteristics, as well as propagation fundamentals and adverse atmospheric and weather effects. Three subsections are provided to demonstrate the path analysis/path design phase of a system:

a. K-factor considerations.

b. Fresnel clearance criteria.

c. Reflection coefficients.

4.1.3.1 K-Factor Considerations. An important factor in plotting a path profile is the equivalent Earth radius factor, K. Due to the curvature of the Earth and the slight bending of a microwave beam due to atmospheric refraction, this factor must be used in the plotting of the path. This is because the bending of the microwave beam due to atmospheric refraction is less than the actual curvature of the Earth. When the actual Earth radius, R, is multiplied by K, a radius of a fictitious Earth curvature is derived. This curve will then be equivalent to the relative curvature of the microwave beam with respect to that of the Earth. The curvature for various values of K may be computed from

$$h = \frac{d_1 d_2}{1.5K}$$

where

h = the change in vertical distance between antennas from a horizontal reference line, in feet,

d_1 = the distance from a point to one end of the path, in miles,

d_2 = the distance from the same point to the other end of the path, in miles, and

K = the equivalent Earth radius factor.

Common forms of this equation for typical values of K are as follows:

$$h(K = \infty) = 0$$

$$h(K = 4/3) = \frac{d_1 d_2}{2}$$

$$h(K = 2/3) = d_1 d_2$$

$$h(K = 1) = 0.67 d_1 d_2$$

It should be noted that the condition in which K equals infinity represents the point where the beam has a curvature identical to that of the Earth, that is, a straight line path parallel to the Earth. This, however, is not normally the case, and the curvature is more on the order of 4/3 under normal atmospheric conditions.

Figure 4-27 illustrates the various K factors as they relate to the propagation of the microwave beam. A K-factor of 4/3 means the radius of curvature of the path is 4 times the radius of the Earth.

As previously described, under abnormal conditions the atmosphere may reverse, a layer of less dense air may be below more dense air, and the microwave beam may be refracted upward, causing Earth bulge. This Earth bulge phenomenon, called temperature inversion, in extreme cases may cause an upward curvature of up to twice that of the Earth radius. In this case, the K-factor would be 2/3.

Figure 4-28 illustrates the earth curvature for various values of K, while figure 4-29 graphically illustrates the equivalent Earth curvature correction factor. K-factors may also change depending upon the atmospheric conditions at various times of the day. As discussed in section 4.1.1, these variations greatly affect the performance of the path in terms of multipath fading, Fresnel zone clearance, and reflection point calculations. The large variations of the atmosphere from path to path require a knowledge of the meteorological conditions before the path profile can be accurately plotted. Of interest to the systems engineer are three values of the K-factor:

a. Minimum value to be expected that will determine the degree of Earth bulge.

b. Maximum value to be expected leading to greater than normal clearance (of significant importance in highly reflective terrain).

c. Normal value to be expected that should give sufficient clearance to provide free space propagation on nonreflective paths.

Of these three values, however, only the normal or average K-factor value can be predicted with any accuracy from the meteorological data available. From

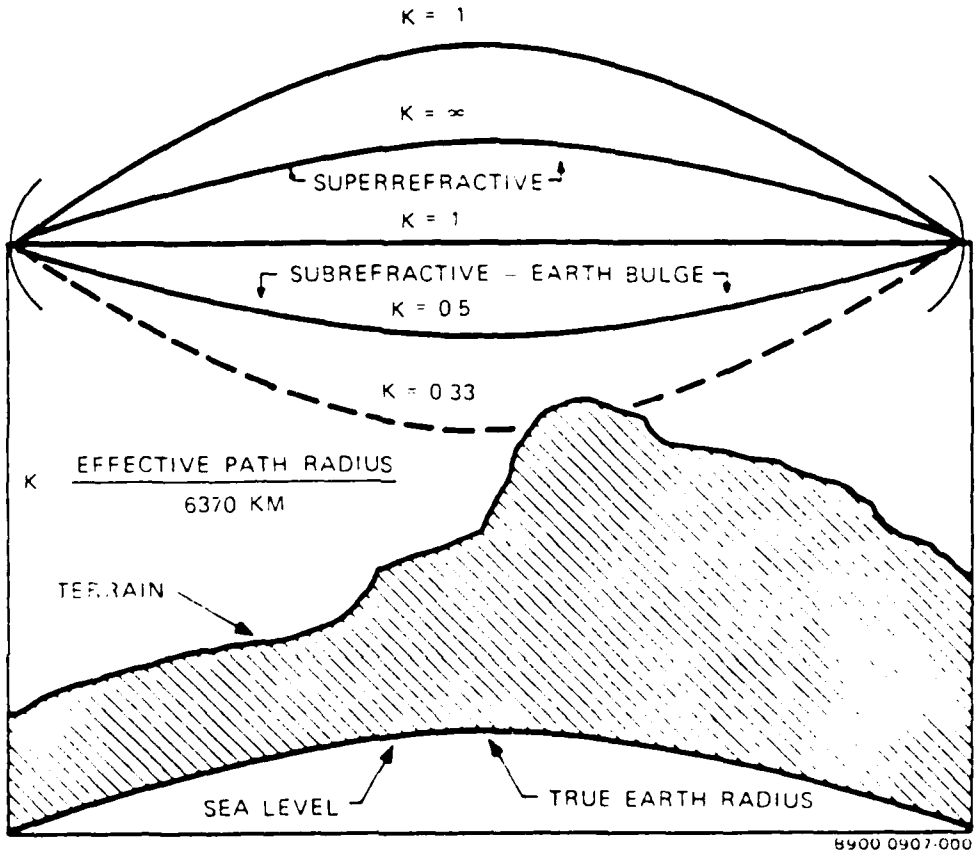

Figure 4-27. Microwave path profile illustrating K-factor effects.

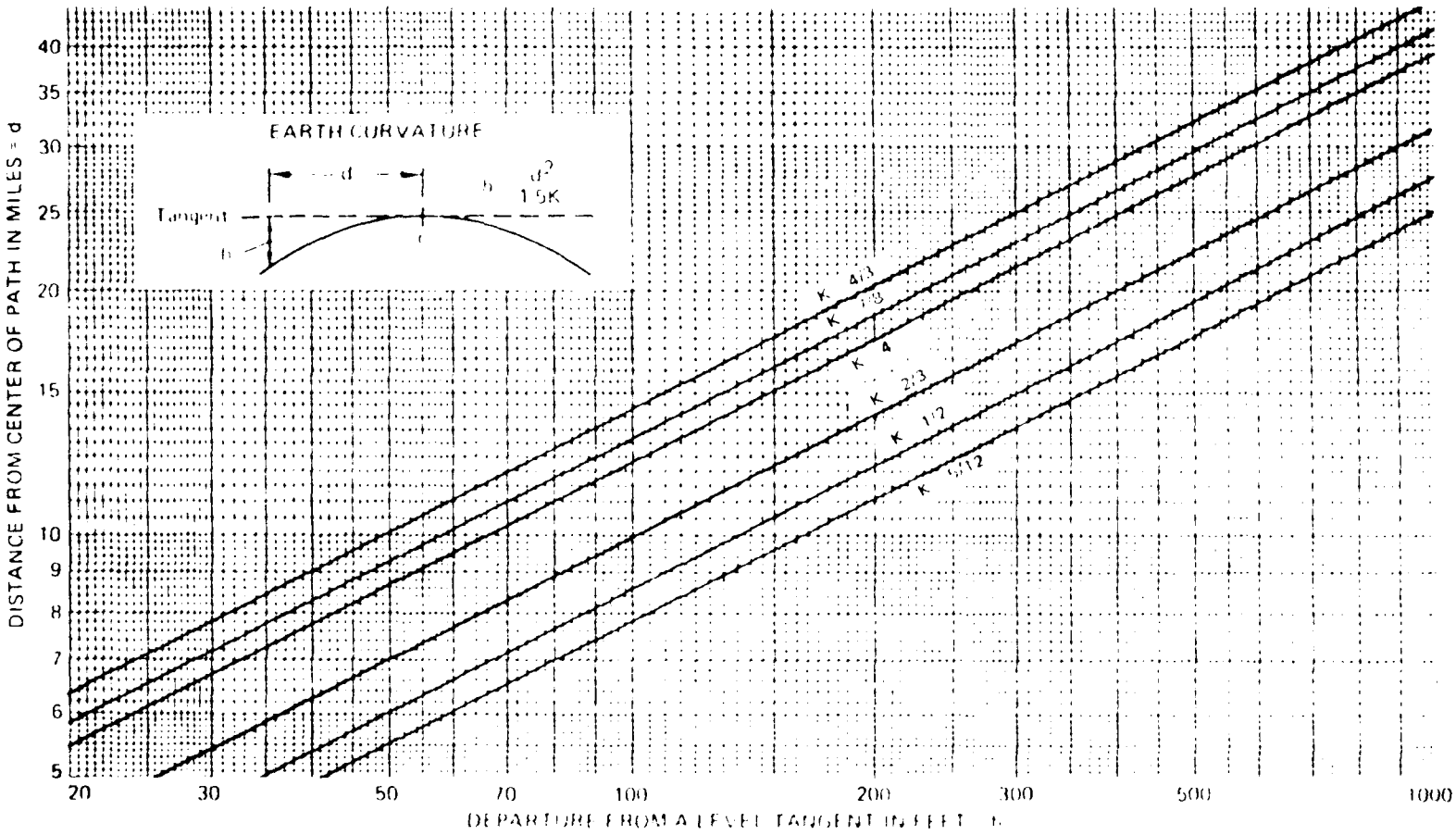

Figure 4-28. Earth curvature for various values of K.

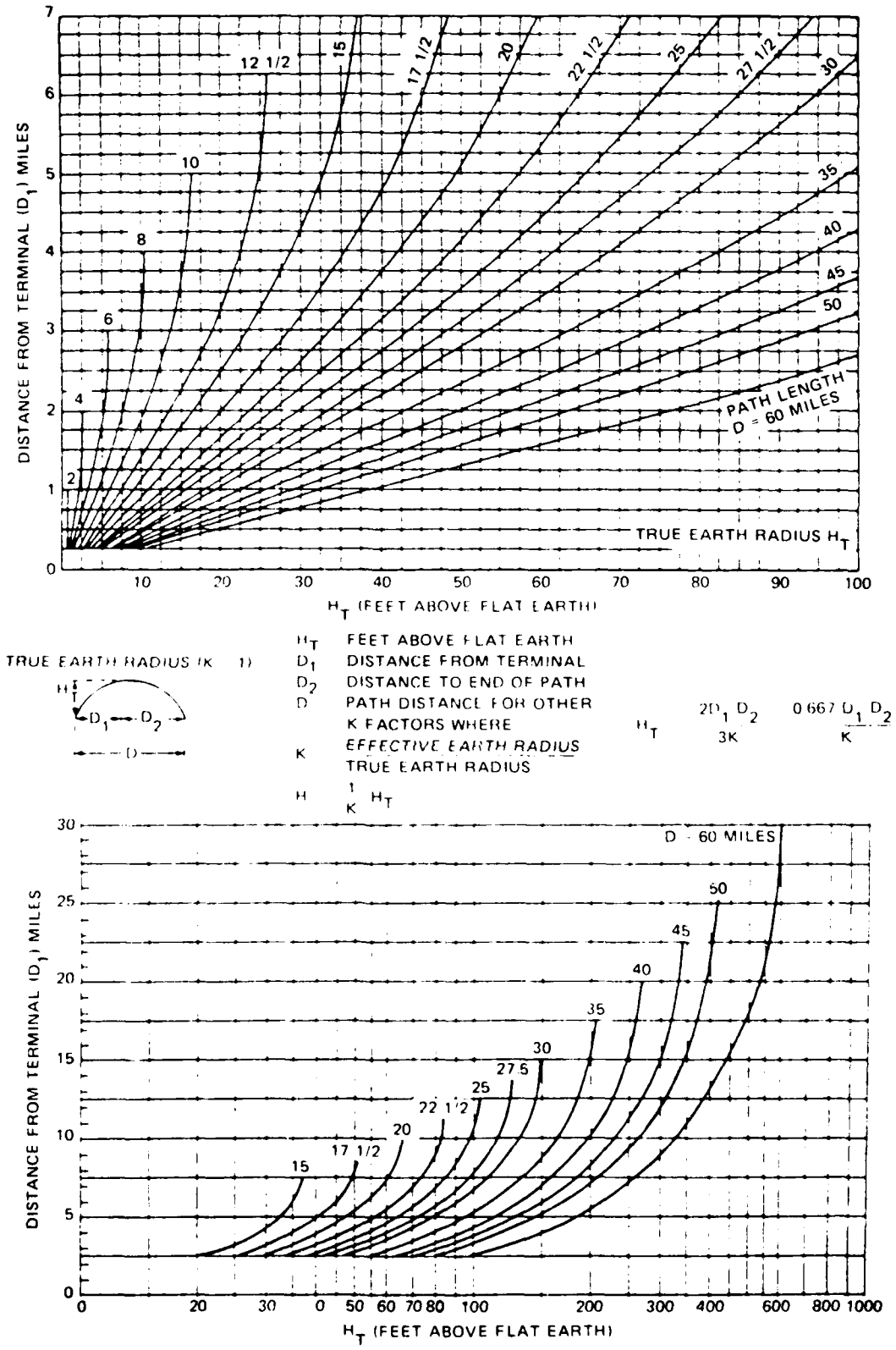

Figure 4-29. Earth curvature correction.

this data, a figure called the linear gradient of refractive index (dn/dh) can be formed for a given area. Using this figure, the K-factor can be determined from the following equation:

$$K = \frac{1}{+\frac{a}{n}\left(\frac{dn}{dh}\right)}$$

where

a = true radius of Earth,

n = radio refractive index (approximately 1.0003), and

$\frac{dn}{dh}$ = gradient of n with respect to height h.

It is usually easier to use the radio refractivity figure, N, instead of n in the above equation. N may be computed as indicated in section 4.1.1.1. Using N, the above expression for K becomes:

$$K = \frac{157}{157 + dN/dh}$$

4.1.3.2 Fresnel Clearance Criteria. As described in section 4.1.1.3, the nth Fresnel zone radius is given by equation

$$F_n = 72.1 \sqrt{\frac{nd_1 d_2}{fD}}$$

or

$$F_n = F_1 \sqrt{n}$$

where

F_1 = first Fresnel zone radius,

F_n = n^{th} Fresnel zone radius,

d_1 = distance from one end of path to the point of consideration, in miles,

d_2 = distance from other end of path to the point of consideration, in miles, and

f = frequency in GHz.

While Fresnel zone clearance is considered an engineering judgment, typically a 0.6 clearance of the first Fresnel zone is considered adequate. Figure 4-30 is a nomograph that graphically demonstrates the relationship of n, d_1, and D with respect to frequency.

4.1.3.3 Reflection Coefficients. Section 4.1.1 alluded to the undesirable effects of reflective paths. When K equals infinity, the relationship between antenna heights and the path distance is given to be

$$d_1 = nD$$

where

$$n = \frac{h_1}{h_1 + h_2}$$

where

h_1 = elevation of lower antenna (feet above reflective surface),

h_2 = elevation of higher antenna (feet above reflective surface),

d_1 = distance in miles from h_1 to the reflective point, and

$D = d_1 + d_2$ = the total path length.

However, in most cases, K cannot be assumed to be infinity and is on the order of 2/3 to 4/3. For K = 2/3 the following equation holds true:

$$\frac{h_1}{d_1} - d_1 = \frac{h_2}{d_2} - d_2$$

For K = 4/3 the following may be used:

$$\frac{h_1}{d_1} - \frac{d_1}{2} = \frac{h_2}{d_2} - \frac{d_2}{2}$$

Figure 4-31 is a nomograph illustrating the reflective point as a function of path distance (D) and antenna heights h_1 and h_2.

LOCATE PATH LENGTH ON P SCALE (20). LOCATE DISTANCE TO OBSTRUCTION ON THE A SCALE CURVE (5). WHERE THEY INTERSECT, DROP VERTICAL LINE TO FREQUENCY (6.2 GHZ) FROM THE INTERSECTION OF THE VERTICAL LINE AND FREQUENCY LINE READ CLEARANCE ON D SCALE (33.5)

TO CALCULATE THE DESIRED FRESNEL ZONE RADII FOR THE POINTS AND FREQUENCIES UNDER CONSIDERATION USING THE FOLLOWING FORMULAS

$$F_1 = \frac{72}{\sqrt{f_{GHZ}}} = \sqrt{\frac{d(D-d)}{D}}, \quad F_n = \sqrt{n}\ F_1$$

WHERE
F_1 IS THE RADIUS OF THE FIRST FRESNEL ZONE IN FEET
f_{GHZ} IS THE FREQUENCY UNDER CONSIDERATION IN GIGAHERTZ (10^9 HZ)
d IS THE DISTANCE N MILES FROM ONE END OF THE PATH TO THE POINT UNDER CONSIDERATION
D IS THE TOTAL PATH LENGTH IN MILES
F IS THE RADIUS OF THE nth FRESNEL ZONE IN FEET
F
n IS THE ORDER OF THE FRESNEL ZONE AND CAN BE ANY POSITIVE NUMBER
NOTE THAT THE FRESNEL RADII ARE MEASURED FROM THE PATH LINE

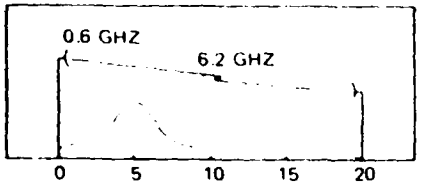

NOTE
FOR FREQUENCIES BELOW 6.2 MHZ, USE THE CHART AT THE RIGHT TO DETERMINE THE 0.6 FIRST FRESNEL ZONE CLEARANCE AT 6.2 GHZ, AND MULTIPLY BY THE PROVEN CORRECTION FACTOR FROM THE TABLE BELOW

FREQUENCY	CORRECTION FACTOR
1.9 GHZ	1.8
2.1 GHZ	1.7
2.5 GHZ	1.6
4.0 GHZ	1.3
4.7 GHZ	1.2

$$F_2 = \frac{\sqrt{6.2}}{\sqrt{f_2}}\ F_1$$

WHERE F_2 = 0.6 FRESNEL ZONE CLEARANCE AT FREQUENCY f_2
f_2 NEW FREQUENCY IN GHZ
F_1 0.6 FRESNEL ZONE CLEARANCE AT 6.2 MHZ

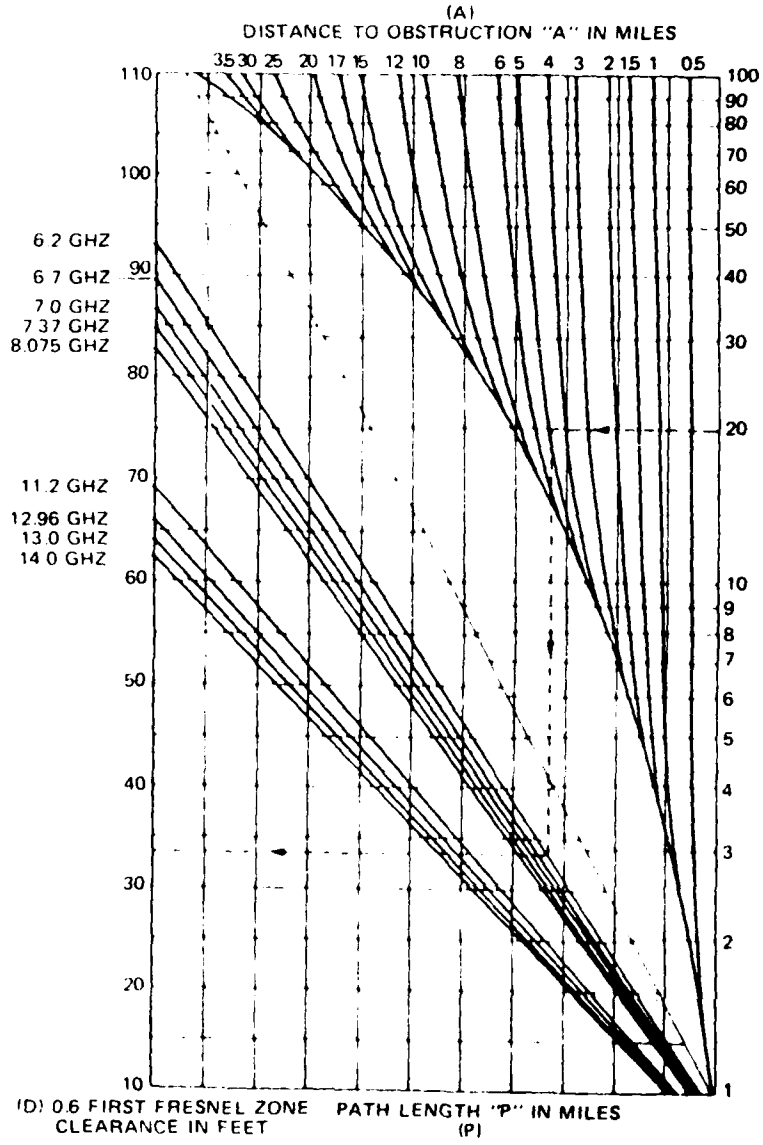

Figure 4-30. Nomogram for 0.6 first Fresnel zone clearance.

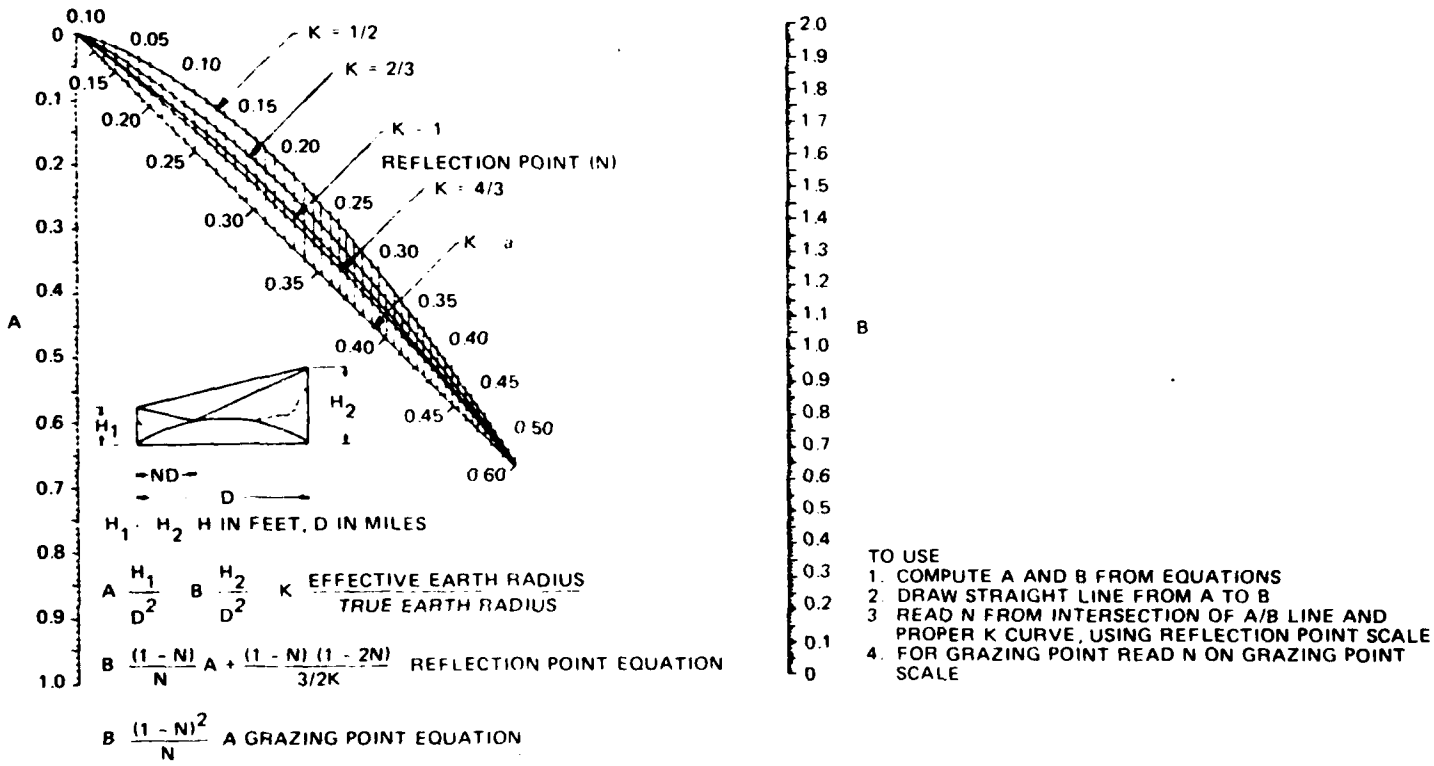

Figure 4-31. Reflection point nomograph.

5.0 SYSTEM SPECIFICATIONS

Performance and support factors are covered in some detail. The analyses specifically are applicable to Rockwell-Collins equipment.

5.1 Frequency Bands Available for Government Services. Frequency bands available for Government services are shown in table 5-1. The following is a discussion of design considerations that enter into meeting the requirements for specific operating frequencies.

TABLE 5-1

MICROWAVE BANDS AVAILABLE FOR FEDERAL GOVERNMENT SERVICES WITHIN THE U.S.A.

Band Name	Range GHz	Center Freq GHz	Att'n at dB at 1.0 Mile
2 GHz	1.71 - 1.85	1.780	101.6
	2.20 - 2.29	2.245	103.6
4 GHz	4.40 - 5.00	4.700	110.0
7-8 GHz	7.125 - 8.40	7.750	114.4
14 GHz	14.40 - 15.25	14.825	120.0

7.25 - 7.30 GHz reserved for Satellite-to-Earth.
7.975 - 8.025 GHz reserved for Earth-to-Satellite.

5.1.1 Frequency Planning/Growth Considerations. The need arises in any microwave communication system to allocate specific operating frequencies and provide coordination between existing and proposed systems. The purpose of this subsection is to provide some concept to the considerations involved in the initial choice of operating frequencies so both intersystem and intrasystem interference mechanisms are minimized and optimal system performance is achieved.

No generally accepted frequency plan exists in the band from 7.125 to 8.5 GHz (for the MDR-8-5N). However, the following guidelines and recommendations for frequency allocations of 20-MHz RF channels should be considered:

a. Avoidance of 2A-B products.

b. Adequate frequency separation.

c. Antenna configurations/polarization.

d. Optimal growth pattern considerations.

5.1.1.1 Avoidance of 2A-B Products. The 2A-B product signal occurs when transmitters and receivers are on the same waveguide stack. This unwanted signal is defined as:

2 (channel A frequency) - channel B frequency

Third-order distortion products of form 2A-B can arise in waveguide branching systems from two primary sources:

a. Nonlinearities inherent within ferrite branching circulators.

b. Inadequate waveguide joints.

The effect of these products is to place transmit signals within the receive band that are fixed in amplitude and, therefore, have the potential of degrading receiver threshold. In severe cases, these products also have the potential of capturing the receiver AGC. Since the precise magnitude of the products is difficult to predict, avoidance of these products is accomplished through frequency selection and antenna configurations.

The guidelines for frequency selection should also be based on the fact that frequencies in the outer half of each band do not produce 2A-B combinations that fall within the receiver passbands of outer receivers in the other half of the band. The net effect of these constraints is that 2A-B products can be avoided entirely only by using the outer frequencies in each half of the band in single antenna systems or by using separate transmit and receive antennas. Therefore, separate transmit/receive antennas are recommended for fully expanded systems. The generation of 2A-B products is illustrated in figure 5-1.

5.1.1.2 Frequency Separation. Frequency separation becomes a major concern to the systems engineer especially in frequency diversity systems. (See figure 5-2.) In these cases, it is most desirable to provide as much frequency separation as possible between the two transmitted frequencies on a given path. General guidelines for the MDR-8-5N radio are as follows:

a. Place all transmitters on a given path in either the upper or lower half of the band, while placing all receivers in the other half.

b. Transmitters that are on the same polarization should be separated 40 MHz.

c. Transmitters that are cross-polarized should be separated 20 MHz.

d. The minimum separation of transmitters and receivers should be 80 MHz.

5.1.1.3 Antenna Configuration/Polarization. With respect to the system antenna configuration, two options are available when considering the frequency diversity and hot standby/power split receive configurations. These options are:

a. Single transmit/receive antenna.

b. Separate transmit and receive antennas.

2A-B PRODUCTS

	POLARIZATION		CHANNEL FREQUENCY MHZ	
	H	V	MHZ	
TX	8'		7080	
		7'	7040	X2 = 14080
	6'		7000	- 7000
		5'	6960	7080
	4'		6920	
		3'	6880	
	2'		6840	
		1'	6800	
RX		8	6740	
	7		6700	
		6	6660	
	5		6620	
		4	6580	
	3		6540	X2 = 13080
		2	6500	- 6500
	1		6420	6580

Figure 5-1. Example of 2A-B products utilizing full growth stacking to 8 RF channels (MDR-6).

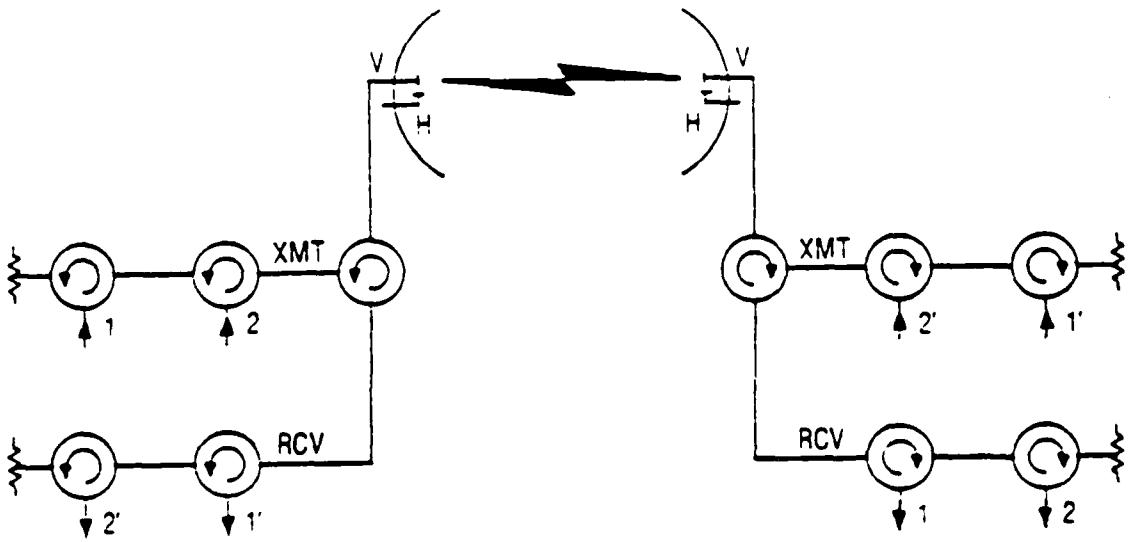

Figure 5-2. Standard configuration frequency diversity.

When considering the hot standby space diversity configuration, the only antenna configuration used is the separate transmit and receive antenna scheme.

In the event full growth of a digital system is anticipated, separate transmit and receive antennas should be used. Full growth plans for the MDR-() series radio are discussed in the following section.

5.1.1.4 Optimal Growth Pattern Considerations. In the process of growth for full expansion, it is desirable but not mandatory to maintain optimal stacking. Optimal stacking here refers to the process of equalizing the path loss of all radios on a given path by stacking so that the transmitter closest to the antenna in the branching system is received by the receiver farthest from the antenna in the receive branching system. Figure 5-2 illustrates a standard configuration frequency diversity system, while figures 5-3 and 5-4 display a usable technique for ultimate growth to a two-antenna system having five channels on the vertical polarization. Figure 5-3 displays four channels on a single antenna. This arrangement could have been accomplished by initially establishing a frequency diversity system, then growing to a second and a third working channel. Figure 5-4 displays the new arrangement at the time the fifth working channel is installed. The waveguide for the receive stack enters the last circulator in the chain. Therefore, the minor losses for the circulators and the networks are equalized, and the first transmitter on is the last receiver off at the next station.

Figures 5-5 and 5-6 depict a growth pattern for full route expansion. With a single antenna used for up to eight channels, figure 5-5 depicts growth from figure 5-3. At the time that growth stages 5 through 8 are added, they are placed on the horizontal polarization on this same antenna. Then, when the system grows to stages 9 through 11, the system is easily converted to transmit and receive dual-antenna configuration. At that time, the receive stacking configuration is reversed so that the circulator and combining networks are equalized for their losses. Note that figure 5-6 is for the MDR-11 (11 RF channels). However, similar growth patterns to eight RF channels are applicable for the MDR-8.

5.2 Diversity Considerations. The factors that contribute to LOS propagation reliability, along with various diversity methods used to minimize the fading, are discussed in this section. LOS propagation reliability is a function of many characteristics associated with the path. Because of the excessive cost that accompanies a path outage, the requirements for availability of circuits across a microwave path are on the order of 99.99 percent (approximately 53 minutes outage per year). Table 5-2 relates outage and system reliability on a time basis. Emphasis on path reliability is initially placed on clearance provisions of the LOS path. These clearance provisions are associated with the Fresnel zone considerations, as discussed in section 4.1.3.

Although clearance may be adequate along the path, meteorological mechanisms such as fog, rain, or temperature inversion may at times totally obliterate the path and create outage. In some instances, simple diversity techniques may be used in order to minimize outages; in other cases, path length may have to be reduced or highly sophisticated diversity techniques may be required to reduce path outage to an acceptable level.

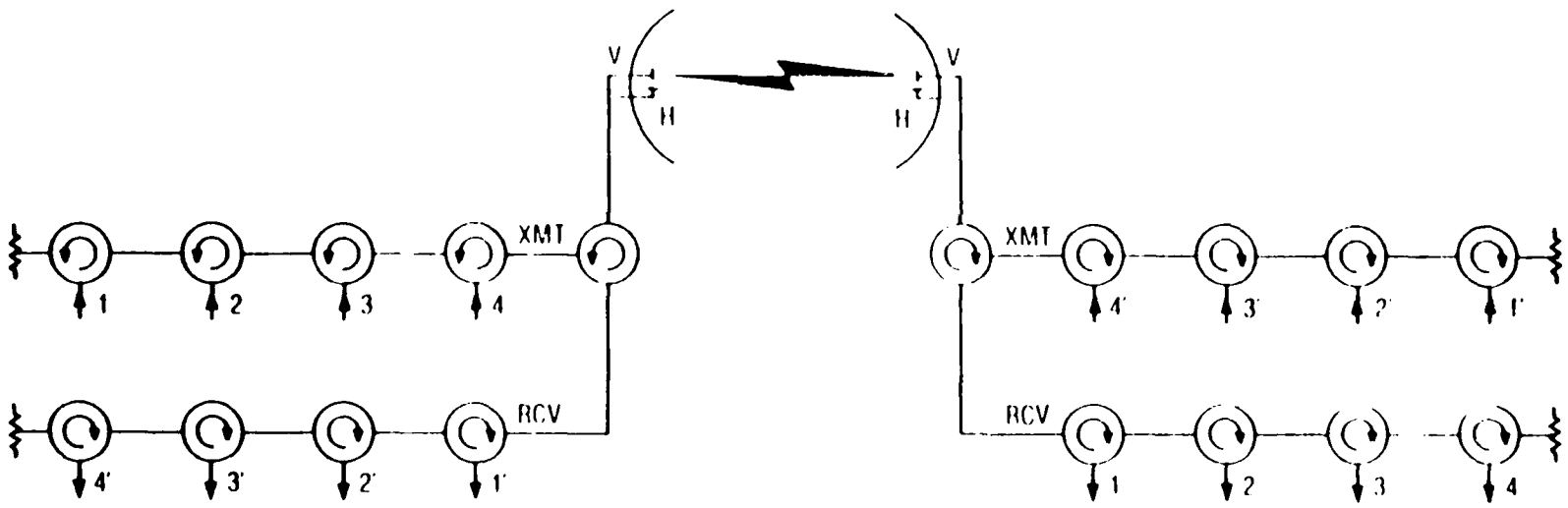

Figure 5-3. Expansion of figure 5-2 to four channels on a single antenna.

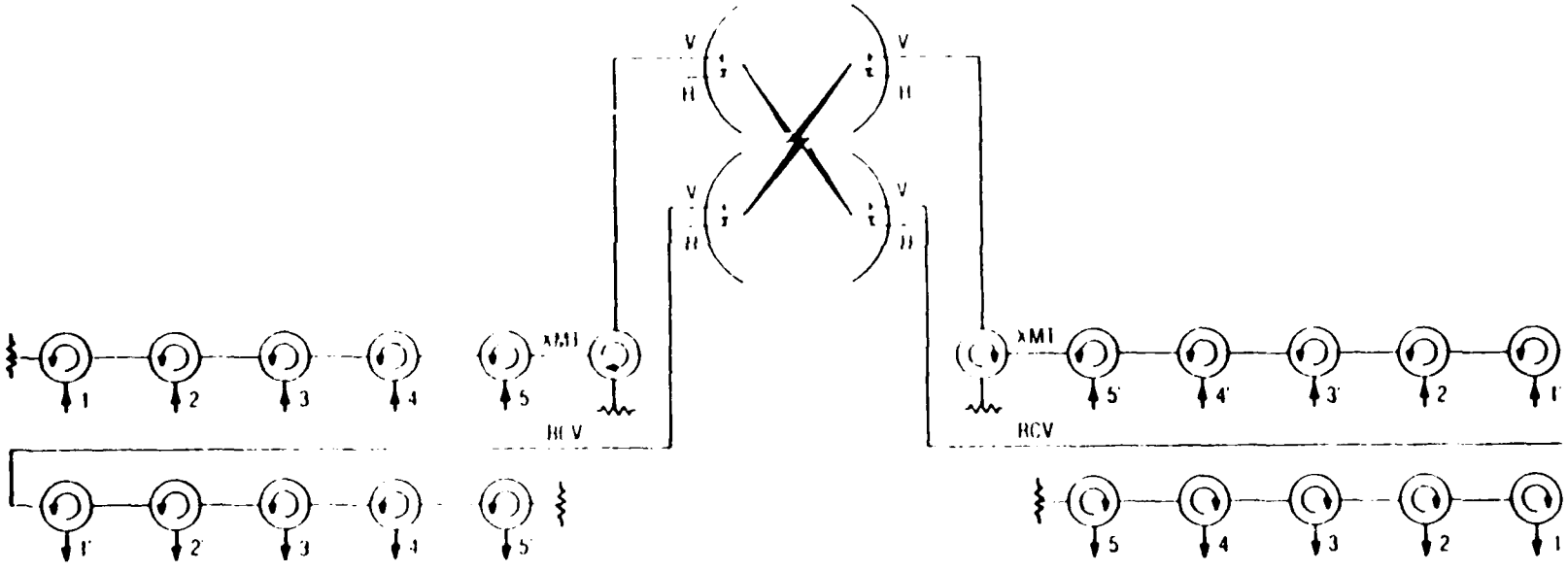

Figure 5-4. Dual antenna conversion with growth from four channels to five.

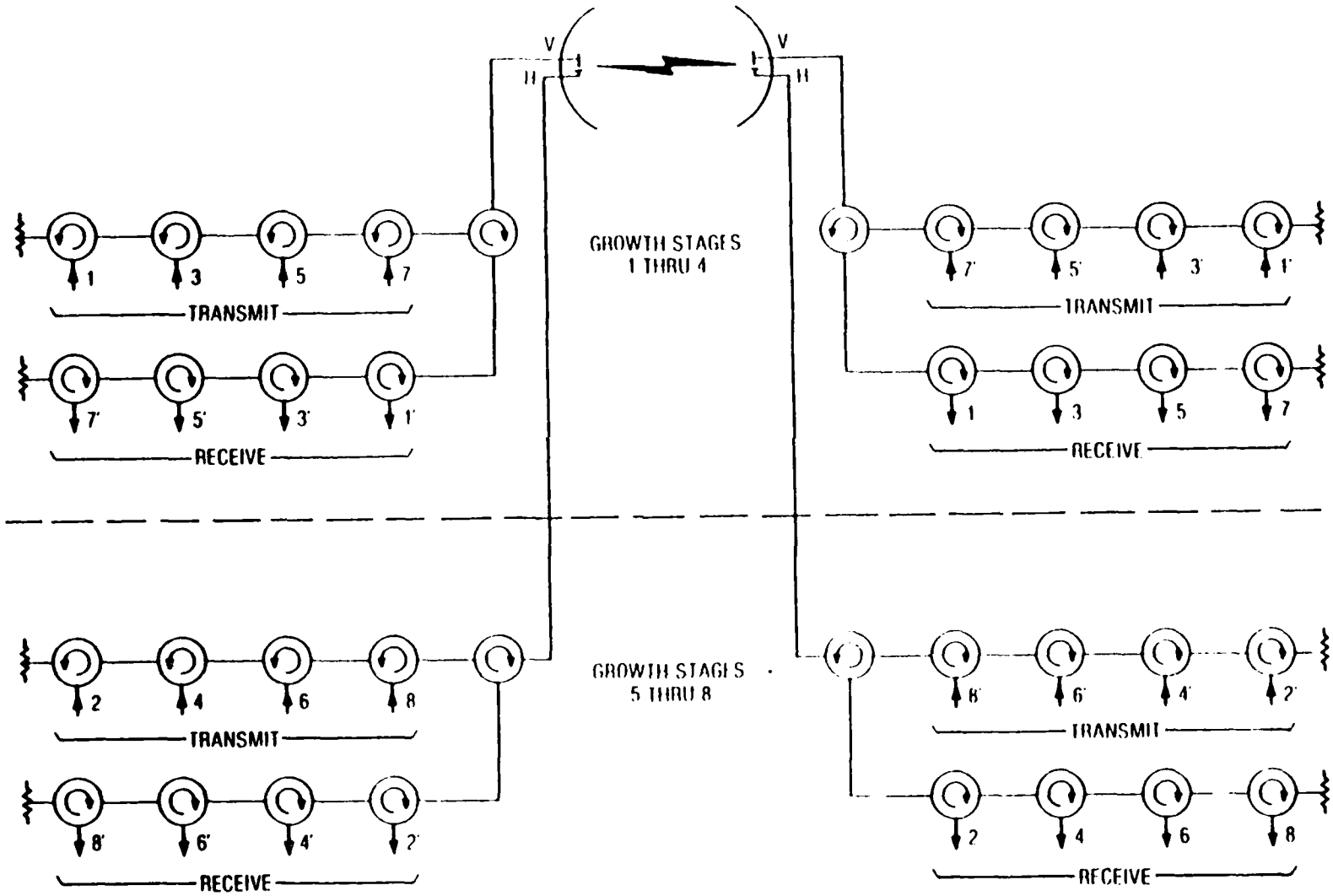

Figure 5-5. Growth of figure 5-3 from four to eight RF channels (utilizing single antenna).

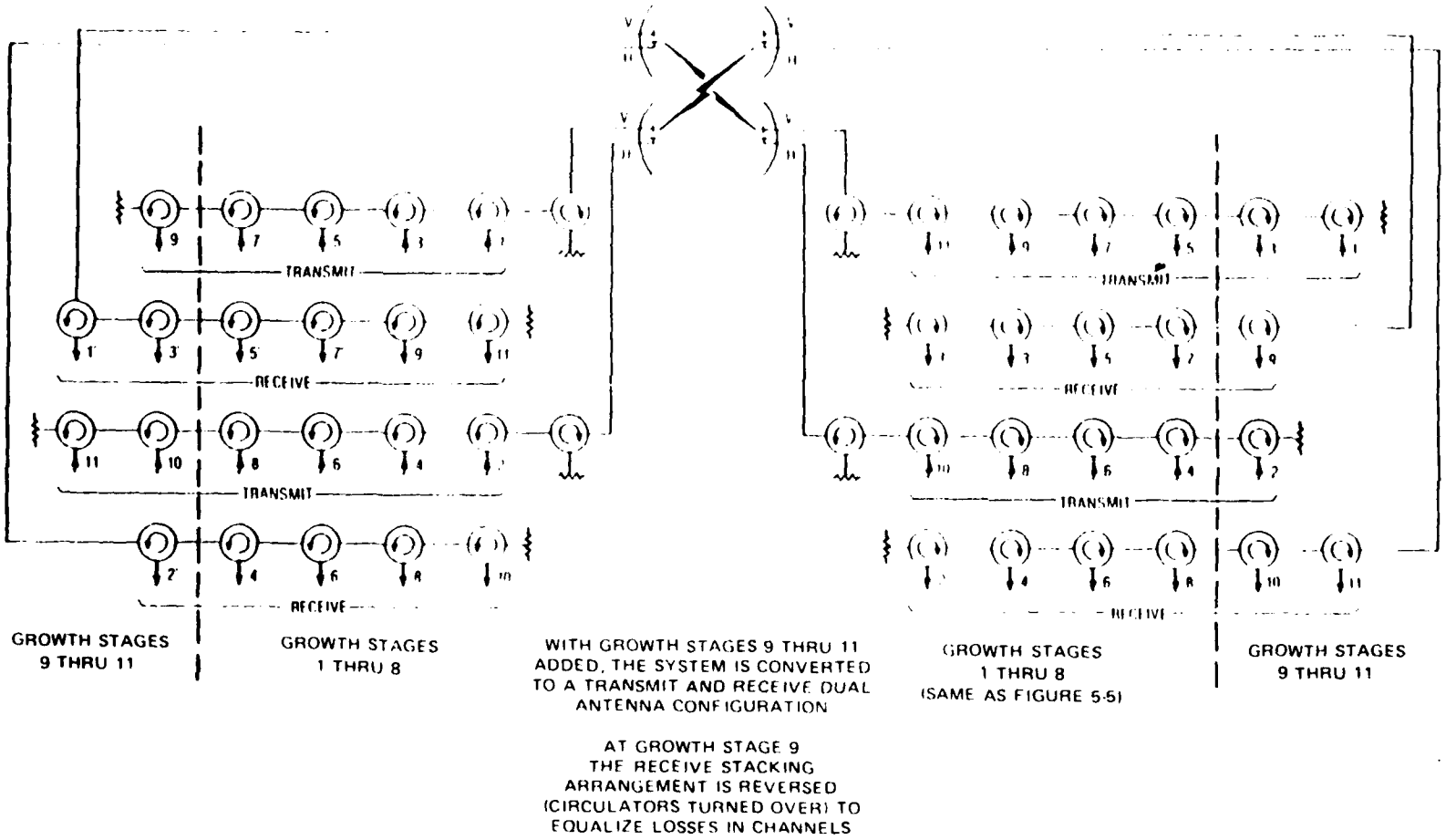

Figure 5-6. Growth to 11 RF channels (for MDR-11 only).

TABLE 5-2

RELATIONSHIP BETWEEN SYSTEM RELIABILITY AND OUTAGE TIME

Reliability (percent)	Percent	Outage Time Year	Month (avg)	Day (avg)
0	100	8760 hr	720 hr	24 hr
50	50	4380 hr	360 hr	12 hr
80	20	1752 hr	144 hr	4.8 hr
90	10	876 hr	72 hr	2.4 hr
95	5	438 hr	36 hr	1.2 hr
98	2	175 hr	14 hr	29 min
99	1	88 hr	7 hr	14.4 min
99.9	0.1	8.8 hr	43 min	1.44 min
99.99	0.01	53 min	4.3 min	8.6 s
99.999	0.001	5.3 min	26 s	0.86 s
99.9999	0.0001	32 s	2.6 s	0.086 s

Path reliability encompasses only a portion of the factors that lead to overall system reliability. In practice, both propagation and hardware reliabilities contribute equally to total communications circuit reliability. Hardware reliability and its role in overall system performance are discussed in depth in section 3.3

This subsection briefly relates to path reliability the fading mechanisms discussed in section 4.1.1 and provides equations useful in calculating outage time. Also discussed are the numerous methods of providing propagation diversity and the improvements gained by using the more common diversity techniques.

Various types of fading mechanisms (e.g., multipath, rain, and fog) that lead to path outage may be classified as either normal or abnormal types of fades. Normal fading refers to fades that affect the path quite frequently and are usually predictable. Abnormal fading refers to fades that occur quite infrequently and are usually unpredictable. Table 5-3 categorizes the various types of fades.

Each of these fading mechanisms must be considered when computing path reliability. Any of the multipath type fading mechanisms can cause complete cancellation of the microwave signal. For example, if two equal signal components travel paths having a difference of 1/2 wavelength, they will arrive at the receiving antenna 180° out of phase and cancel each other. In the case of an 8-GHz radio, the wavelength is approximately 1.5 inches. Therefore, a 0.75-inch difference in the path length of two equal signal components makes the difference between a usable signal and one that cancels itself out.

5.2.1 Propagation Reliability Fundamentals. Three important contributions have been made in the area of propagation reliability as it relates to all types of fading. These contributions are the works of three men: Rayleigh, W. T. Barnett, and A. Vigants.

TABLE 5-3

CATEGORIES OF FADE

Normal Fading	Abnormal Fading
1. Scintillating type atmospheric multipath	1. Subrefraction or superrefraction (K-type fading)
2. Terrain-Reflected Multipath	2. Atmospheric-Reflected Multipath (ducting)
3. Atmospheric Absorption	3. Rain Attenuation
4. Fog Absorption	
5. Dust Absorption	

Lord Rayleigh, in his experimental work on sound, showed that random phase cancellations occur in a predictable manner and follow the relationship illustrated in figure 5-7. The mathematical expression for the Rayleigh Fade Probability is

$$P = 10^{-F/10}$$

where

P = percent of time level is exceeded and

F = fade margin (in dB).

As shown in the curve, fades of 35 dB or more may be expected 0.02 percent of the time. In the course of a year, this amounts to approximately 1 hour and 45 minutes. This estimate is on the conservative side and in common practice should not be used. This is where the work of W. T. Barnett and A. Vigants becomes useful. Their work relates the theoretical findings of Rayleigh to the real world so accurate propagation reliability may be determined.

The work of W. T. Barnett is divided into two parts. His first work included methods of calculating the circuit outage due to fading on nondiversity paths. This fading was based on the terrain, climate, path length, and fade margin. His second work provided equations necessary for calculating the effective improvement achieved by using frequency diversity as a function of the frequency band and frequency spacing. Vigants' work derives necessary equations for calculating the improvement achieved by vertical space diversity as a function of the antenna spacing in feet, the frequency, and the path length. Barnett's equation describing path outage is

$$Up = a \times b \times 2.5 \times 10^{-6} \times f \times D^3 \times 10^{-F/10}$$

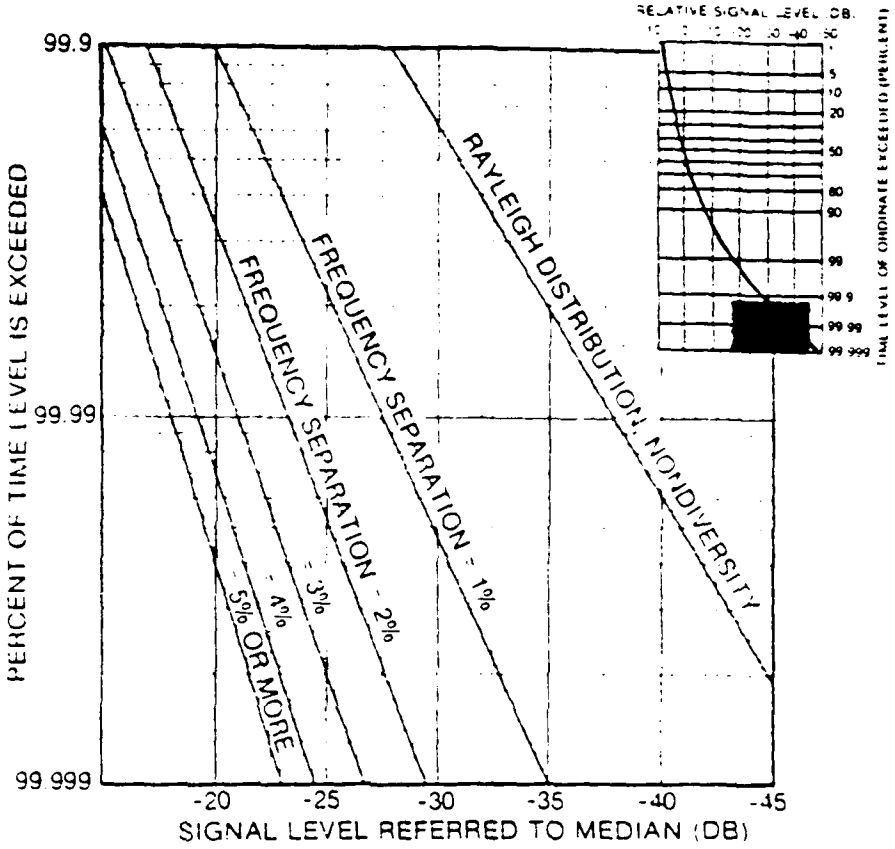

Figure 5-7. Expanded section shows frequency diversity improvement for various frequency spacings -- Rayleigh distribution curve (inset).

where

Up = unavailability of propagation;

a = terrain variable,

= 4.0 for very smooth terrain or over water,

= 1.0 for average terrain with some roughness,

= 0.25 for mountainous regions that are very rough or very dry;

b = climate variable,

= 0.50 for hot, humid areas,

= 0.25 for normal interior regions,

= 0.125 for mountainous or very dry regions;

f = frequency in GHz;

D = path length in miles; and

F = fade margin in dB.

Overall reliability of a microwave link would then be given by

$$R = 100A$$

where

$$A = 1-(Up_E + Up_W)$$

and

R = reliability expressed as a percentage,

A = link unavailability,

Up_E = link unavailability in the east direction,

Up_W = link unavailability in the west direction,

and "East" - "West" are designators for opposite path directions for each microwave path.

If only one hop is being analyzed, then A = 1 - Up, where Up is given by Barnett's equation describing path outage.

Example:

A path is proposed for over the water in a low-lying, humid climate. The path distance is 35 miles, while the proposed fade margin is 40 dB at an operating frequency of 7.939 GHz.

a. Find the link unavailability factor Up.

b. Find the link availability A.

c. Find the reliability factor as a percentage.

d. Find the total outage time per month.

Solution:

a. $Up = a \times b \times 2.5 \times 10^{-6} \times f \times D^3 \times 10^{-F/10}$

$= (4.0)(0.50)\ 2.5 \times 10^{-6}(7.939)(35)^3(10^{-40/10})$

$= 1.70192 \times 10^{-4}$

b. $A = (1 - Up) = 1-(1.70192 \times 10^{-4}) = 0.99983$

c. Reliability = 100A = 99.983 percent

d. *Outage per month (from table 5-2):*

One month = 720 hours = 43,200 minutes

Therefore,

$(1 - 0.99983)(43200) = 7.344$ minutes

Another important point should be made with respect to multipath fading. Its potential for causing errors is dependent upon two factors:

a. Total outage time.

b. Number of discrete fades or "hits."

This implies that a path with a number of hits of short periods of time will suffer worse circuit degradation than a path with one outage period for an amount of time equal to the sum of outage time associated with the short "hits."

5.2.2 Diversity Fundamentals. Diversity protection, therefore, may be desirable even if it is not warranted by the total time reliability objectives. Each path must be analyzed for diversity on an individual basis with respect to terrain, climatic, and other factors.

There are a number of diversity techniques in existence, with only a few being widely used. The following is a comprehensive list of diversity techniques generally accepted in LOS microwave systems:

a. Frequency (both single antenna and dual antenna or hybrid).

b. Space.

c. Angle.

d. Polarization.

e. Route.

The discussions with respect to the MDR-() radio encompass the first two types of diversity techniques only.

5.2.2.1 Frequency Diversity. The frequency diversity arrangement previously illustrated in figure 3-41 provides full equipment redundancy with two separate and independent paths from source to sink. Furthermore, it may be configured in either a single or dual antenna configuration. These configurations are sometimes referred to as standard frequency diversity and hybrid diversity, respectively. The primary disadvantage of this arrangement is that it doubles the frequency spectrum usage.

For all practical purposes, the refraction or reflection of all microwave signals will be essentially the same, regardless of frequency. Therefore, if two signals are emitted from one antenna, they will arrive at the receiving antenna at identical times regardless of the frequency separation between them.

If two microwave signals are of different frequencies, they also possess different wavelengths and therefore cannot fade at identical times if they travel the same path. This frequency selective fading mechanism is what allows frequency diversity to effectively improve the path reliability.

Barnett provided the equation for calculating the improvement gained by using frequency diversity. The diversity improvement factor, whether it be for frequency or space diversity, is defined as the ratio of fractional outage of the nondiversity signal to that of the diversity signal.

$$I_{FD} = K\,(\Delta f/f) \times 10^{(F/10)}$$

where

I_{FD} = improvement gained over nondiversity paths by using frequency diversity,

Δf = difference in transmitting frequency in GHz,

f = center frequency in band in GHz,

F = fade margin in dB, and

$$K = \begin{cases} 1/2 \text{ at } 4 \text{ GHz}, \\ 1/4 \text{ at } 6 \text{ GHz}, \end{cases} \text{based on experimental data}$$

$$\begin{cases} = 1/8 \text{ at } 8 \text{ GHz}, \\ = 1/12 \text{ at } 11 \text{ GHz}. \end{cases} \text{approximation only}$$

Using this improvement factor, I_{FD}, the path outage with diversity becomes

$$U_{FD} = Up/I_{FD}$$

In the case of hybrid diversity, the improvement factor essentially becomes I_{SD}, as described in the following paragraphs.

A slight rearrangement of terms in the equation for I_{FD} yields the following form for I_{FD} in dB or the multipath frequency diversity fade margin improvement factor.

$$I_{FD(dB)} = 10 \log K (\Delta f/f) + F$$

where

K, Δf, f, and F are as previously defined.

5.2.2.2 Space Diversity. Vertical space diversity, previously illustrated in figure 3-42, takes advantage of the fact that simultaneous fading is not very likely over two well-separated paths. Two antennas are used at each end of the hop, thereby placing this diversity technique at a disadvantage by virtue of its higher cost. If a single tower is used, it must be stronger than one designed to support one antenna. Furthermore, it must be taller to provide adequate vertical separation. Vigants defined a space diversity improvement factor that equates variables such as antenna spacing, path length, and fade margin to the path reliability:

$$I_{SD} = \frac{7.0 \times 10^{-5} \times fs^2 \times 10^{F/10}}{D}$$

where

f = frequency in GHz,

s = vertical antenna spacing in feet,

D = path length in miles, and

$\bar{F}$ = fade margin associated with the second antenna.

The barred F covers the situation in which the fade margins are different on the two paths. In this case, F is defined as the larger of the two and is used to calculate Up, while $\bar{F}$ is used to calculate the improvement, I_{SD}. The unavailability of the path is then calculated as

$$U_{SD} = \frac{Up}{I_{SD}}$$

The improvement factor, I_{SD}, may also be rewritten as

$$I_{SD(dB)} = 10 \log f + 20 \log s - 10 \log D - 41.55 + \bar{F}$$

where s, D, f, and $\bar{F}$ are identical to the previous definitions. This equation expresses the space diversity improvement factor in terms of dB so the fade margin improvement may be illustrated.

5.2.2.3 Angle Diversity. Angle diversity is used less frequently than frequency or space diversity. This technique makes use of multiple antennas or an antenna with multiple feedhorns. The primary disadvantage of this type of diversity is that its improvement factor is dependent upon isolation of the individual signals. Current antenna design does not allow full improvement of this type of diversity.

5.2.2.4 Polarization Diversity. The polarization diversity technique makes use of a dual polarized feedhorn to isolate two unique microwave beams. The disadvantage of this type of diversity is in the maximum isolation allowable between the two cross-polarized signals. This figure is approximately 30 dB, and it can be degraded to less than 10 dB if severe multipath distortions are encountered.

5.2.2.5 Route Diversity. Route diversity is implemented in situations requiring very high reliability. The technique uses two discrete systems physically separated by distances in excess of 10 km. The route diversity technique is rarely used because of the large expense incurred in duplicating many sites.

5.3 Received Signal Characteristics. The received signal characteristics can be initially determined by path calculations. The purpose of this subsection is to demonstrate the usefulness of path calculation charts as a tool in the design of the overall system. The initial system design may begin early in the planning stages by using estimates of fade margins, antenna gain, etc. However, when the final path propagation fade margins are available, the end-to-end system signal performance can be completed, along with final equipment cost and performance tradeoffs. This analysis takes the form of path calculations in order to properly record and calculate the major factors influencing the end-to-end system

performance. Figure 5-8 demonstrates the losses and gains that take place in the total transmission system. All of the losses shown in this figure, as well as passive repeater contributions (described in subsequent paragraphs) and system noise, are the elements that affect path performance.

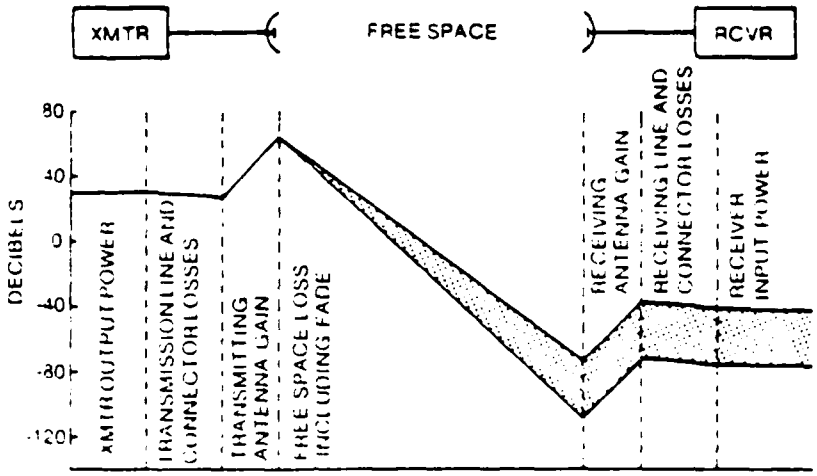

Figure 5-8. Gains and losses across one hop of a microwave radio link.

Demonstration of the path calculation tables is best implemented by an example. Figure 5-9 is an example of path calculations provided for four hops of digital equipment using typical figures based on past experience. The path calculations have been computed for a system with the following equipment and characteristics. All stations are equipped with four common items:

a. Either 6-foot or 10-foot Andrew antennas (7.760 to 8.400 GHz) (HP6-77GE and HP10-77GE). The gain of the antenna is located in Andrew Catalog, page 45. The units of measurement (dBi) are decibels of gain over an isotropic antenna.

b. Andrew elliptical waveguide (6.5 to 8.5 GHz) (EW-71). The loss of the waveguide in decibels per 100 meters or 100 feet can be located in Andrew Catalog, page 150 or 151.

c. Andrew standard fiberglass radomes (either the R6E or R10E). The loss of the radome is approximately 0.5 dB for the band of interest. This information if found on page 53 of Andrew Catalog.

d. The MDR-() radios, which possess a nominal power output of 5 watts (+37 dBm).

SYSTEM PATH CALCULATIONS

Type Radio: MDR-8 Type Carrier: GOVT. BAND

RF Frequency Band (MHZ): 7125.00 TO 8500.00 MHz

Receiver IF Bandwidth (MHZ): 20 MHz

Maximum Channel Loading: 672

Calculated Channel "Slot" (KHZ): N/A

Per Channel Deviation (KHZ): N/A
Preemphasis (DB): N/A
Engineer: Phil Jenkins Date: 6 June 1979

	STATIONS			
	SITE A TERMINAL	SITE B REPEATER		SITE C TERMINAL
1. Tower height (M/FT) (meters)	15	30	30	30
2. Antenna Height (M/FT) (meters)	14	28	29	28
3. Antenna Size (M/FT) (feet)	6	6	10	10
4. Antenna Gain (DBi)	40.0	40.0	45.2	45.2
5. Waveguide/Coax (M/FT) (meters)	25.0	25.0	40.0	40.0
6. Waveguide loss (DB) (Elliptical)	1.8	1.8	2.7	2.7
7. Stacking Losses (DB)	2.2	2.2	2.0	2.0
8. Radome Loss (DB)	0.5	0.5	0.5	0.5
9. Other Losses (DB)	1.0	1.0	1.0	1.0
10. Passive Repeater Size (Ft x Ft) Including Angle between Paths	N/A			N/A
11. Passive Repeater Gain (N = Nearfield) (DB)	N/A			N/A
12. Path Length (KM/MI)	20.0/12.43		40.0/24.9	
13. Free Space Loss (DB)...A=96.6+20 log F (GHz)	136.31		142.52	
14. Field Margin (Loss) (DB) +20 log D (Miles)	2.00		2.00	
15. Total Losses (6+7+8+9+13+14)(DB)	144.11		156.92	
16. Total Gains (4 + 11)(DB)	80.00		90.4	
17. Net Path Loss (15 - 16)(DB)	64.11		65.52	
18. Transmitter Output Power (DBM)	37.0		37.0	
19. Normal Received Carrier Power (18 + 17)(DBM)	-27.11		-29.52	
20. Received Carrier Req'd for 1 x 10^{-6} BER	-68.00		-68.00	
21. Fade Margin (19 - 20) (DB)	40.89		38.48	

22. Hop Noise: A. fixed + B. Variable (pWp0)
23. Echo Distortion (pWp0)
24. Coupling/Switch (pWp0)
25. Interference (pWp0)
26. FMT/FMR (pWp0)
27. **Total Fixed (22A + 23 + 24 + 25 + 26) (pWp0)**
28. Hop Intermodulation (pWp0)
29. **Hop Total (22B+27 + 28) (pWp0)**
30. **System/Section Intermodulation Noise (pWp0)**
31. **Total System/Section Noise (22B + 27 +30) (pWp0)**

Figure 5-9. Example path calculations with optional system noise computations (lines 22-31).

Station A terminal has a transmit frequency of 7.778 GHz and a 6-foot Andrew antenna with 25.0 meters of waveguide.

Station C terminal has a transmit frequency of 7.939 GHz and a 10-foot Andrew antenna with 40.0 meters of waveguide.

The information gained from the path calculations can be used to perform system gain calculations for various configurations. System gain was previously defined as

[transmitter power] - [receiver threshold] - [WG branching losses] = system gain.

The transmitter power is the output power of each transmitter as measured at the branching circulator of that transmitter. The receiver threshold for a 1×10^{-6} BER is as follows for the various MDR radios: MDR-6 = -62 dBm, MDR-8 = -70 dBm, and MDR-11 = -68 dBm. This threshold is measured at the input of the branching circulator of each receiver. Waveguide stacking losses consist of circulator losses. (In the case of the power split receive configuration, a 3.0-dB power splitter loss is included.) The circulator loss is 0.3 dB per pass, which refers to the loss incurred going from one port to another. A loss of 0.2 dB is also incurred from filter reflections. Figures 5-10 through 5-12 illustrate the four MDR-8 diversity configurations and the losses which must be considered in computing system gain.

5.4. Antenna Systems. Antenna system design considerations, including the effects of wind and weight, are discussed in this section. An efficient antenna system is a very important part of any LOS microwave system. This is because the low power output and the large propagation losses inherent in LOS systems necessitate use of a highly directional antenna system. The efficiency of an antenna system depends on how much of the RF energy transmitted from one particular antenna will be received by the antenna at the opposite end of the path. Broadcast radio has a low efficiency because it must radiate RF energy uniformly in all directions. Therefore, a very small fraction of the power initially transmitted is collected by the receiving antenna. In contrast to this, the LOS microwave antenna system utilizes very small amounts of power (1 to 5 watts) and concentrates this energy into a highly directional and narrow beam. The receiving antenna must also be directional in order to collect as much of the incoming energy as possible and reject interference from other directions. This highly directive beamwidth of energy is illustrated by figure 5-13.

This directivity, commonly referred to as antenna gain by the systems engineer, is normally designated with respect to an isotropic radiator, or an ideal antenna which radiates power equally in all directions. Antenna gain is defined as the ratio of the maximum radiation intensity in a given direction to the maximum radiation intensity in the same direction from an isotropic radiator. This figure of merit is normally expressed in units referred to as dBi, or decibels relative to an isotropic radiator for a linearity polarized antenna.

The gain figure is usually specified at the mid-band point referenced to the input/output flange at the rear of the antenna. For a direct radiating

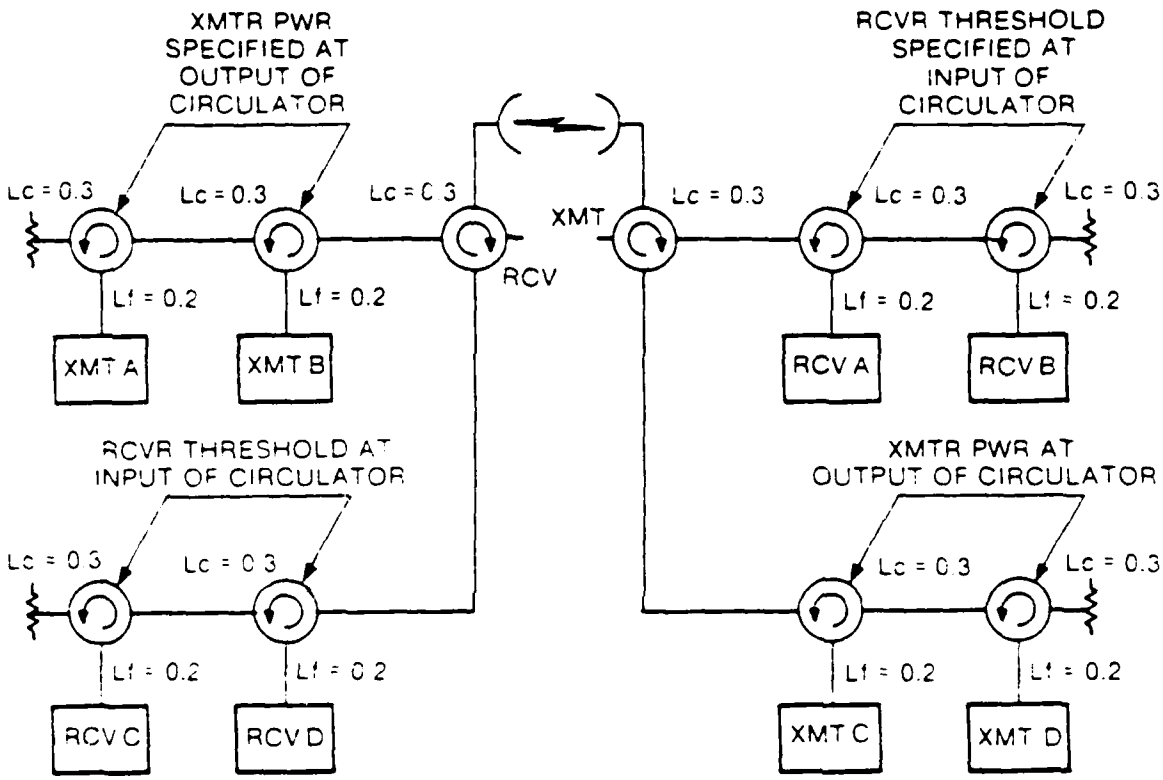

Figure 5-10. MDR-8 system gain considerations -- frequency diversity, single antenna.

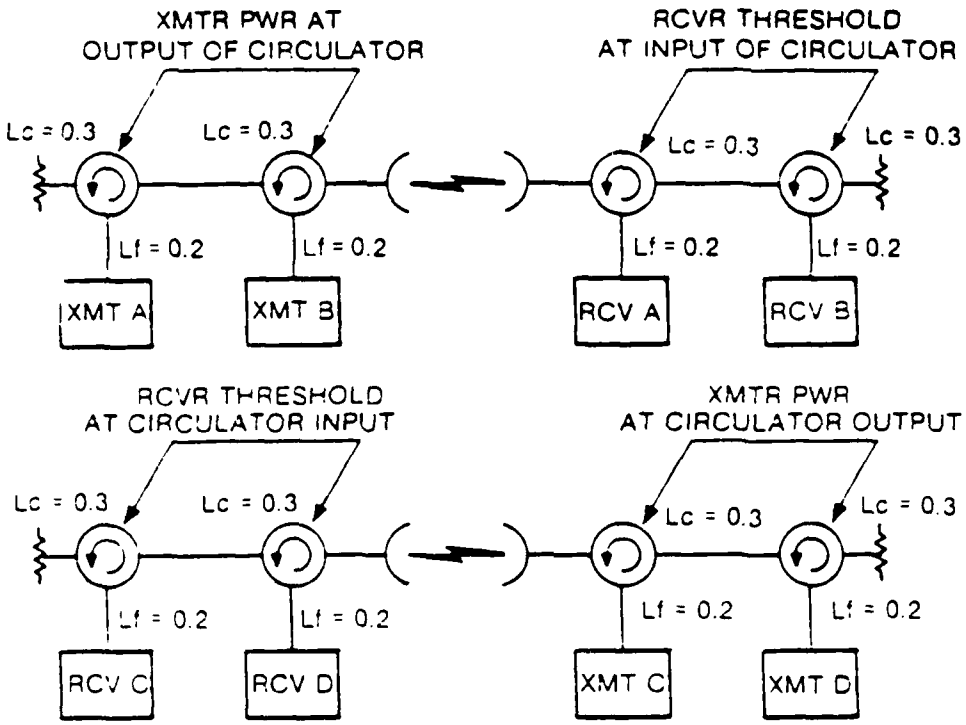

Figure 5-11. MDR-8 system gain considerations -- frequency diversity, dual antenna.

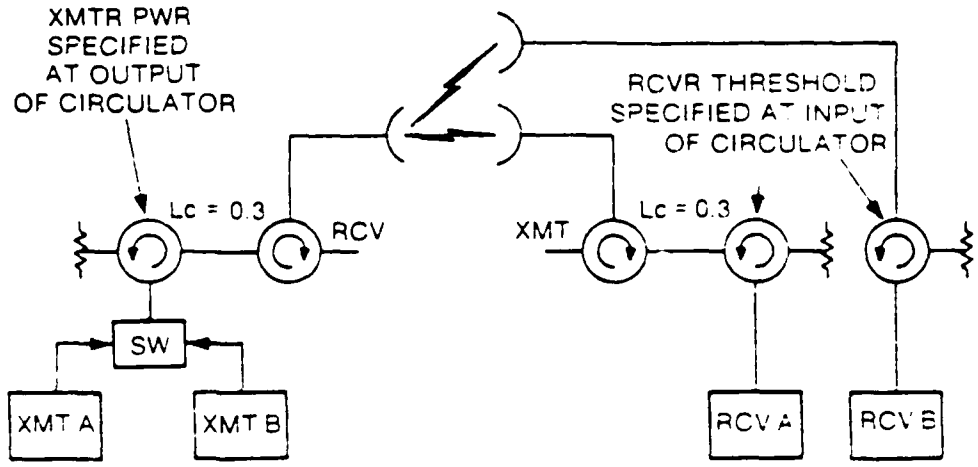

		XMTR POWER	RCVR THRESHOLD	CIRC LOSSES	*SYSTEM GAIN
MDR-8	Low Power	+30 dBm	(-70 dBm)	0.6 dB	99.4
(A Channel)	High Power	+35.5 dBm	(-70 dBm)	0.6 dB	104.9

*Channel B is 0.3 dB higher due to 0.3 dB less circulator loss.

a. Space diversity receive (showing one direction of transmission only).

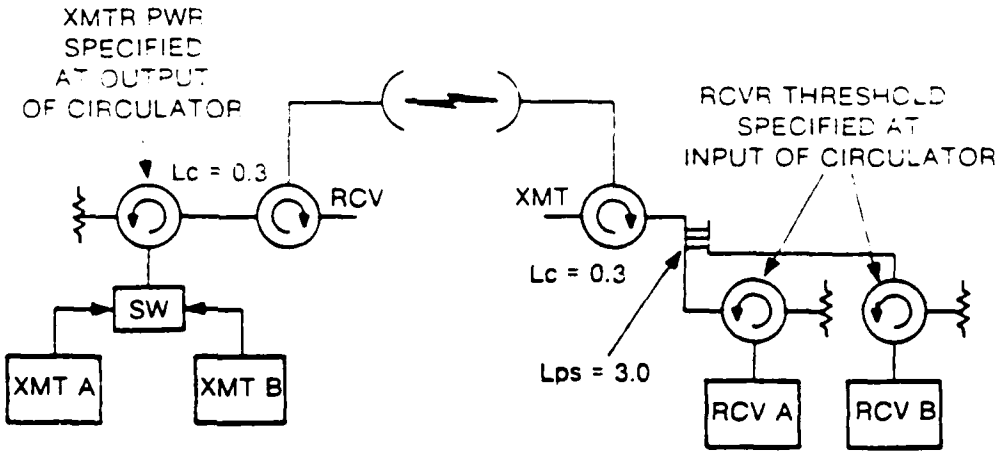

		XMTR POWER	RCVR THRESHOLD	CIRC LOSSES	*SYSTEM GAIN
MDR-8	Low Power	+30 dBm	(-70 dBm)	3.6 dB	96.4
	High Power	+35.5 dBm	(-70 dBm)	3.6 dB	101.9

b. Power split receive (showing one direction of transmission only).

Figure 5-12. MDR-8 system gain considerations.

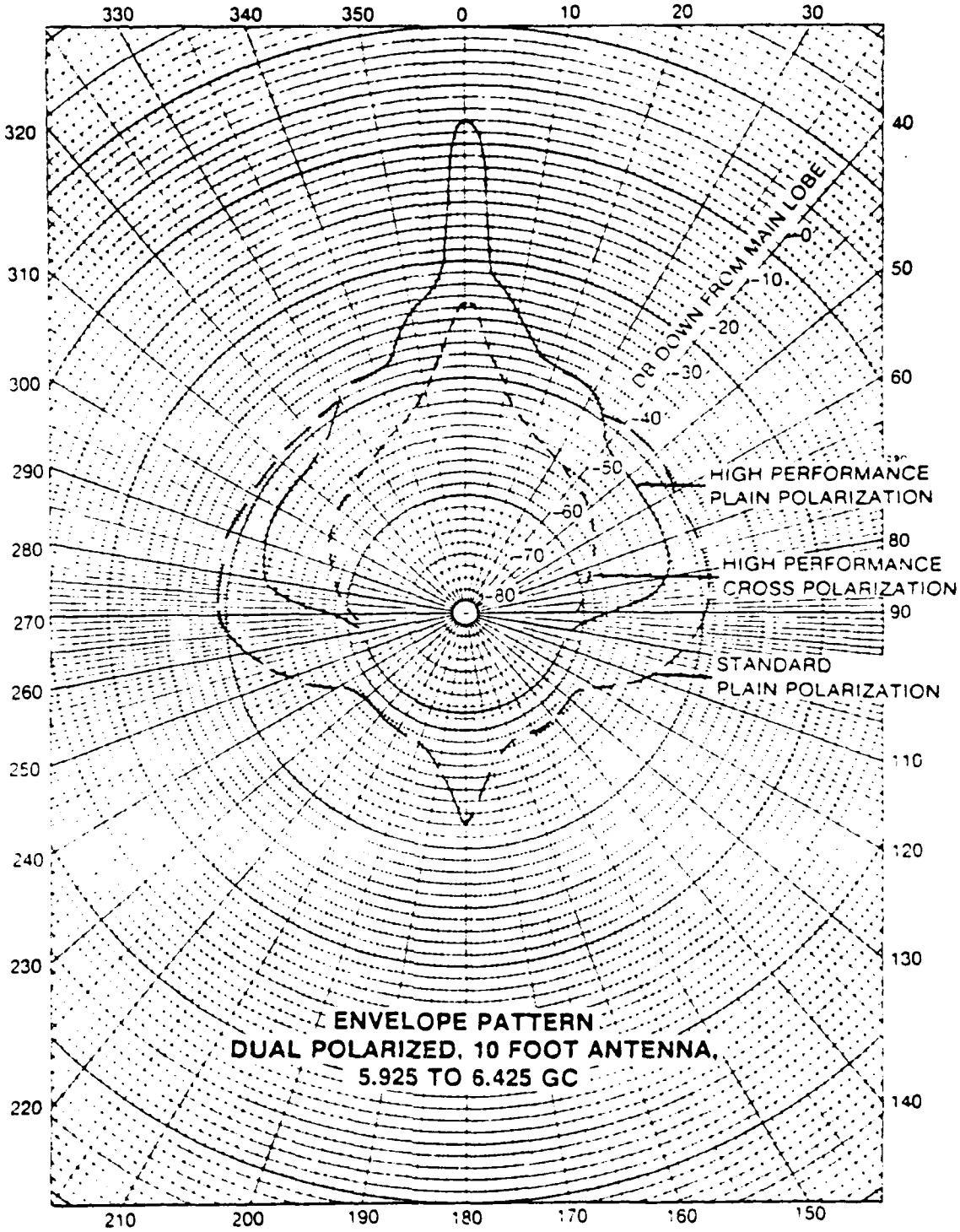

Figure 5-13. Envelope pattern for a dual polarized, 10-foot antenna (5.925 to 6.425 GHz).

parabolic antenna, in common use today, an equation for calculating the gain of a microwave antenna (G) is

$$G = 10 \log k \left(\pi D/\lambda\right)^2$$

where

G = gain over isotropic (dBi),

k = antenna efficiency, typically on the order of 50 to 60 percent,

D = antenna diameter, and

λ = wavelength at operating frequency, in the same units as D.

Another expression for the gain of a parabolic reflection type antenna is given by

$$G = 20 \log D + 20 \log F + 7.5$$

where

G = gain over isotropic (dBi),

D = parabolic reflector diameter in feet, and

F = frequency in GHz.

Typical antenna gains are categorized in table 5-4 as a function of operating frequency and antenna reflector size in feet.

TABLE 5-4

PLANE POLARIZED PARABOLIC ANTENNA GAIN

Diameter (ft)	Gain Relative to Isotropic (dB)						
	2 GHz	4 GHz	6 GHz	7 GHz	8 GHz	11 GHz	13 GHz
4	25.5	-	35.2	35.9	37.0	40.3	41.3
6	29.0	35.0	38.7	39.4	40.6	43.8	44.8
8	31.5	37.3	41.1	41.9	43.1	46.0	47.3
10	33.5	39.3	43.0	43.9	45.2	47.7	48.5
12	-	40.8	44.6	45.5	46.7	-	-
15	-	42.6	46.0	46.9	48.7	-	-

As an example, consider the following. A system will use a plane-polarized parabolic reflector antenna with a 6-foot reflector operating at 7.793 GHz. The antenna efficiency is 59 percent. Calculate the gain in dBi using

$$G = 10 \log k \left(\frac{\pi D}{\lambda}\right)^2$$

First, calculate λ:

$$\lambda(7.793 \text{ GHz}) = \frac{3 \times 10^8 \text{ m/s}}{7.793 \times 10^9 \text{ s}^{-1}} \times 39.7 \frac{\text{in.}}{\text{m}} = 1.53 \text{ in.}$$

The antenna gain, G, then becomes:

$$G = 10 \log 0.59 \left(\frac{\pi(6)(12)}{1.53}\right)^2 = 41.1 \text{ dBi}$$

Since this gain is a result of antenna directivity, it is noteworthy to point out the expression for beamwidth of a parabolic antenna. This expression for the half-power beamwidth is given by

$$\theta = 70/FD$$

where

θ = half-power beamwidth in degrees,

F = frequency in GHz, and

D = antenna reflector diameter in feet.

Another important antenna system parameter is that of polarization. The simplest form of polarization is the single plane type that can be either vertical (V) or horizontal (H). Other types of parabolic refector antennas have dual-polarized feeds (DP) with separate vertical and horizontal connections. Because of the complex feedhorn, DPs have a bit less gain than single polarization types.

The following is a general categorization of antenna systems:

a. Parabolic antennas.

b. High-performance antennas.

c. Cross-band parabolic antennas.

AD-A139 738 DIGITAL MICROWAVE SYSTEM DESIGN GUIDE(U) RANGE COMMANDERS COUNCIL WHITE SANDS MISSILE RANGE NM TELE-COMMUNICATIONS GROUP FEB 84 RCC/TCG-207-84 3/3

UNCLASSIFIED F/G 9/5 NL

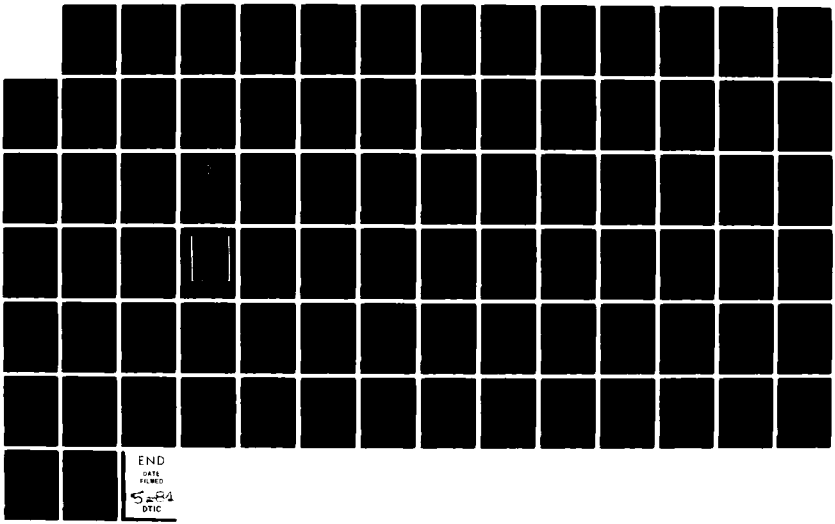

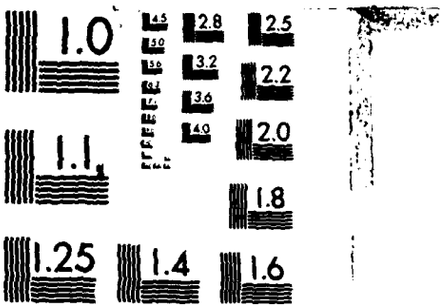

MICROCOPY RESOLUTION TEST CHART
NATIONAL BUREAU OF STANDARDS-1963-A

d. Horn reflector antennas.

e. Periscope antenna systems.

Of these five systems, the first four are direct radiating, while the fifth uses a passive repeater to redirect the beam. Each system is discussed briefly in the following paragraphs.

5.4.1 Parabolic Antennas. This type of antenna, previously discussed in terms of gain, beamwidth and polarization, is configured with a parabolic reflector and a center feed. This type of antenna system yields reasonably good antenna discrimination.* It does leave something to be desired, however, in its front-to-back ratio.** Two main problems arise from use of this type of antenna: the feedhorn structure itself blocks a portion of the microwave beam, and some of the RF energy is reflected back into the feedhorn, which creates distortion and loss of efficiency.

5.4.2 High-Performance Antennas. This type of antenna is similar to the standard parabolic reflector type, except that it possesses a cylindrical shroud around the outside diameter of the dish to help reduce a wide-angle radiation pattern and improve the front-to-back ratio.

5.4.3 Cross-Band Parabolic Antennas. This type of antenna is of a parabolic design with the center feedhorn designed to permit operation in two discrete frequency bands. This type of antenna also possesses a complex feed assembly, resulting in reduced gain efficiency.

5.4.4 Horn Reflector Antennas. The horn reflector (cornucopia) antenna uses a section of a very large parabola, mounted at such an angle that the energy from the feedhorn is simultaneously focused and reflected at right angles. The standard Bell System horn antenna is about the equivalent of a 10-foot parabola insofar as gain is concerned, but it possesses a higher front-to-back ratio (on the order of 70 dB or more). This ratio is sufficient to allow operation in two directions (or more) from a station on the same frequencies.

This antenna is very large, heavy, and complex to mount. The antenna and the tower are also quite expensive. A final disadvantage is that almost no flexibility exists in choice of sizes, although at least one smaller size of horn reflector is currently available.

5.4.5 Periscope Antenna Systems. The periscope antenna system consists of a parabolic radiator at or near building level, which illuminates a reflector at the top of the tower. This eliminates the need to run a waveguide tower to the antenna and is used in cases where long sections of waveguide are undesirable.

**Antenna discrimination is defined as the amount of discrimination the antenna possesses with respect to other interfering signals.*

***Front-to-back ratio is defined as the ratio of power in the main beam to the power scattered to the rear.*

The disadvantages of this type system are in the complexities of antenna gain. The gain of the antenna is a function of the antenna and reflector sizes, the separation between the two, their geometric relationship, and the operating frequency. This type of system, if properly engineered, may yield more gain than the antenna alone. The relative increase in gain is due to the relationship between gain and directivity of the RF energy. Figure 5-14 equates reflector size, antenna size, and distance between the two to the overall efficiency of the system.

Radomes are an important consideration when specifying antenna systems, especially in regions where accumulation of snow, ice, or debris may be a problem. The wind loading reduction considerations of a fiberglass radome may also be of interest to the engineer when configuring the antenna systems. Heated radomes to prevent ice buildup may be desirable, especially in a periscope antenna system that mounts antennas horizontally near ground level. Radome losses may vary from 0.1 dB for unheated, standard types at 2 GHz to over 2 dB in heated, extra-strength radomes operating at 11 GHz.

Wind forces and loading are also an important consideration to the system engineer when planning the antenna system. Two types of forces are of interest: forces produced by the wind and forces produced by antenna weight with and without ice loading.

5.4.6 Wind Forces. Wind forces may be separated into two force components and a twisting moment, as illustrated in figure 5-15. The axial force, F_A, acts along the axis of the antenna, while the side forces, F_S, act perpendicular to the axis of the antenna with their lines of action passing through the vertex of the paraboloid. The twisting moment, M, is a couple which acts in the horizontal plane (the plane of the wind) at the vertex of the reflector. The total moment, M_T, is that exerted on the antenna mounting pipe.

The magnitudes of F_A, F_S, and M depend upon the dynamic pressure of the wind, the projected frontal area of the antenna, and the aerodynamic characteristics of the antenna body. The aerodynamic characteristics vary with wind angle. Therefore, the variation of F_A, F_S, and M may be described by the following coefficients:

$$C_A = F_A/AV^2, \quad C_S = F_S/AV^2, \quad C_M = M/DAV^2$$

where

C = the coefficient,

A = the frontal area in square feet,

V = the wind velocity in mph, and

D = the antenna diameter in feet.

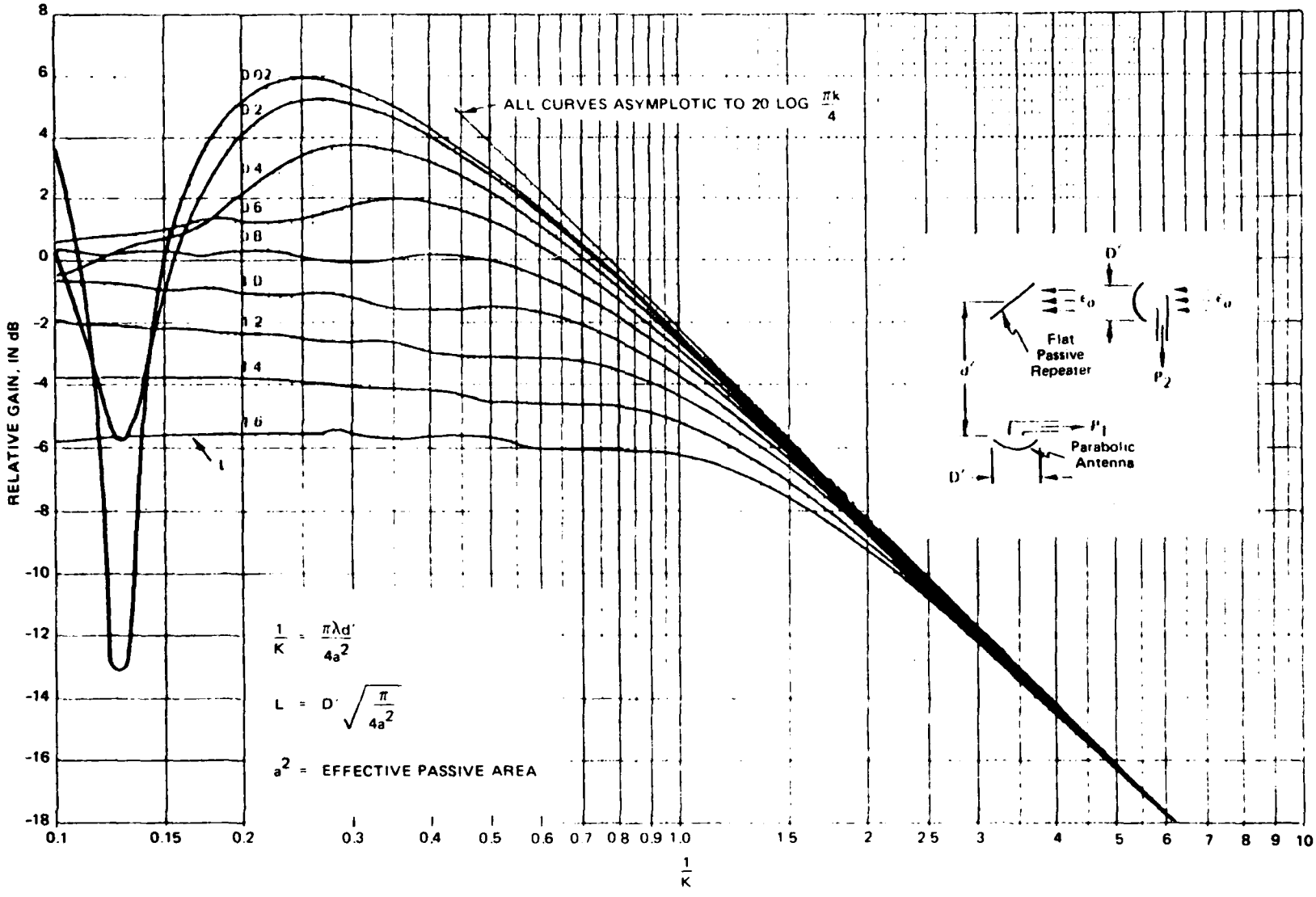

Figure 5-14. Antenna reflector efficiency curves.

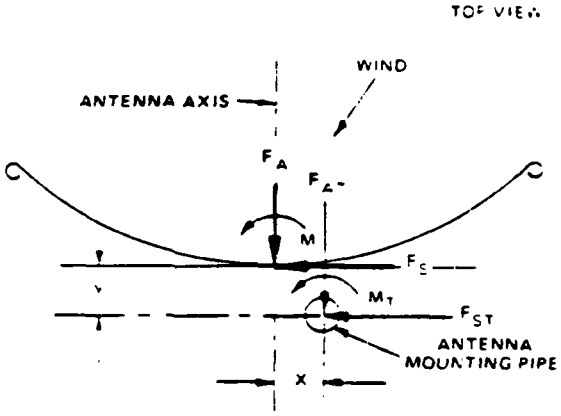

Figure 5-15. Wind forces acting on a parabolic antenna.

The variation of these coefficients with wind angle is illustrated in figures 5-16 through 5-18. Figure 5-16 demonstrates the three windloading coefficients for standard Andrew parabolic antennas, while figure 5-17 shows the windloading coefficients for standard Andrew antennas with fiberglass radomes. Figure 5-18 shows the same force coefficient for the Andrew high-performance antennas. These figures are based on wind tunnel investigations and apply to any size antenna and any wind velocity.

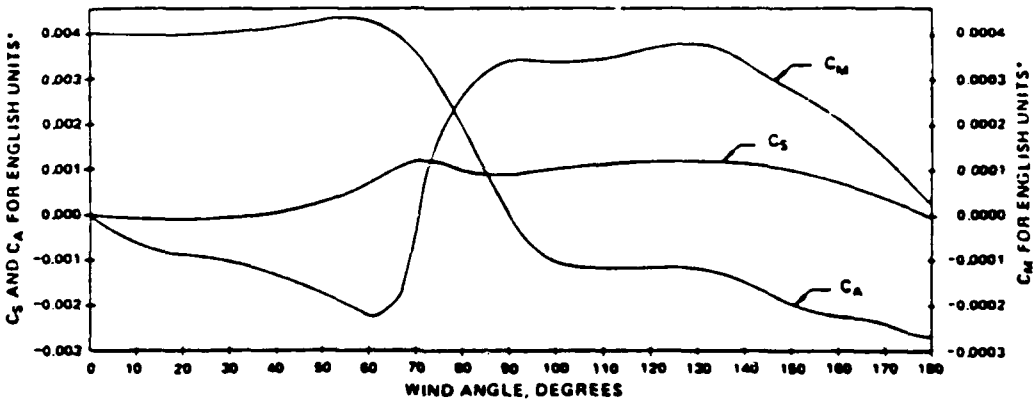

Figure 5-16. Windload coefficients for standard antennas.

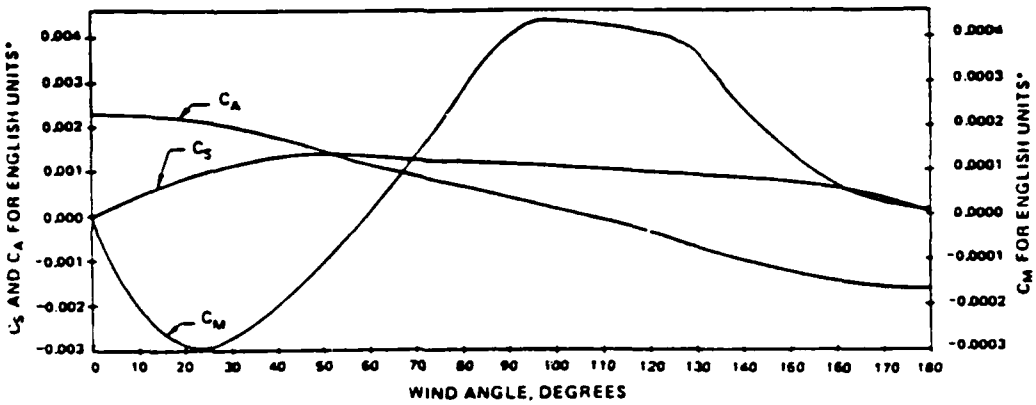

Figure 5-17. Windload coefficients for standard antennas with radomes.

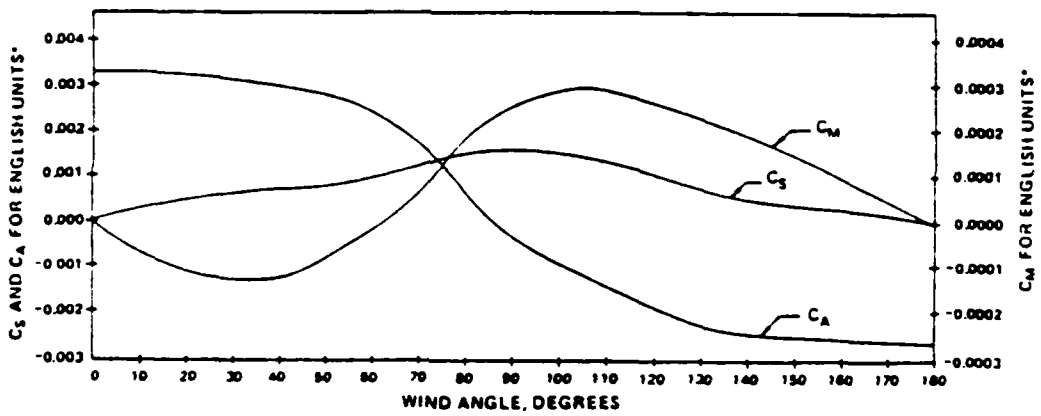

Figure 5-18. Windload coefficients for high-performance antennas.

The total moment and forces exerted on the antenna mounting pipe can be determined by

$$F_{AT} = F_A, \qquad F_{ST} = F_S$$

and

$$M_T = M + F_A\ (X) + F_S\ (Y)$$

where

X = the offset of the mounting pipe in feet (meters) and

Y = the distance on the reflector axis from the reflector vertex to the center of the mounting pipe in feet (meters).

Values of X and Y for standard size antennas are given by table 5-5.

TABLE 5-5

DIMENSIONS X AND Y AND ANTENNA FRONTAL AREA "A"

Diameter (feet)	X feet (meters)	Y feet (meters)	Frontal Area (A) sq ft (sq m)
4	0.448 (0.1366)	0.917 (0.2795)	12.5 (1.16)
6 Standard	0.448 (0.1366)	1.031 (0.3142)	28.2 (2.62)
6 High Performance	0.667 (0.2033)	0.896 (0.2731)	28.2 (2.62)
8	0.667 (0.2033)	0.990 (0.3018)	50.2 (4.66)
10	0.667 (0.2033)	0.990 (0.3018)	78.5 (7.29)
12	0.708 (0.2158)	1.042 (0.3176)	113.1 (10.51)
15	-0.667 (-0.2033)	1.948 (0.5938)	176.7 (16.42)

The demonstration of windloading forces on an antenna may best be shown with an example. Consider the following forces on a standard antenna, as illustrated in figure 5-15. The maximum axial or thrust force occurs at a wind angle of 56°, whereas the maximum side force and twisting moment occurs at an angle of 125° (obtained from figure 5-16). (Table 5-6 lists the most important wind angles and the corresponding load coefficients from figure 5-16.) For a 12-foot diameter standard antenna, a 125-mph wind, and a 56° wind angle, the calculations are as follows:

A = 113 sq ft X = 0.708

V = 125 mph Y = 1.024

D = 12 ft

$$F_{AT} = F_A = C_A A V^2$$

$= 0.0044 \times 113 \times (125)^2$

$= 7769$ lb

$F_{ST} = F_S = C_S\ AV^2$

$= 0.0005 \times 113 \times (125)^2$

$= 883$ lbs

$M = C_M\ DAV^2$

$= -0.00022 \times 12 \times 113 \times (125)^2$

$= -4661$ ft-lb

$M_T = M + F_A\ (X) + F_S\ (Y)$

$= -4661 + 7769\ (0.708) + 883\ (1.042)$

$= 1759$ ft-lb

TABLE 5-6

LOAD COEFFICIENTS FOR STANDARD PARABOLIC ANTENNAS

Wind Angle (Degrees)	C_A	C_S	C_M
0	+0.0040	0.0	0.0
45	+0.00425	+0.0002	-0.00015
56	+0.0044	+0.0005	-0.00022
90	-0.00025	+0.00085	+0.000345
125	-0.00125	+0.0012	+0.000375
180	-0.00270	0.0	0.0

Table 5-7 lists the maximum axial force (F_{AT}), side force (F_{SA}), and twisting moment (M_T) transferred to a supporting structure by microwave antennas. Wind in every case is at 125 mph (200 km/hr) and from the worst direction (not necessarily the same direction for each force).

TABLE 5-7

WIND FORCES AT 125 MPH (200 KM/HR)

Antenna Type	Antenna Diameter (ft)	F_{AT} Max Lb (kg)	F_{ST} Max Lb (kg)	M_T Max Ft-Lb (kg-m)
Standard	4	870 (395)	240 (110)	615 (85)
Antenna	6	1950 (885)	530 (240)	1730 (240)
Without	8	3460 (1570)	950 (430)	3940 (545)
Radome	10	5410 (2455)	1480 (670)	7080 (980)
	12	7800 (3540)	2130 (965)	11680 (1615)
	15	12170 (5520)	3330 (1510)	24400 (3375)
Standard	4	450 (205)	270 (120)	565 (80)
Antenna	6	1010 (460)	610 (275)	1650 (230)
With	8	1790 (810)	1075 (490)	3720 (515)
Radome	10	2800 (1270)	1680 (760)	6880 (950)
	12	4030 (1830)	2420 (1100)	11520 (1595)
High Per-	6	1440 (655)	680 (310)	1750 (240)
formance	8	2560 (1160)	1200 (545)	3570 (495)
Antenna	10	4000 (1815)	1880 (855)	6260 (865)
	12	5760 (2615)	2700 (1225)	10240 (1415)
	15	9000 (4080)	4230 (1920)	21840 (3020)

5.4.7 Antenna Weight. Forces associated with the antenna weight are also an important consideration. Table 5-8 lists the self weight (dead weight) of various antennas with no ice and also with 1/2-inch of radial ice having 56 lb/cu ft density. Figure 5-19 defines the variable X_{CG}, as well as illustrating the approximate center of gravity of a parabolic antenna mounted vertically.

5.5 Waveguide and Transmission Line. One of the most important components of any transmission system is the transmission line. The most straightforward transmission line consists of two parallel wires used to transmit low-frequency energy with little loss. At frequencies above 300 MHz, another type of transmission link (known as the coaxial cable) must be used. However, above 2 GHz the losses of a coaxial cable become significant, and waveguide must be used. The purpose of this section is to provide a general discussion of the types of

TABLE 5-8

ANTENNA WEIGHT AND CENTER OF GRAVITY
(INCLUDES MOUNTS)

Antenna Diameter (ft)	Without Ice W, Lb (kg)	Without Ice *X_{CG}, In (mm)	With 1/2-in Radial Ice 0.92 Density W, Lb (kg)	With 1/2-in Radial Ice 0.92 Density *X_{CG}, In (mm)
STANDARD ANTENNAS				
4 (1 piece)	104 (47)	7.0 (178)	175 (79)	10.9 (277)
6 (1 piece)	134 (61)	10.0 (254)	294 (133)	13.5 (343)
8 (1 piece)	251 (114)	13.5 (343)	536 (243)	16.8 (427)
8 (2 piece)	264 (120)	14.0 (356)	550 (249)	17.3 (439)
10 (1 piece)	317 (144)	18.0 (457)	784 (356)	21.7 (551)
10 (2 piece)	336 (152)	18.5 (470)	804 (365)	22.2 (564)
12 (1 piece)	540 (245)	19.0 (483)	1158 (525)	22.3 (566)
12 (2 piece)	600 (272)	19.6 (498)	1219 (553)	22.9 (582)
15 (2 piece)	1240 (562)	32.3 (820)	2269 (1029)	36.4 (925)
STANDARD ANTENNAS WITH RADOMES				
4 (1 piece)	119 (54)	10.0 (254)	189 (86)	14.6 (371)
6 (1 piece)	162 (73)	13.7 (348)	321 (146)	19.6 (498)
8 (1 piece)	304 (138)	19.8 (503)	621 (282)	25.0 (635)
10 (1 piece)	402 (182)	25.8 (655)	916 (415)	31.7 (805)
12 (1 piece)	654 (297)	26.9 (683)	1356 (615)	32.8 (833)
HIGH PERFORMANCE ANTENNAS				
6 (1 piece)	301 (137)	18.4 (467)	521 (236)	21.2 (538)
8 (1 piece)	447 (203)	26.5 (673)	974 (430)	28.7 (729)
8 (2 piece)	460 (209)	27.0 (686)	989 (449)	28.8 (732)
10 (1 piece)	541 (245)	30.2 (767)	1234 (560)	32.2 (818)
10 (2 piece)	560 (254)	30.7 (780)	1254 (569)	32.3 (820)
12 (1 piece)	850 (386)	31.2 (792)	1874 (850)	35.8 (909)
12 (2 piece)	860 (390)	31.8 (808)	1885 (855)	36.0 (914)
15 (2 piece)	1780 (807)	51.4 (1306)	2777 (1260)	54.0 (1372)

*See figure 5-19 for definition of X_{CG}.

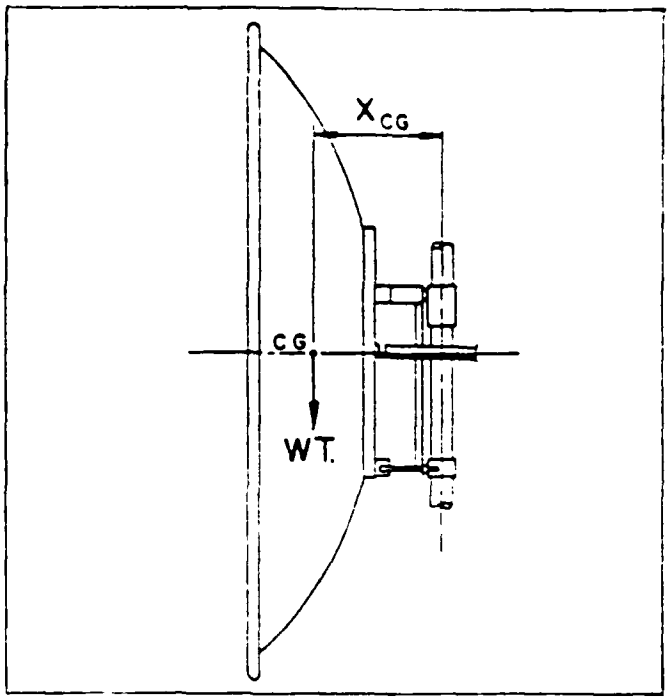

Figure 5-19. Antenna center of gravity.

coaxial cable and waveguide used in microwave systems, as well as some considerations involved in their implementation. This subsection is divided into four distinct discussions:

a. Coaxial cable.

b. Waveguide.

c. Pressurization equipment.

d. Auxiliary equipment.

5.5.1 Coaxial Cable. In the 2-GHz microwave bands, coaxial cable is usually applied, and it may be of either a foam or air dielectric. The air-dielectric cable is the pressurized type. Coaxial cable is supplied in three sizes for 2-GHz applications: 1/2-inch diameter, low-loss foam dielectric (LDF4); 7/8-inch diameter, low-loss foam or standard air dielectric (LDF5 or HJ5); and 1-5/8-inch diameter, low-loss foam or standard air dielectric (LDF7 or HJ7). Table 5-9 lists various types of cable and the corresponding Andrew part numbers.

TABLE 5-9

CABLE/ANTENNA PART NUMBER

Foam Dielectric	Andrew Part No.	Air Dielectric	Andrew Part No.
1/4-in super flexible	FSJ1	*1/2-in standard	HJ4
1/2-in super flexible	FSJ4	*7/8-in standard	HJ5
1/4-in standard	FHJ1	1-5/8-in standard	HJ7
3/8-in standard	FHJ2	3-in standard	HJ8
*1/2-in low-loss	LDF4	4-in standard	HJ11
*7/8-in low-loss	LDF5	5-in standard	HJ9
*5/8-in low-loss	LDF7		

*For microwave applications (1700- to 2300-MHz band).

The larger diameter coaxial cable generally is used only in high-power hf or broadcast applications, not in microwave applications. It is listed in table 5-9 for reference only. Figures 5-20 and 5-21 give attenuation for these types of cables in dB/100 feet and dB/100 meters, while figure 5-22 illustrates the attenuation correction for temperature change. In the 2-GHz microwave applications, the size of cable should be selected as a function of the length of cable required, as well as the amount of loss allowable in the system (fade margin).

An important consideration to the systems engineer is the voltage standing wave ratio (vswr) of the transmission line being used. The vswr is the ratio of the amount of power applied to the transmission line from the source (transmitter) to the effective power that reaches the antenna. A perfect vswr is 1.0. This implies that all power applied to the line is effectively transmitted, with no reflected power caused by impedance mismatch. Table 5-10 provides a convenient cross-reference of vswr, return loss, and swr in decibels.

The optimal conditions in a transmission line system exist when the source output impedance (usually 50 ohms) is equal to the load impedance. The characteristic impedance of a single coaxial cable may be calculated by

$$Z_o = \frac{138}{\sqrt{E}} \log \left(\frac{D}{d}\right)$$

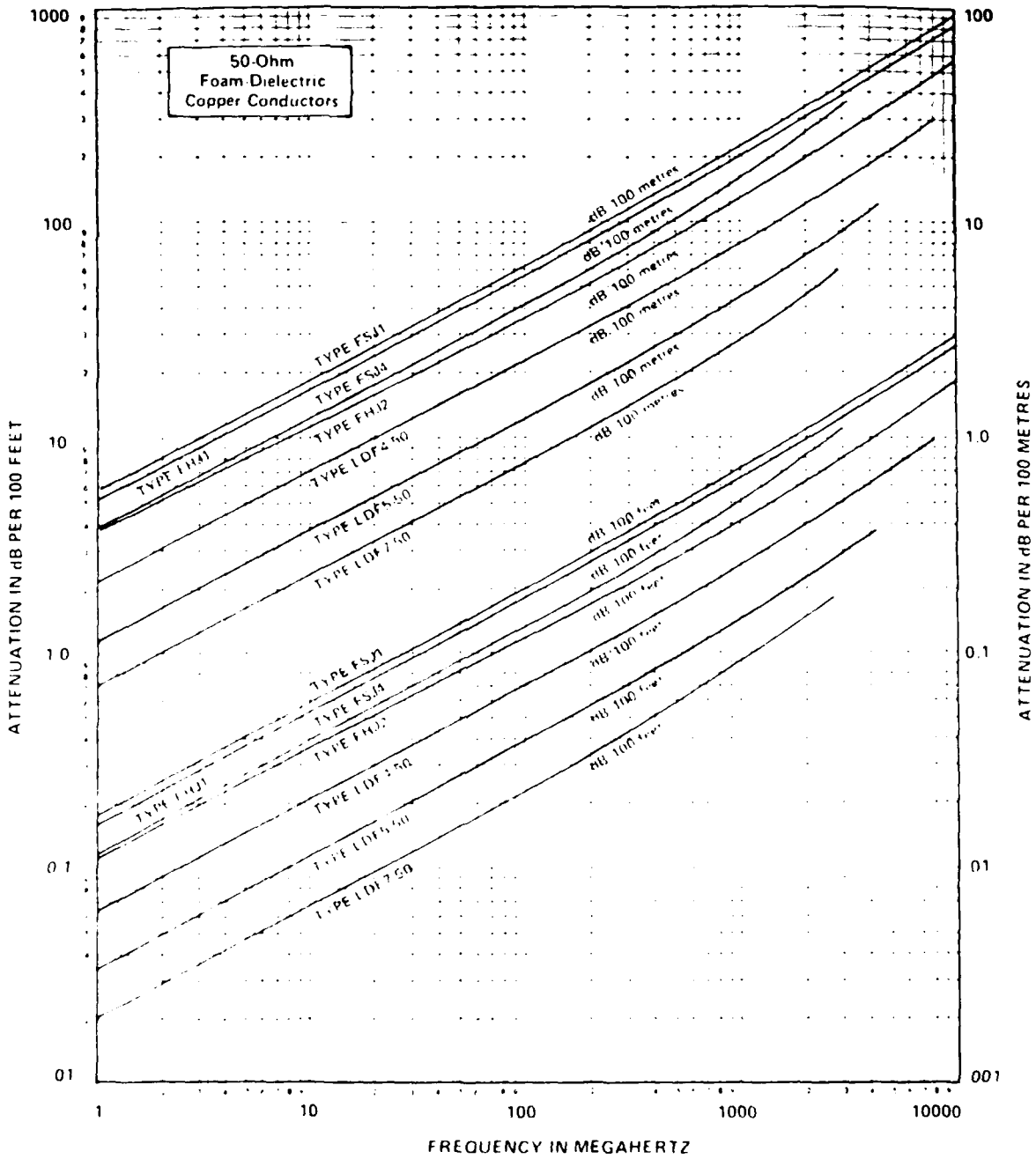

ATTENUATION CURVES BASED ON:
VSWR 1.0
AMBIENT TEMPERATURE 24°C (75°F)

CONVERSION DATA
FOR OTHER AMBIENT TEMPERATURES,
SEE CURVE ON FIGURE 5-22.

Figure 5-20. Foam dielectric cable attenuation.

40w

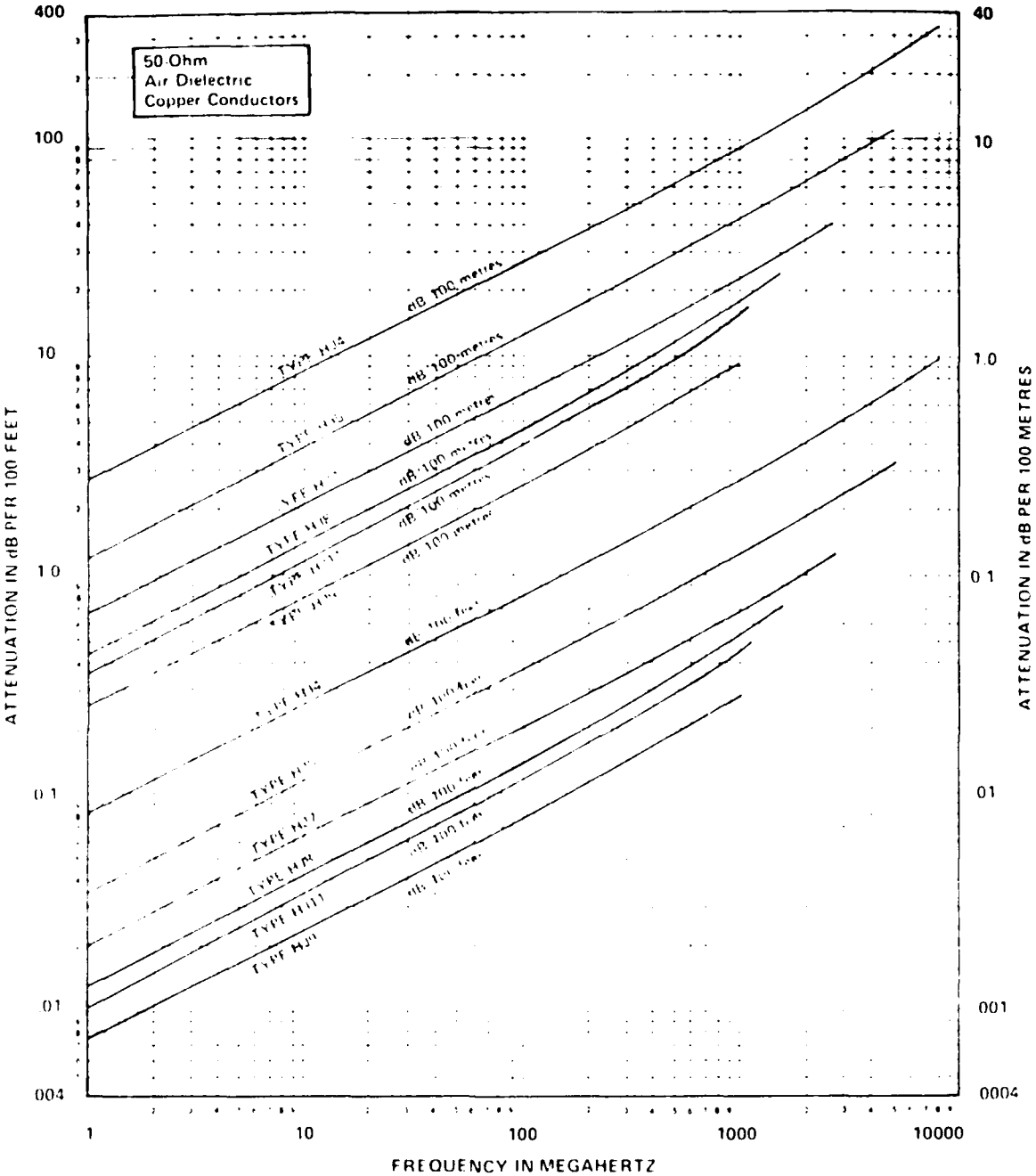

ATTENUATION CURVES BASED ON: VSWR 1.0
AMBIENT TEMPERATURE 24°C (75°F)
ATMOSPHERIC PRESSURE, DRY AIR

CONVERSION DATA:
FOR OTHER AMBIENT TEMPERATURES,
SEE CURVE ON FIGURE 5-22.

Figure 5-21. Air dielectric cable attenuation.

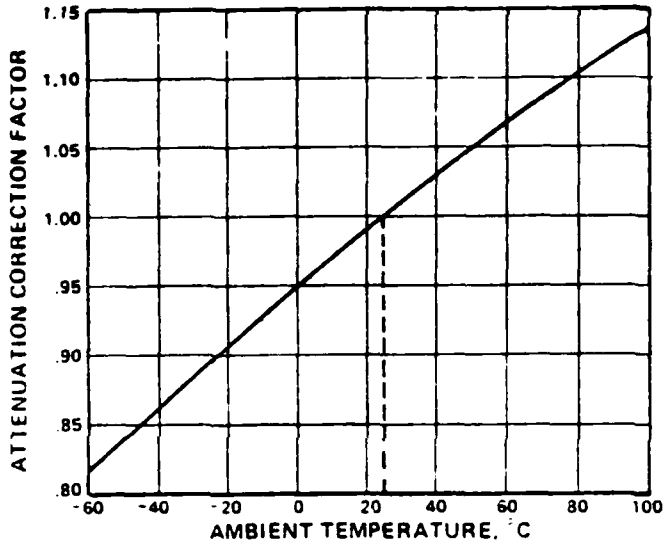

Figure 5-22. Variation of coaxial cable attenuation with ambient temperature.

TABLE 5-10

VSWR CONVERSION CHART

VSWR	Return Loss (dB)	Reflection Coefficient (percent)	SWR (dB)
1.01	46.1	0.5	0.086
1.02	40.1	1.0	0.172
1.03	36.6	1.5	0.257
1.04	34.2	2.0	0.341
1.05	32.3	2.4	0.424
1.06	30.7	2.9	0.506
1.07	29.4	3.4	0.588
1.08	28.3	3.8	0.668
1.09	27.3	4.3	0.749
1.10	26.4	4.8	0.828
1.11	25.7	5.2	0.906
1.12	24.9	5.7	0.984
1.13	24.3	6.1	1.06
1.14	23.7	6.5	1.14
1.15	23.1	7.0	1.21
1.16	22.6	7.4	1.29
1.17	22.1	7.8	1.36
1.18	21.7	8.3	1.44
1.19	21.2	8.7	1.51
1.20	20.8	9.1	1.58
1.30	17.7	13.0	2.28

where

Z_0 = characteristic impedance,

E = dielectric constant (1-inch air), and

D and d are given by figure 5-23. (Note that the line impedance is independent of line length.) In most cases, however, the system designer will not be required to calculate coaxial impedance and may assume 50 ohms.

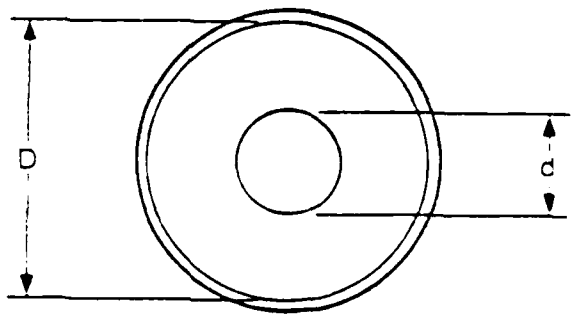

Figure 5-23. Single coaxial cable profile.

When the loss of the transmission line is known, the efficiency of the line may be calculated. The transmission line efficiency, defined as the percentage of transmitter power that reaches the antenna, is given by

$$E_{ff} = \frac{100}{\text{Antilog } \frac{dB}{10}} \%$$

where

E_{ff} = efficiency of the line expressed as a percentage and

dB = total attenuation of the transmission line at the frequency of interest.

Figure 5-24 provides a convenient conversion from line loss to percent efficiency.

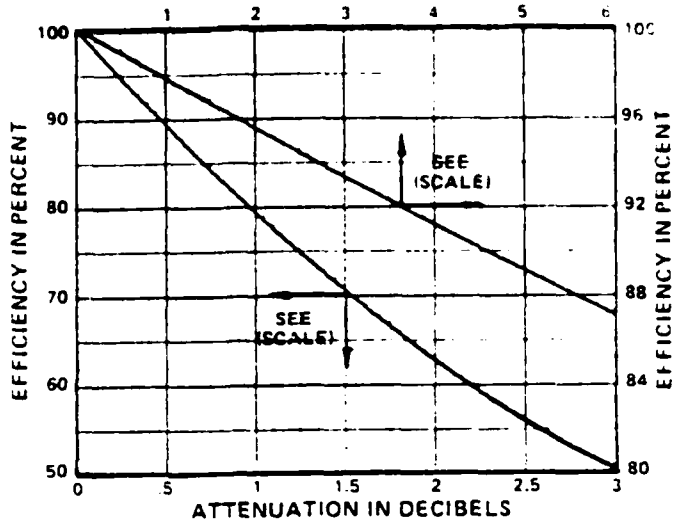

Figure 5-24. Efficiency conversion chart for dB.

5.5.2 Waveguide. Waveguide is used almost exclusively in all microwave bands outside of the 2-GHz frequencies (1700 to 2300 MHz). A waveguide is simply a single hollow metallic conductor, either rigid or flexible, which is capable of transferring RF energy from one point to another in a number of different electric and magnetic (E and H) fields.

The configuration in which energy propagates through a waveguide is referred to as the mode. The propagation mode depends upon the operating frequency and physical dimensions of the waveguide. Generally, there are two fundamental classes of modes that may appear in a waveguide. In one class, the electric field is always perpendicular to the direction of propagation. This mode is known as transverse electric (TE). In another mode, the magnetic field is always perpendicular to the direction of propagation. This class is known as the transverse magnetic (TM) class. The two fields are perpendicular to each other and oriented at right angles to the direction of propagation.

The waveguide propagation fields that constitute these modes obey predictable physical laws. For example, each mode has a cutoff frequency. This is the lowest frequency that will propagate through a waveguide while operating in a particular mode. Energy at frequencies below the cutoff is attenuated to a negligible level, while energy above the cutoff frequency is transmitted with very little attenuation.

The most frequently used mode, called the dominant mode, is illustrated in figure 5-25. The solid black lines represent voltage lines and indicate the direction

of the electric field (E). The dashed lines indicate the magnetic field (H). In the end view, there is an electric field intensity between the narrow dimension sides of the waveguide, which is maximum at the center. Note that as the wave propagates along the waveguide, the electric and magnetic fields move together. Figure 5-25 represents the electromagnetic field as it exists at one instant of time. Although the amplitude at position "a" has zero intensity, a quarter cycle later the amplitude at position "a" will be the same as the present amplitude at position "b."

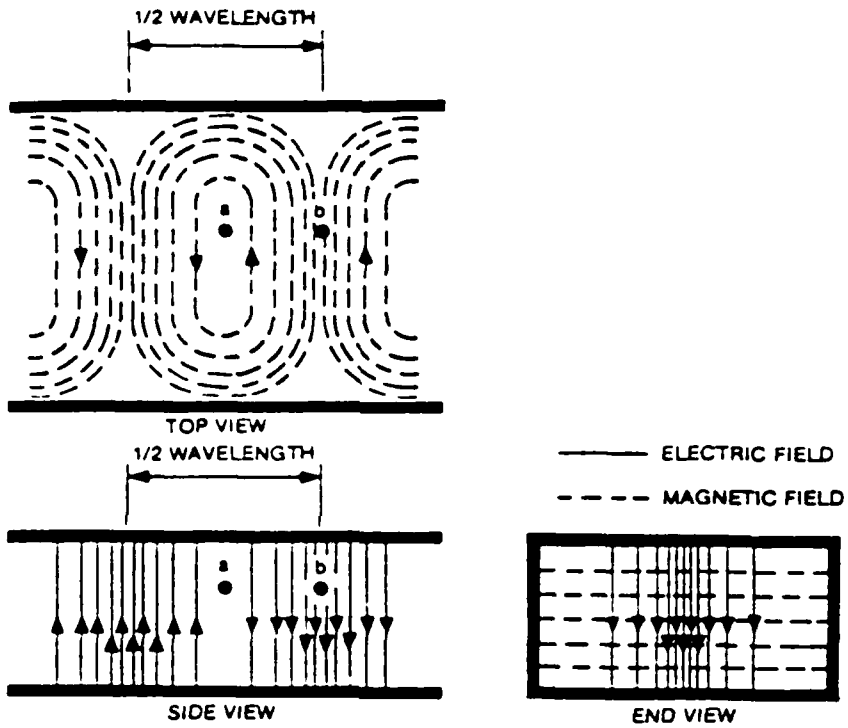

Figure 5-25. Field configuration of the dominant mode ($TE_{1,0}$) in a rectangular waveguide.

The particular mode in each class is designated by two subscripts (for example, $TE_{1,0}$). The first subscript (1) indicates the number of half-wave variations of the electric field intensity across the wide dimension of the waveguide. The second subscript (0) denotes the number of half-wave variations across the narrow dimension. In figure 5-25, the voltage intensity varies from zero to a maximum and back to zero across the wide dimension, which is one-half wavelength. Across the narrow dimension, there is no variation in voltage intensity. Thus, in the transverse electric mode (TE) the subscripts 1 and 0 are added. The $TE_{1,0}$

is the dominant mode in a rectangular waveguide. Other subscripts designate higher order modes.

Many higher order modes other than the dominant mode may exist in a waveguide. However, the common practice is to design the waveguide in order to propagate the dominant mode and suppress all others. The width of the usual rectangular waveguide is greater than one-half wavelength but less than one wavelength of the operating frequency. The height of the waveguide is about one-half the width. These dimensions are small enough to prevent higher order modes from forming and yield the necessary cutoff frequency sufficiently below the operating frequency.

The dimensions of the waveguide are inversely proportional to the lowest frequency that it can propagate. The larger the waveguide, the lower the cutoff frequency. Conversely, the higher the frequency, the smaller the waveguide. For a rectangular waveguide, the maximum wavelength of a transmitted wave is equal to twice the width of the waveguide. To transmit energy through a waveguide at 8 GHz, the width must be about 0.75 inch, or $\lambda/2$.

The waveguide also has a characteristic impedance similar to that of a coaxial cable. This impedance is given by

$$Z_o = \frac{120}{\sqrt{1-\left(\frac{f_c}{f}\right)^2}} \text{ ohms}$$

where

Z_o = characteristic impedance in ohms,

f_c = cutoff frequency, and

f = operating frequency.

Note that the operating frequency must be greater than the cutoff frequency in order for this equation to be useful.

Three basic types of waveguide are now in use: elliptical, circular, and rectangular. These types are discussed in the following sections.

5.5.2.1 Elliptical Waveguide. Elliptical waveguide is most common in locations where long runs are required because it can be supplied in long, continuous runs. Other applications of elliptical waveguide are in locations that have 90-degree bends. This is because of the inherent physical limitations of rectangular waveguide.

Most elliptical waveguide propagates in the $TE_{1,1}$ dominant mode. Table 5-11 provides a convenient cross-reference between operating bands and Andrew waveguide type number.

TABLE 5-11

ELLIPTICAL WAVEGUIDE TYPES

Types	Operating Band (GHz)	$TE_{1,1}$ Mode Cutoff Frequency GHz
EW20	1.9 - 2.700	1.60
EW28	2.6 - 3.500	2.20
EW37, EWP37	3.3 - 4.300	2.81
EW44, EWP44	4.2 - 5.100	3.58
EW52, EWP52	4.6 - 6.425	3.63
EW64, EWP64	5.3 - 7.750	4.36
EW71, EWP71	6.5 - 8.500	5.50
EW85	7.7 - 10.00	6.55
EW90, EWP90	8.3 - 11.70	6.54
EW122, EWP122	10.0 - 13.25	9.46
EW132	11.0 - 15.35	9.33

5.5.2.2 Circular Waveguide. Circular waveguide has the least loss of all three types and is capable of propagating two orthogonal polarizations within the same guide. These propagation modes are of the $TE_{1,1}$ type (same as elliptical) and typically require at least 30-dB isolation between them. However, the limitations of circular waveguide make it difficult for the system engineer to use. For example, it is practical only when used in straight runs, and the transition from rectangular to circular waveguide requires expensive and complex networks.

An important characteristic of circular waveguide is its reconverted mode level (RML), which is the level of higher order mode energy reconverted to the dominant mode in a circular waveguide system. Higher order modes become trapped within the circular waveguide because they cannot propagate in the connecting rectangular waveguide. Group delay distortion and noise result when a portion of this

energy, delayed in time, is reconverted to the dominant mode. Therefore, a larger negative RML figure equates to a more acceptable transmission system. Table 5-12 equates Andrew type numbers for circular waveguide to the various frequency bands of interest.

TABLE 5-12

CIRCULAR WAVEGUIDE TYPES

Waveguide Type	Frequency Band (GHz)	Polarization	Maximum RML (dB)
WC269	3.700 - 4.200	Single	-75
WC269	3.700 - 4.200	Dual	-60
WC205	5.925 - 6.425	Single	-75
WC205	5.925 - 6.425	Dual	-60
WC166	5.925 - 6.425	Single	-75
WC166	5.925 - 6.425	Dual	-75
WC166	6.426 - 7.125	Single	-75
WC166	6.425 - 7.125	Dual	-75
WC166	7.125 - 8.400	Single	-75
WC166	7.125 - 8.400	Dual	-60
WC109	10.700 - 11.700	Single	-75
WC109	10.700 - 11.700	Dual	-60
WC109	12.200 - 13.250	Single	-75
WC109	12.200 - 13.250	Dual	-60

5.5.2.3 Rectangular Waveguide. Rectangular waveguide is very common and is usually made of an oxygen-free, high-conductivity copper material (OFHC). Its limitations lie in the unavailability of long, continuous runs. The operating mode of most rectangular waveguide is of the dominant $TE_{1,0}$ mode. Table 5-13 provides a convenient reference of Andrew rectangular waveguide type numbers. Note that both standard and low vswr waveguide types are available.

TABLE 5-13

RECTANGULAR WAVEGUIDE TYPES

Waveguide Size	Standard Operating Band (GHz)	Low VSWR Standard Band *(GHz)
WR229	3.30 - 4.90	3.540 - 4.200 3.700 - 4.200
WR187	3.95 - 5.85	3.400 - 5.00
WR159	4.90 - 7.05	5.925 - 6.425
WR137	5.85 - 8.20	5.925 - 6.425 6.425 - 7.125 7.125 - 7.750
WR112	7.05 - 10.00	7.125 - 7.750 7.750 - 8.400
WR90	8.20 - 12.40	10.700 - 11.700
WR75	10.00 - 15.00	-
WR62	12.40 - 18.00	-

*For low vswr waveguide, the frequency band must be specified as per this table.

Any waveguide system possesses attenuation characteristics that must be considered in planning a transmission system. Figures 5-26 and 5-27 illustrate the losses associated with various types of waveguide as a function of operating frequency, waveguide type, and length.

5.5.3 Pressurization Equipment. All air-dielectric waveguides and coaxial cables should be maintained under dry air or dry nitrogen pressure to prevent electrical performance degradation caused by moisture condensation. If a constant positive pressure is not maintained, "breathing" with temperature variations will occur. This permits moisture to enter into the line. Moisture can cause increased attenuation and vswr, and may provide a path for voltage breakdown.

Pressurization systems can be classified as static or dynamic. In a static system, the transmission line is pressurized by a hand pump (or some other means) and the pressurization source is removed. Transmission line systems are not hermetically sealed and will eventually lose their pressure. Therefore, all static systems require periodic recharging. A dynamic system incorporates a pressurizing source that also acts as a reservoir. The pressurizing source may be a nitrogen tank with a regulator or an automatic

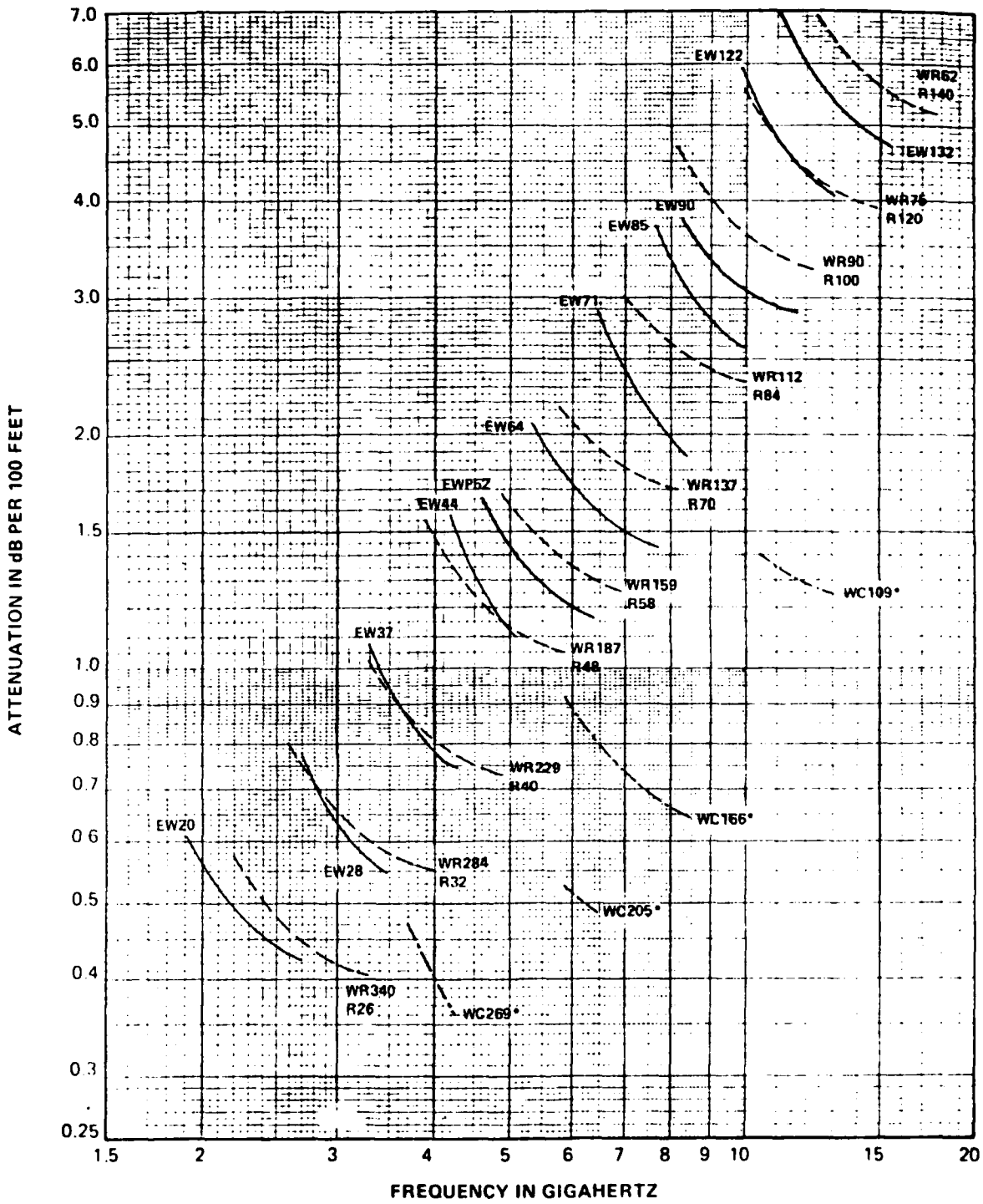

The above attenuation curves are guaranteed within ±5%.

Figure 5-26. Waveguide attenuation (English units).

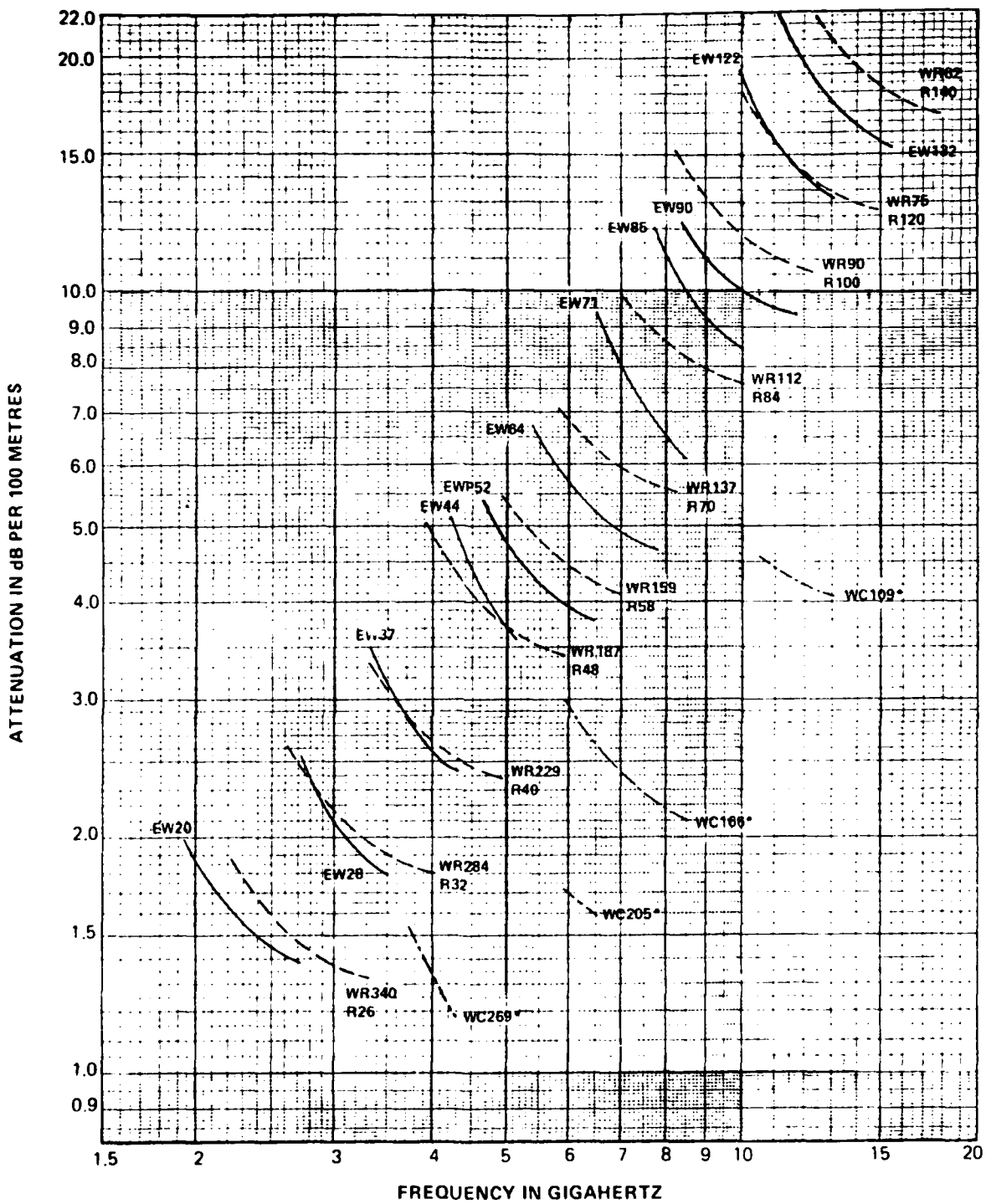

The above attenuation curves are guaranteed within ±5%.

Figure 5-27. Waveguide attenuation (metric units).

dehydrator. The source is permanently connected to the transmission line system and recharges it to a preset positive pressure, as required, to compensate for leakage losses. This provides positive pressure in the line at all times.

Selection of the proper pressurization system is primarily based on the volume of dry air that must be supplied, cost, and availability of maintenance and electrical power. For systems where electrical power is not available, a nitrogen tank is normally used. A dry-air hand pump may be used for systems with short runs of small diameter cable or waveguide where inspection and maintenance are available every 5 to 10 days. An automatic or manual desiccant-reactivation dehydrator is recommended for most other types of systems.

5.5.3.1 Automatic Dehydrators. Automatic dehydrators use the principle of gas separation by desiccant absorption. Common units consist of a compressor and two cylindrical absorption drying chambers switched by a timer control and solenoid-operated valves. The drying chambers are used alternately, approximately every 30 seconds. While one chamber is drying the air passing through it, the other chamber is being purged of accumulated moisture. Twice every minute the roles of these two units are reversed, so that the output into the transmission line is always dry.

5.5.3.2 Manually Regenerated Dehydrators. Manually regenerated dehydrators require frequent inspection and periodic replacement or regeneration of the desiccant. The frequency of regeneration depends on the leakage rate of the system. For a small system, the regeneration cycle may be more than a year. However, frequent inspection is necessary because of the possibility of sudden leaks developing and exhausting the desiccant in only a few hours.

5.5.3.3 Nitrogen Tanks. Nitrogen tank systems may be the economic choice for a small system that may be carefully maintained. One advantage is that nitrogen tank systems do not consume electric power. However, the replacement of nitrogen tanks is cumbersome. If they have to be replaced often, the economies may dictate the use of a fully automatic system.

The pressure inside a transmission line system must be maintained at a positive level, within the maximum pressure rating of all components. Most components have a rating of 10 lb/in^2 (70 *kPa). Pressurization in the 3 to 8 lb/in^2 (21 - 55 *kPa) range is recommended for these components.

Dehydrator output capacity is usually specified in ft^3/min (liters/min). Output capacity must be sufficient to provide reasonable purging and pressurizing times and must be sufficiently greater than the anticipated leak rate to result in a reasonable percentage running time. Typical transmission line systems may leak as much as 1 lb/in^2 (7 kPa)/day from an initial 8 lb/in^2 (55 kPa). The system should be designed so that the dehydrator runs no more than 5 percent of the time.

*1 kPa = 0.15 lb/in^2 = 0.010 kg/cm^2.

For manually regenerated units, the frequency of reactivation must also be calculated to determine if the interval is acceptable. For nitrogen bottle systems, the bottle life must be calculated.

The output capacity required of the pressurization unit is dependent upon the internal volume of the transmission line system, the maximum pressure required, and the anticipated leakage rate. Internal volume, purging time (for three volumes) and time to pressurize 1,000 feet of transmission line are listed in table 5-14 for the three basic Andrew types of pressurization equipment. The 1920D and 1930B units are automatic dehydrators, while the 40525A is a manually regenerated dehydrator.

5.5.4 Auxiliary Equipment. In addition to the basic transmission line, pressurization equipment, and antenna, there are other items the systems engineer must consider. These are the hardware items, which constitute the interface and actual implementation of the transmission system from the radio to the antenna. Among these components are the following:

a. Connectors.

b. Wall/roof feedthrough components.

c. Flanges - pressure and nonpressure types.

d. Cable/waveguide hangers.

e. Pressure fittings.

f. Transitions/adapters.

g. Grounding kits.

h. Special tools, including hoist grips, bending tools, and flaring kits for cable termination.

Figures 5-28 through 5-31 illustrate the use of these items, as well as the antenna and transmission line. Vendor-supplied catalogs must be used for specific requirements of the individual hardware items.

5.6 Passive Repeaters. Sometimes a tower cannot provide clearance over an obstruction. For example, if two sites are separated by a mountain, the microwave beam may have to be redirected at one or more intermediate points to get it around or over the mountain. Although repeater stations could be used at these points to amplify and retransmit the signal, passive repeaters may be used to merely change the path direction without amplification. These passive repeaters contribute no signal amplification, but they require no power and very little maintenance, so they can be located in places where access is difficult. There are two types of passive repeaters in common use: back-to-back and billboard.

TABLE 5-14

TIMES TO PURGE AND PRESSURIZE VARIOUS TYPES OF TRANSMISSION LINES

Transmission Line Types	Volume (Ft^3/ 1000 ft)	Volume Liters/ 1000 m)	Time to Purge 1000 Ft (300 m), Hrs, 3 Volumes			Time to Pressurize 1000 Ft (300 m) to 8 lb/in^2 (55 kPa), Minutes		
			1920D	1930B	40525A	1920D	1930B	40525A
Air-Dielectric Coaxial Cables								
1/2 in	0.8	74	0.03	0.20	0.04	1	2	1
7/8 in	3.5	325	0.13	0.88	0.19	2	10	2
1-5/8 in	14.0	1301	0.54	3.50	0.78	6	38	9
3 in	36.7	3410	1.41	9.18	2.04	15	100	22
4 in	69.9	6494	2.57	17.48	3.87	29	190	42
5 in	117.0	10870	4.50	29.25	6.48	49	318	71
Elliptical Waveguides								
EW132	1.8	167	0.06	0.45	0.09	1	5	1
EW122	2.7	251	0.09	0.68	0.15	1	7	2
EW90	3.6	334	0.14	0.90	0.20	2	10	2
EW85	4.2	390	0.15	1.05	0.24	2	11	3
EW77	6.3	585	0.24	1.58	0.35	3	17	4
EW64	7.8	725	0.30	1.95	0.43	3	21	5
EW52	11.3	1045	0.44	2.82	0.63	5	31	7
EW44	14.1	1310	0.54	3.53	0.78	6	38	9
EW37	21.1	1960	0.81	5.28	1.17	9	57	13
EW28	36.0	3345	1.38	9.00	2.01	15	98	22
EW20	60.5	5621	2.34	15.12	3.36	25	165	37
EW17	71.0	6596	2.73	17.75	3.93	30	193	43
Circular Waveguides								
WC109	6.5	604	0.24	1.63	0.36	3	18	4
WC166	15.0	1394	0.57	3.75	0.84	6	41	9
WC205	22.9	2127	0.87	5.73	1.26	10	62	14
WC269	39.5	3670	1.53	9.88	2.19	17	107	24

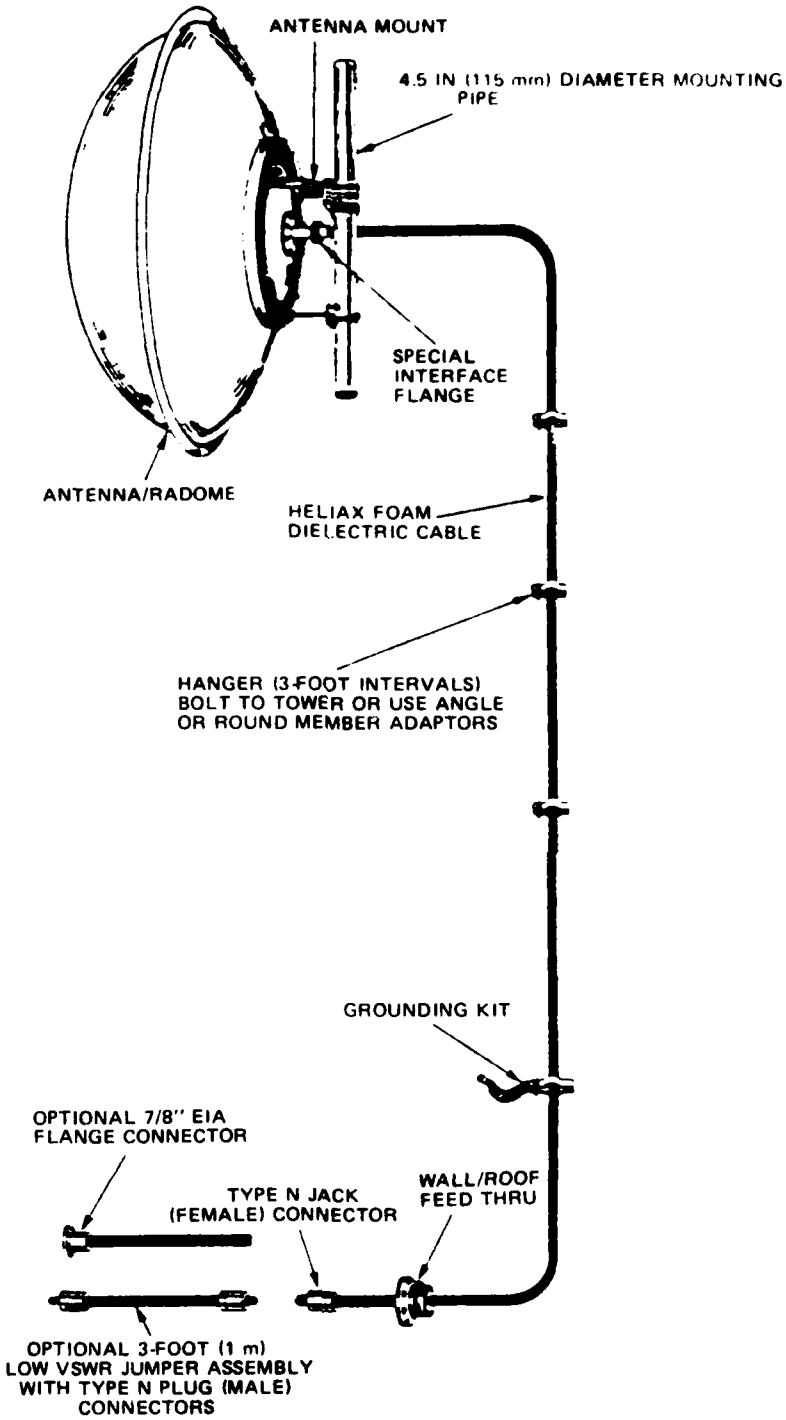

Figure 5-28. Typical unpressurized coaxial cable transmission system.

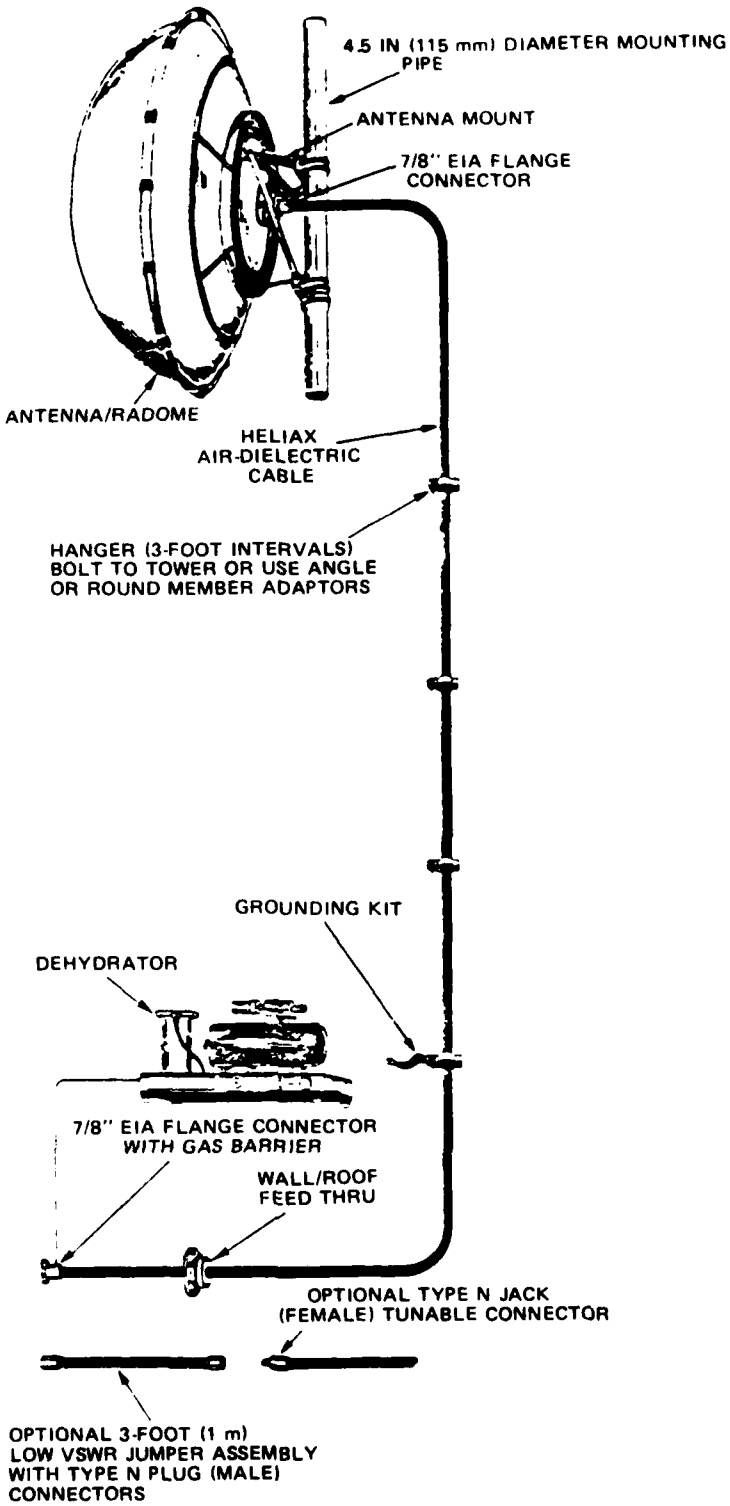

Figure 5-29. Typical pressurized coaxial cable transmission system.

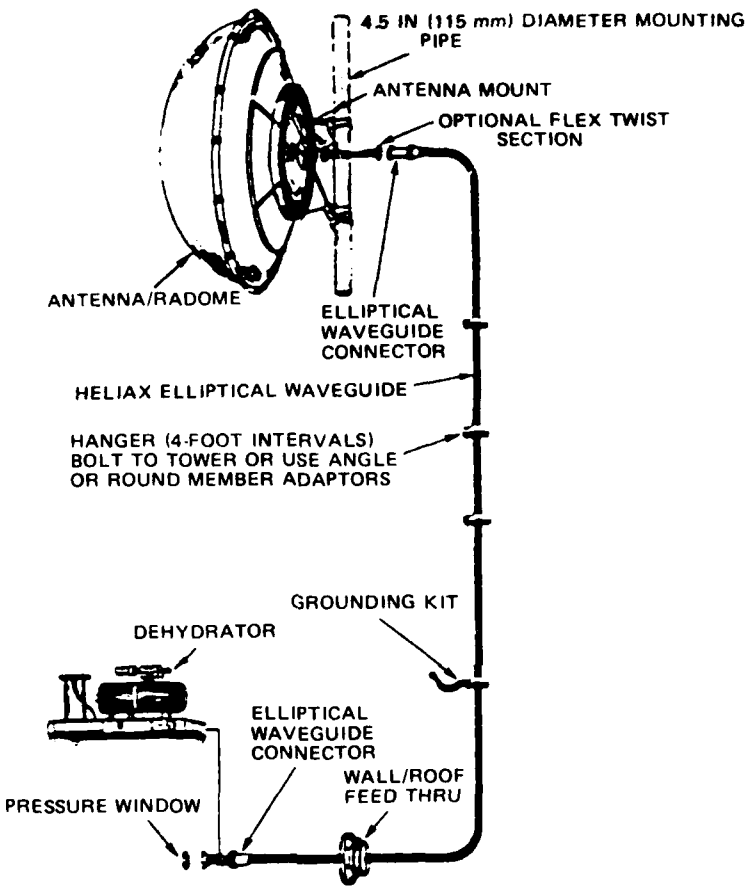

Figure 5-30. Typical elliptical waveguide transmission line system.

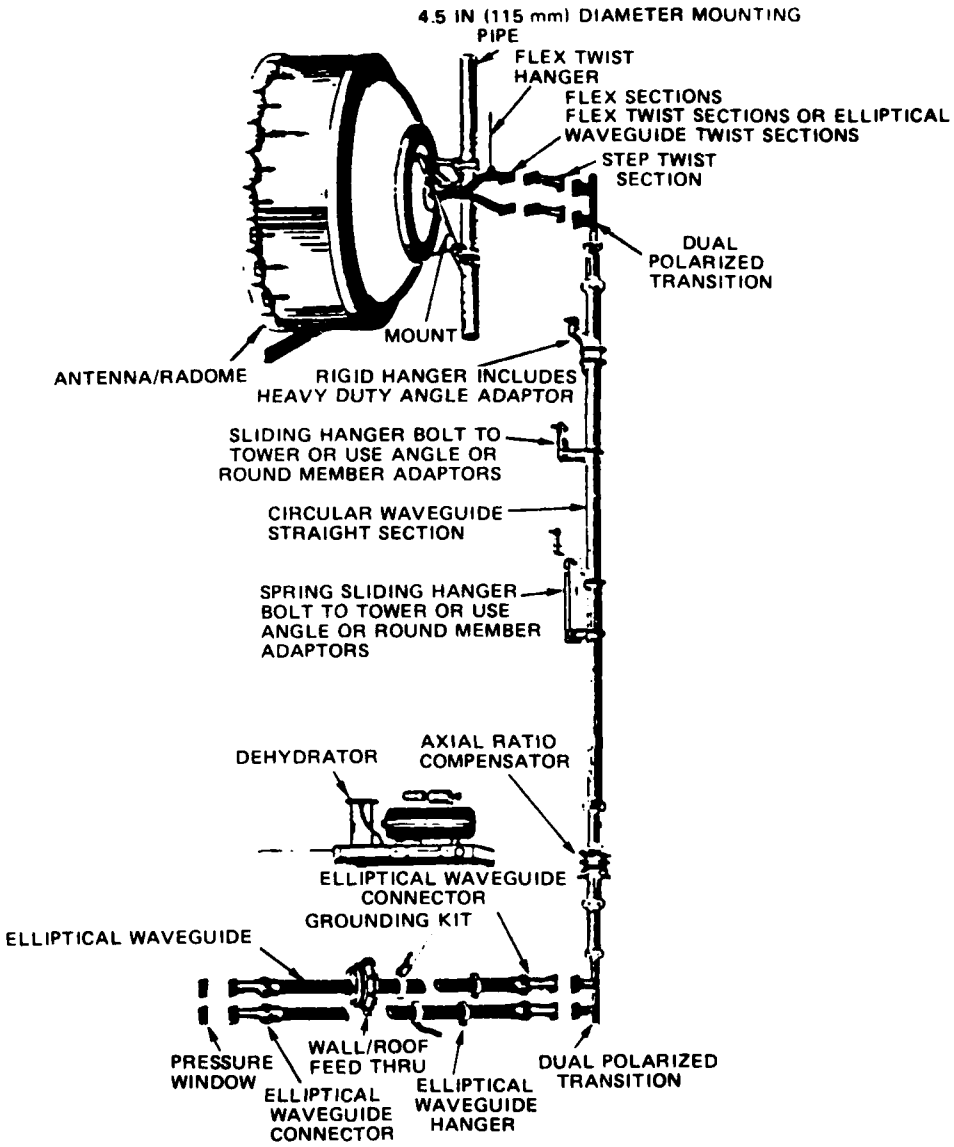

Figure 5-31. Typical circular waveguide transmission line system (shown with dual polarization and high-performance antenna).

5.6.1 Back-to-Back Passive Repeaters. The back-to-back passive repeater is relatively inefficient and is therefore used only on short paths. The efficiency of each of the antennas is approximately 55 percent. This efficiency factor, combined with the added loss of the short waveguide, renders this type of passive repeater unusable on most paths. The advantage of the back-to-back passive repeater is in its ability to redirect the microwave beam in virtually any direction without the added loss of multiple billboards. The back-to-back passive arrangement is illustrated in figure 5-32. The net path loss of the system, as configured in figure 5-32, is given by

$$NPL = LWGA + LWGP + LWGB + L_1 + L_2 - G_1 - G_2 - G_3 - G_4$$

where

LWGA, B and P = loss introduced by waveguide at three sites,

$L_{1,2}$ = free-space loss, and

$G_{1,2,3,4}$ = gain of the antennas at three sites.

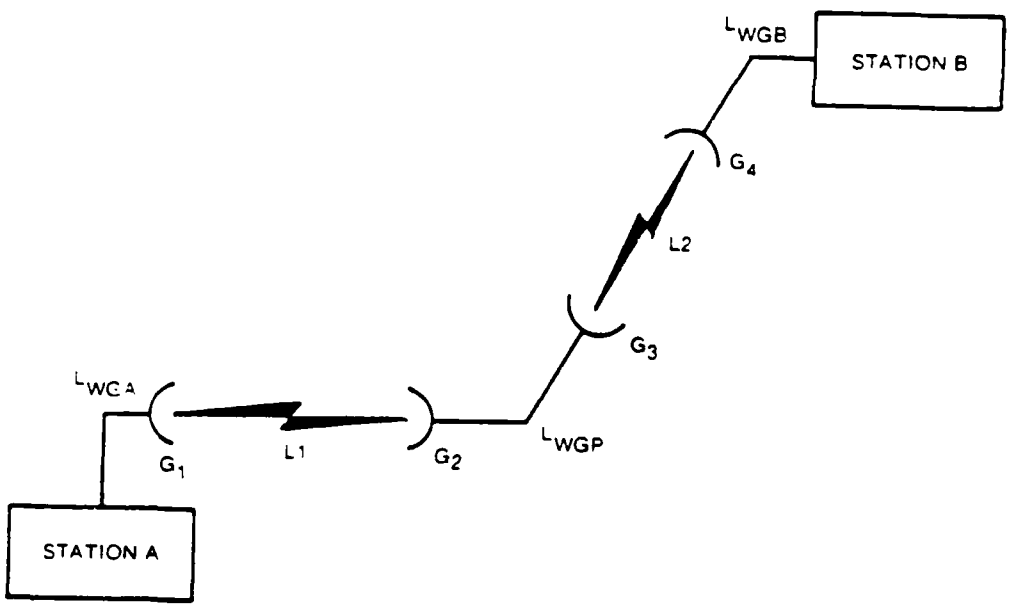

Figure 5-32. Back-to-back passive.

5.6.2 Billboard Passive Repeaters. Billboard passive repeaters fall into two basic configurations, depending upon the geometric relationships. These two categories are single billboard applications and twin billboard applications.

If the site of the passive repeater is off to one side or behind one terminal, so that the included angle θ between the two paths at the reflector is less than 130° (the smaller the angle the better), a single billboard can be used. This is the most common application and is illustrated in figure 5-33. From figure 5-33, the net path loss would be computed as follows:

$$NPL = LWGA + LWGB + L_1 + L_2 - G_1 - G_2 - G_p$$

where

LWGA, B, $L_{1,2}$ and $G_{1,2,\ p}$ are as defined in the previous section.

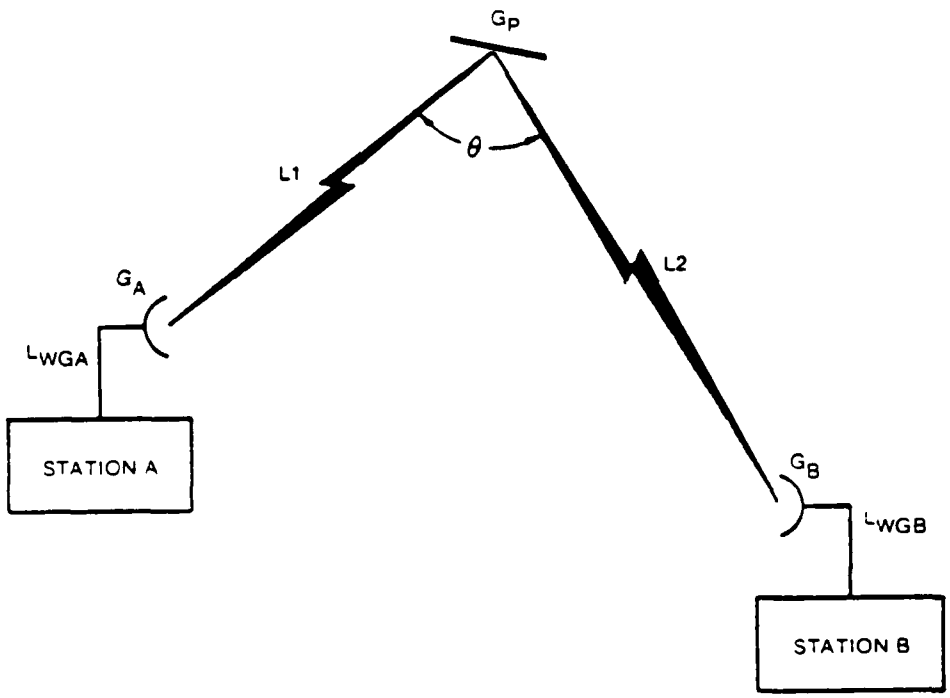

Figure 5-33. Single passive billboard application (θ should be kept less than 130 degrees).

If the only available location happens to be more or less in line with the path, a double billboard may be needed. This consists of two reflectors, usually fairly close together, geometrically arranged to reflect the beam at the proper angles. Double billboards are applicable in situations where the effective angular change in beam direction is less than 50° at the passive repeater location. Figure 5-34 illustrates the double billboard technique. The net path loss for figure 5-34 is computed as follows:

$$NPL = LWGA - LWGB + L_1 + L_2 + L_{cc} - G_A - G_B - G_{p1} - G_{p2}$$

where

LWGA and B, L_1, L_2, G_A, $_B$, $_{p1}$, and $_{p2}$ are previously defined and

L_{cc} = cross-coupling loss between the two passive repeaters.

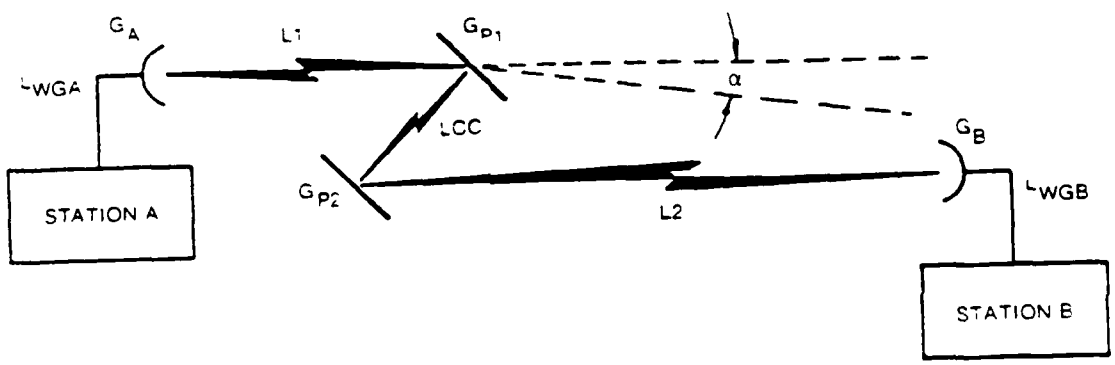

Figure 5-34. Double billboard passive repeater applications used where α is less than 50 degrees.

Passive repeater gain calculations are somewhat complicated. For single billboard paths, calculations are simple if the billboard is in the far field of each end of the path. The following equation is used to determine whether the passive repeater is in the far or near field of a station:

$$1/k = \pi\lambda D/4A$$

where

λ = wavelength = 300/f (MHz),

D = distance between the antenna and the passive repeater, and

A = effective area of the passive repeater.

If 1/k is greater than 2.5, the repeater is in the far field; if 1/k is less than 2.5, the repeater is in the near field. Figure 5-35 graphically illustrates the near-, far-field concept.

If the passive repeater is in the far field of the terminal, the passive gain may be computed by

$$G_p = 20 \log \left(\frac{4\pi A \cos a}{\lambda^2} \right)$$

where

G_p = passive gain in dB,

λ = wavelength in the same units as A,

A = area of the passive repeater in the same units as λ, and

a = one-half the included angle between the paths.

Figure 5-36 graphically illustrates the gain for both paths as a function of the above parameters.

When the passive repeater is so close to one end that it is in the near field of the antenna, the antenna and reflector gains are no longer independent, but react with each other in such a way that the net gain is reduced. In this case, the previous equation cannot be used to calculate the gain of both paths, and alternative methods must be used. One way of computing the near-field situation is to treat the antenna and the nearby passive repeater in the same fashion as a periscope antenna system. In this case, a correction factor is calculated and applied to the gain of the antenna to obtain the net gain of the periscope combination. Since this gain is referred to the location of the reflector, the path in this method is simply that from the reflector to the distant end. The shorter path simply disappears from the calculation. Figure 5-14 provides curves for deriving a periscope correction factor. An alternative method of handling the near-field situation is provided by the curves of figure 5-37, which are an adaptation from the curves of figure 5-14. Figure 5-37 is used to find a gain reduction factor which, when applied to the two-way, free-space passive gain, yields the equivalent net gain when the problem is treated on a two-path basis. The big advantage of this approach is that it allows the passive repeater to be shown in the same way (as a separate location) and treated in the same way on the path calculation sheets, whether it is in the far field or the near field.

In the double billboard passive case (figure 5-34), the two-way, free-space gain for the combination of the two billboards is equal to the two-way, free-space gain for the effective area of the smaller of the two billboards, less a reduction in gain that can be calculated from the curves illustrated in figure 5-38. If the double passive billboards are close to one end of the path, near-field correction must also be applied.

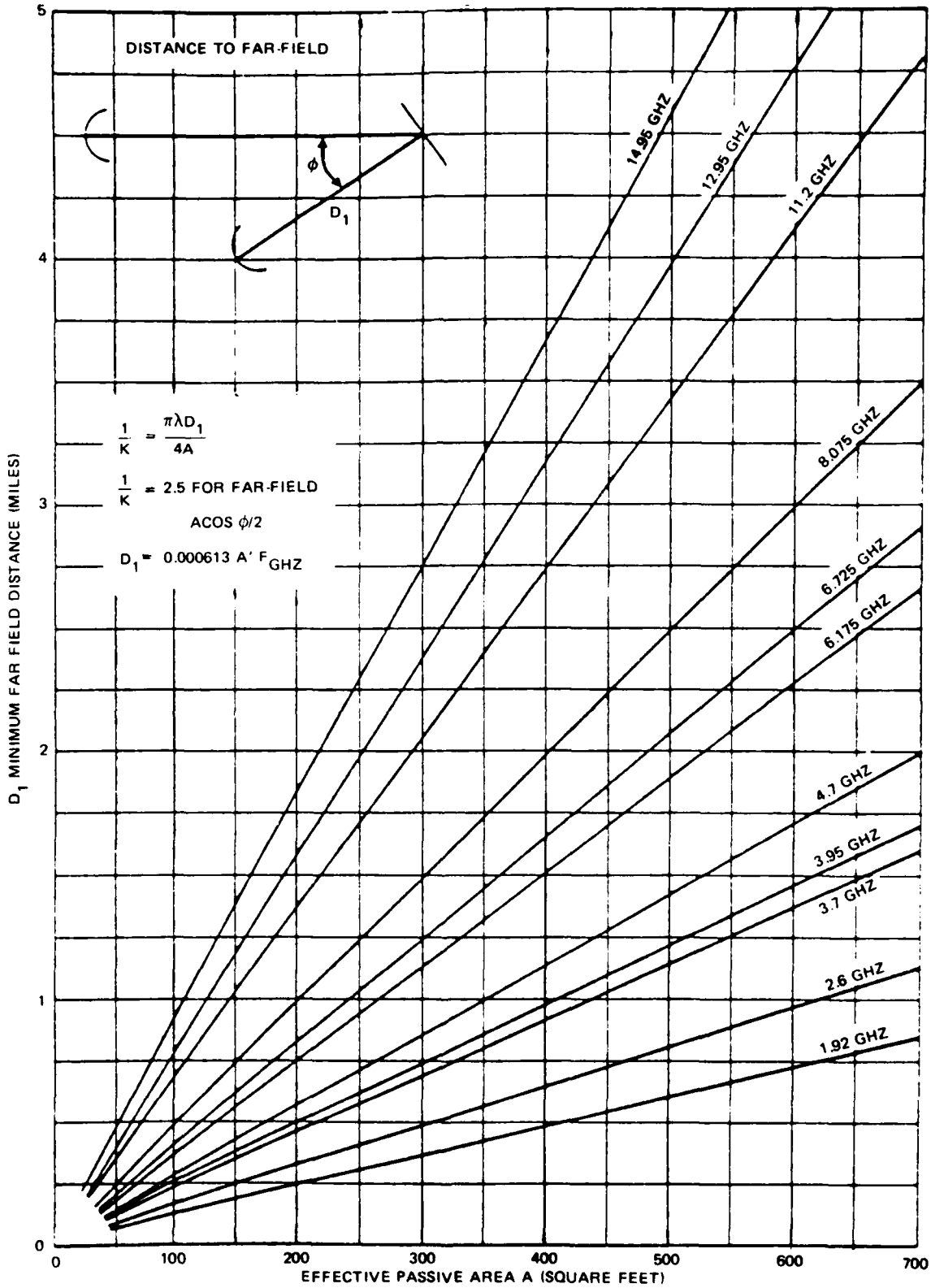

Figure 5-35. Passive repeater far-field distance.

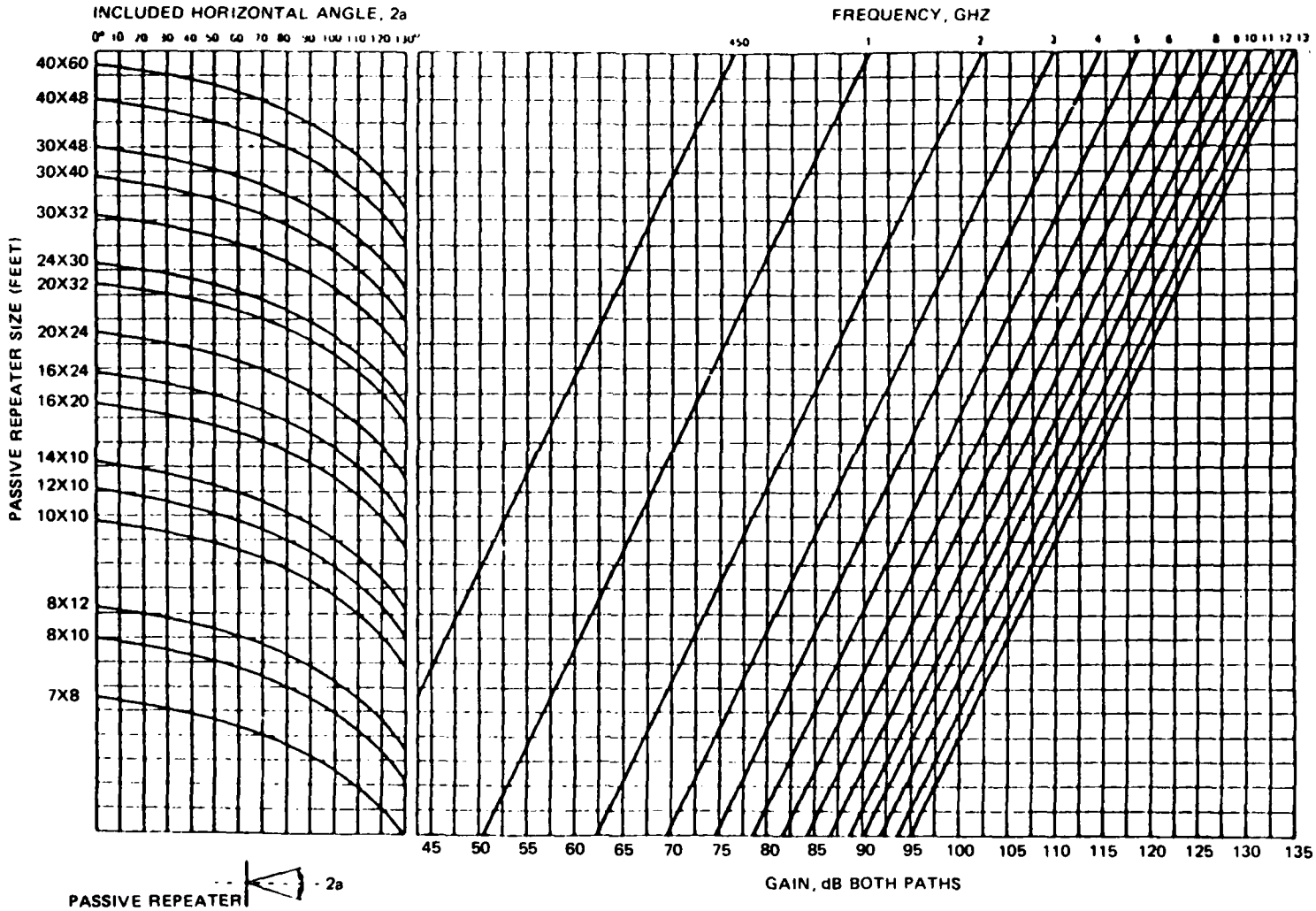

$$\text{GAIN FOR BOTH PATHS} = 20 \log \frac{4\pi A \cos a}{\lambda^2}$$

A = PASSIVE REPEATER AREA, SQ FT
2a = PASSIVE HORIZONTAL ANGLE, DEGREES
λ = WAVELENGTH, FEET

Figure 5-36. Passive repeater gain.

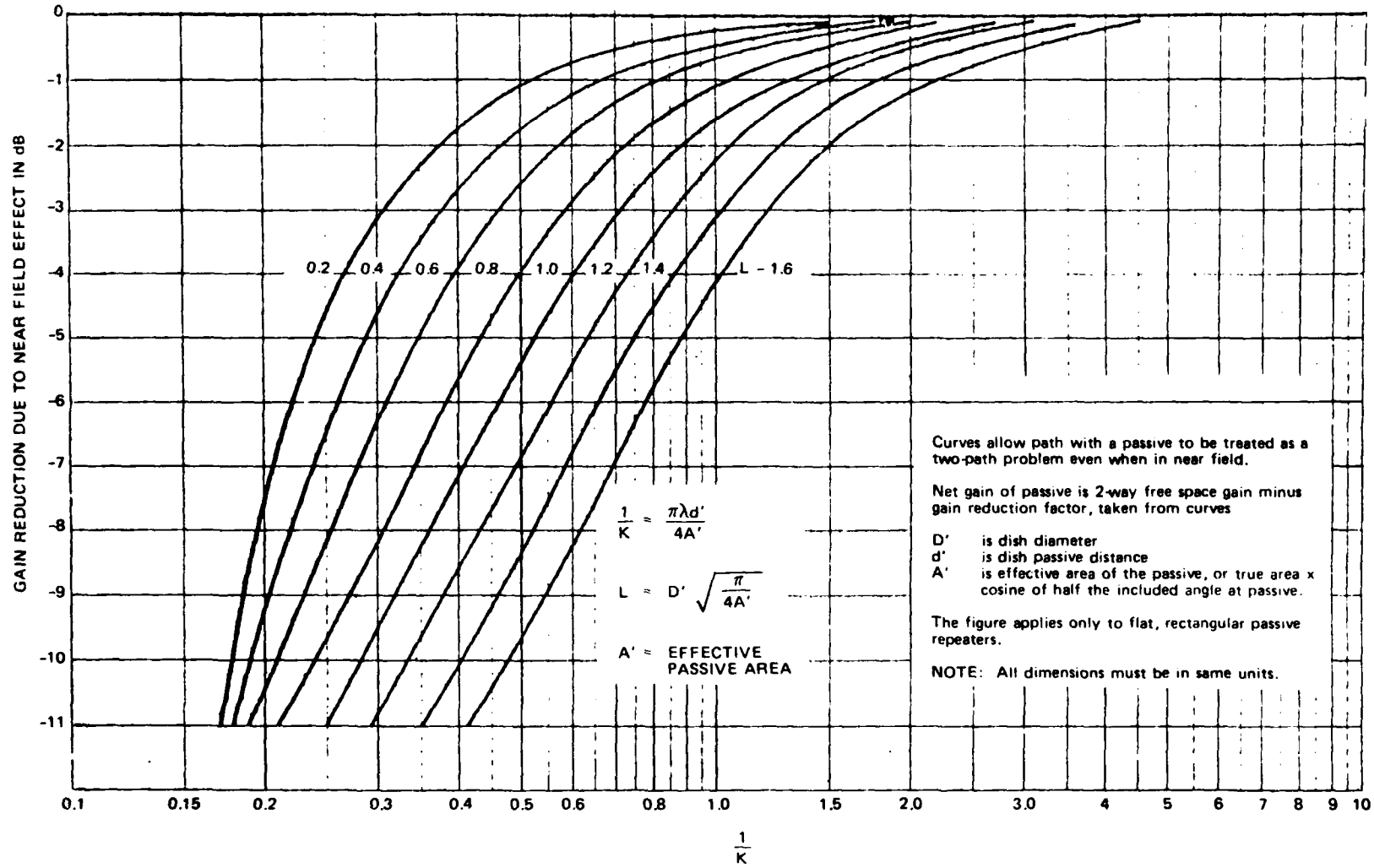

Figure 5-37. Passive repeater gain correction when repeater is in near field.

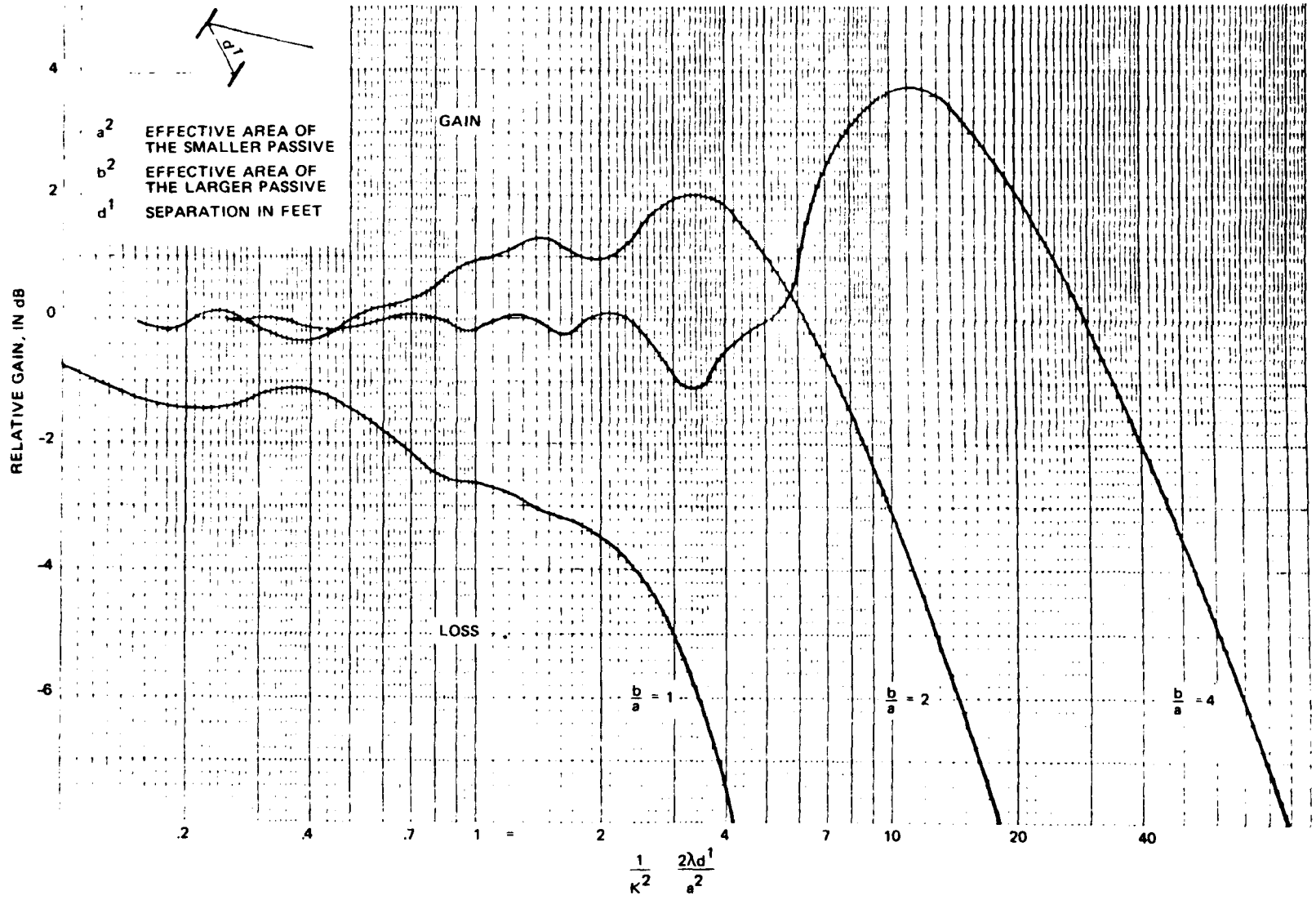

Figure 5-38. Double passive repeater efficiency curves.

5.7 Uninterruptible Power Systems. Microwave communications systems require dc power sources that provide reliable and stable service. Because of the expense of downtime associated with a system, a great deal of attention should be directed toward the power system associated with the communications network. The design of dc power systems usually takes into account the following elements:

a. Battery.

b. Battery charger.

c. Battery eliminator.

d. Inverters.

e. Dc-to-dc converters.

f. Standby engine/generators.

The topics discussed in depth within this subsection will be limited to the first two items only. The other components are listed for reference and are discussed in other texts listed in appendix B.

The ordinary dc voltages used in most microwave communications systems evolved from the original needs of the telephone industry. Early manual exchanges used dc power at 24 volts to operate various telephone apparatus, while telegraph equipment required 130 volts. Dial telephone exchanges operate at 48 volts, thus establishing three dc voltages that have become standard throughout the communications industry. Since new equipment introduced into the communications industry must be compatible with existing equipment, it must be designed to operate from standard dc voltages. Most microwave equipment employed today is solid-state; therefore, power sources are limited to either 24 or 48 volts for transmission facilities.

Figure 5-39 illustrates a typical dc power plant. As shown in the diagram, ac power is supplied from either a commercial power source or an engine/generator. In the event commercial power is available, it is used by the chargers during normal operation, and a backup engine/generator may be used to maintain the ac voltage during periods of power outage. Switching between the two sources is accomplished by either an automatic or manual power transfer switch. The battery chargers shown in figure 5-39 are presented in a redundant configuration. The chargers rectify and regulate the ac power so stable dc power may be supplied to the load (RF racks, multiplex, etc). The term battery charger is actually a misnomer, since its primary purpose is to rectify the ac and supply it to the load. A more accurate term would be voltage rectifier, since its use as a charger is secondary.

In addition to providing a dc source for the equipment during periods of normal operation, the chargers also maintain the batteries in fully charged condition. This action, called floating, is accomplished by connecting the batteries in parallel with the output of the charger.

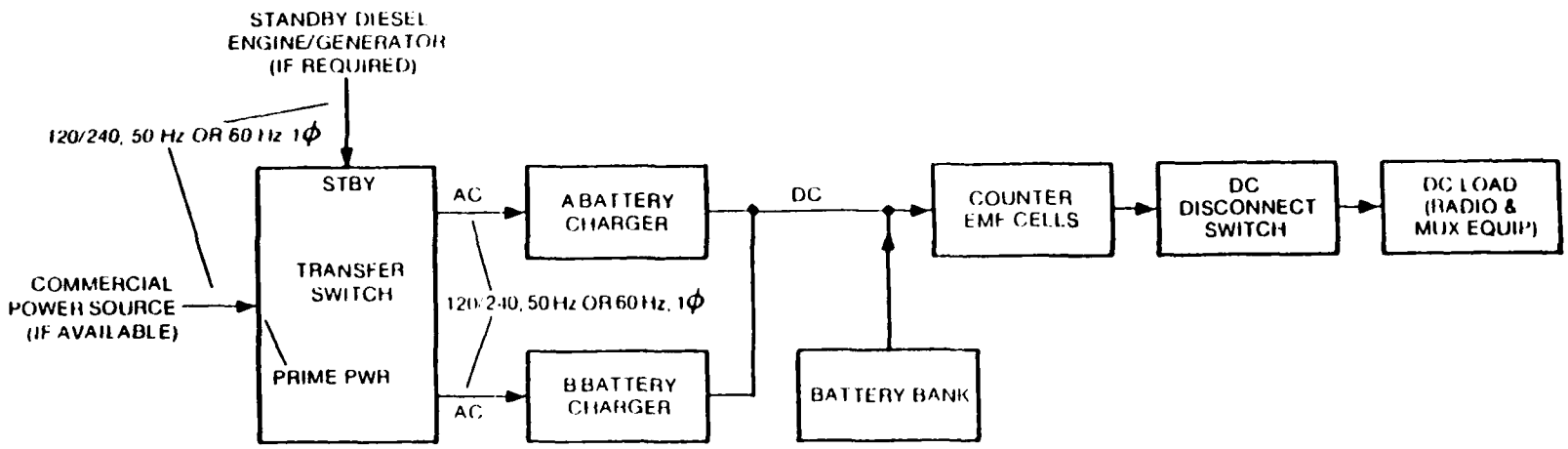

Figure 5-39. DC power plant diagram.

Provided between the output of the charger and the load are counter EMF (CEMF) cells, as well as a low voltage disconnect switch. The function of the CEMF cells is to act as a voltage dropping device during periods of voltage fluctuations in the line, thereby providing a regulated source of dc power to the load. The LVLD panel disconnects the battery from the load in the event overdischarge is eminent.

Two other sources of power are often provided for additional loads requiring no-break ac and dc voltages. An inverter takes 24- or 48-volt dc, chops it, and provides an ac output. A dc-to-dc converter accepts 24- or 48-volt dc and converts it to a different dc level for other system requirements.

5.7.1 Batteries. Two general categories of batteries are used in communication dc power systems: acid electrolyte types (lead-acid) and alkaline electrolyte types (silver-zinc, nickle-cadmium, nickle-iron). The most common form of storage battery used in dc power systems is the lead-acid battery. This battery will last longer, require less maintenance, and need less power than any other type of battery. A fully charged lead-acid cell has a positive electrode (or plate) made of lead peroxide (PbO_2) and a negative electrode made of spongy lead (Pb), both submerged in an electrolyte of dilute sufuric acid ($H_2SO_4 + H_2O$).

When a lead-acid cell is discharging, current passes from the positive plate through the external circuit (load) to the negative plate and returns to the positive plate through the electrolyte. Electrolysis occurs in the cell as a result of the electric current passing through it. During this process, the spongy lead of the negative plate is combining with the positively charged component (SO_4) of the electrolyte, forming lead sulphate ($PbSO_4$) and causing the negative plate to lose some of its negative charge. At the same time, the oxygen of the lead peroxide of the positive plate is combining with a part of the hydrogen in the electrolyte, forming water (H_2O) and also reducing the positive plate to pure lead (Pb). In addition, electrolysis is taking place at the positive plate, forming more water and converting some of the lead into lead sulphate. When a lead-acid cell is charging, the chemical action is reversed, thus restoring the chemical energy released during discharge. The chemical action in a lead battery is expressed by

$$PbO_2 + Pb + 2H_2SO_4 \underset{\text{CHARGE}}{\overset{\text{DISCHARGE}}{\rightleftarrows}} 2PbSO_4 + 2H_2O$$

Lead used to construct the plates in a lead-acid cell is relatively soft and does not possess much structural strength. For this reason, alloys of lead are used to provide the necessary mechanical strength. The most prevalent type of alloy in lead-acid batteries used today is lead-antimony. Recently, another type of alloy, lead-calcium, has proven to be an excellent material for constructing cell plates. Lead-calcium batteries have a much longer expected operating life than lead-antimony batteries (about 40 percent longer) and require less maintenance. However, they are more expensive initially and are not necessarily the most economical batteries to maintain in all applications.

Since they require less maintenance and attention than the lead-antimony batteries, they are very useful at remote, unattended stations.

A lead-acid battery can be maintained at full charge by placing its terminals across a dc power source (floating). The open circuit voltage of a typical lead-acid cell that is fully charged is about 2.05 volts. To float a battery and maintain it in a fully charged condition, it is necessary to raise the float voltage above 2.05 volts to overcome the cell resistance. Under normal temperature conditions, the average voltage of the float charge is about 2.17 volts per cell. A second type of charge, the equalizing charge, is a special charge given a battery to raise all of its cells to a uniform, equal voltage and specific gravity. Each cell in a battery has its own individual characteristics such as rate of local action (self-discharge), rate of charge, and capacity. Although differences among cells are usually very small, over a long period of time it is possible for an imbalance in cell voltages and specific gravity of the electrolyte to become quite pronounced. The equalizing voltage is usually about 2.30 volts per cell. Equalizing charges are also used to recharge a battery after it has been discharged during emergency use. Figure 5-40 illustrates these voltages under various operating conditions, while table 5-15 summarizes the numbers of cells and total voltage for the system.

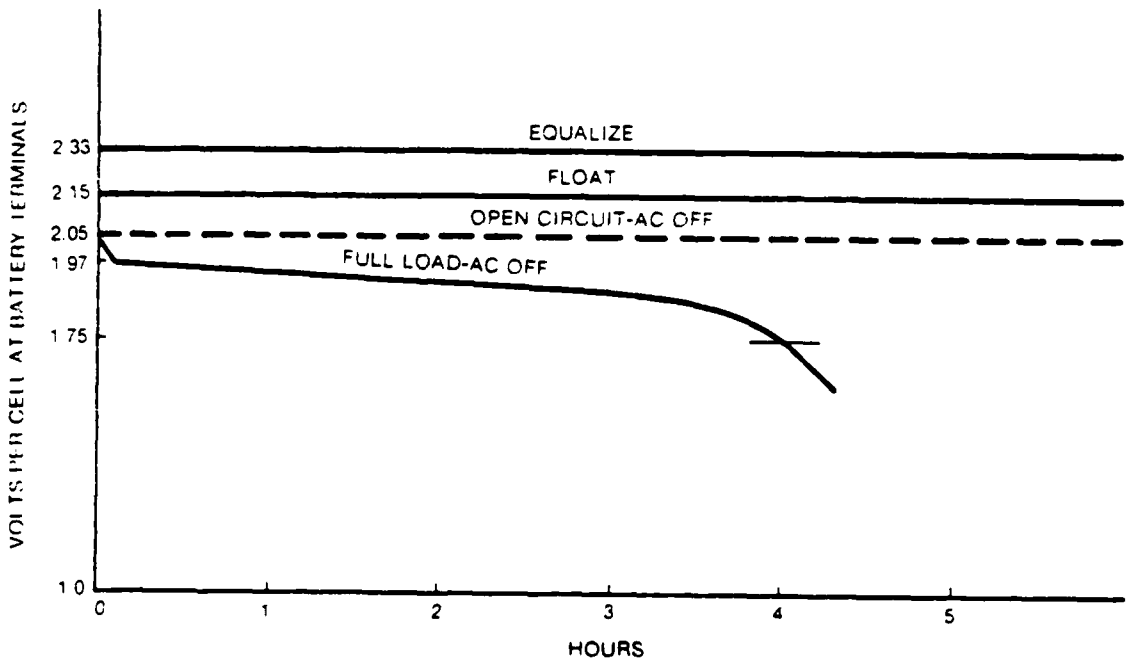

Figure 5-40. Behavior of battery cell under various conditions.

TABLE 5-15

TYPICAL STANDARD POWERING SYSTEMS

Nominal System Voltage	Usual No. of Cells	Float Voltage	Equalizing Voltage	Cutoff Voltage
130	60	129	140	105
48	24	51.6	55.9	42.0
24	12	25.8	28.0	21.0

One of the most important systems engineering considerations in dc power plant selection is the proper sizing of the batteries. In order to adequately specify batteries for the application, the following parameters must be determined:

a. The current the battery will be called on to deliver.

b. The time the user requires the battery to deliver the current (usually 8 hours).

c. The cutoff voltage per cell by which the battery will be sized (usually 1.75 to 1.85 volts per cell).

d. The lowest temperature at which the battery will be required to operate.

e. The amount of time required to recharge the battery to sufficient potential so it may perform another duty cycle.

Knowing these parameters will then allow the systems engineer to determine the ampere hours (AH) required of the battery. The following steps illustrate the calculations required to properly size the battery:

a. Determine number of cells from table 5-15.

b. Determine cutoff voltage per cell by dividing cutoff voltage by number of cells.

c. Determine amperes required per positive plate based on total hourly discharge time (usually 8 hours). This can be found by referring to curves for a specific battery. Figure 5-41 is an example of curves for an Exide lead-calcium battery.

d. Determine number of positive plates required by dividing the total load in amperes by the number of amperes per positive plate.

e. Determine total number of plates required (i.e., number of negative plates per cell is one more than the number of positive plates).

f. Determine AH capacity by the following:

$$AHR = T \times AHP \times N$$

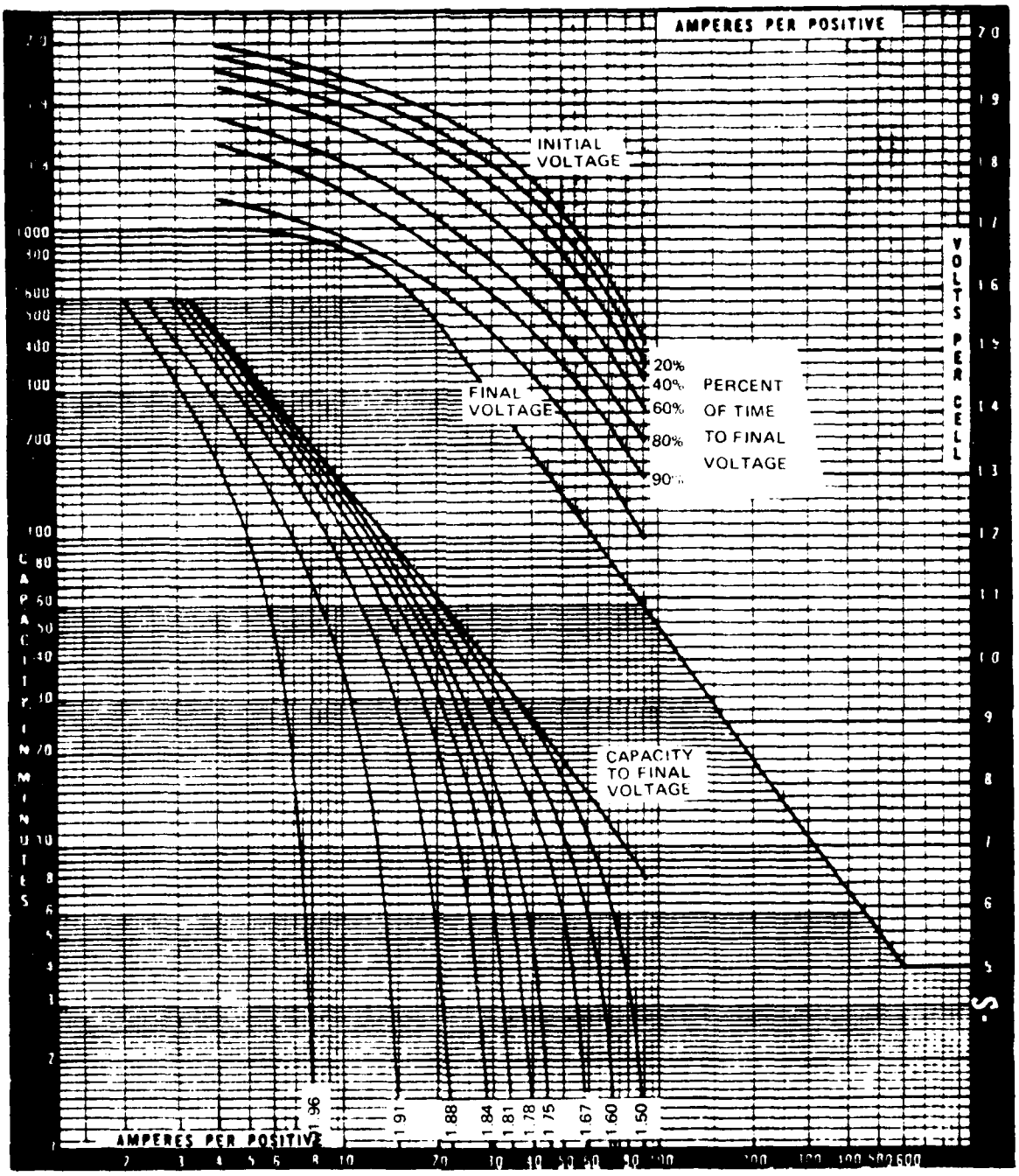

Figure 5-41. Average capacity of mean size cells including connection.

where

AHR = ampere hours required,

T = discharge time required,

AHP = amperes per positive plate, and

N = number of positive plates required.

When this AH rating has been computed, any derating due to temperature must also be introduced to obtain final results. Since a battery is normally rated at 77°F, this AH figure may not reflect its true performance. A lower than normal temperature may adversely affect the AH rating of a battery, while a higher than normal temperature may increase battery performance ratings. These variations are caused by the effects of temperature on the specific gravity of individual cells. Table 5-16 lists the time alterations that may be considered at temperatures other than 77°F when calculating battery AH capacity.

TABLE 5-16

TIME ALTERATION FOR LEAD-ACID BATTERIES
BASED ON HIGH AND LOW TEMPERATURES

Rating Time	32°F (0°C)	40°F (4.4°C)	55°F (12.8°C)	85°F (29.4°C)	100°F (37.8°C)	120°F (48.9°C)
1 Min	68%	74%	84%	106%	113%	121%
60 Min (1 Hr)	71%	77%	87%	104%	110%	116%
180 Min (3 Hr)	72%	78%	88%	103%	108%	113%
480 Min (8 Hr)	73%	78%	88%	103%	107%	112%
720 Min (12 Hr)	73%	79%	89%	103%	107%	111%
1440 Min (24 Hr)	74%	80%	89%	103%	107%	108%

Once the AH rating has been found, the figures may be conveniently checked with figure 5-42, which graphically illustrates the battery sizes required as a function of total load and rundown time required. In this case, the rundown time is 1.84 volts per cell, which is slightly higher than the 1.75 volts per cell normally used. Thus, by using figure 5-42, a slight "fudge factor" is built in to ensure adequate battery size.

5.7.2 *Battery Chargers.* *The battery charger selection process is also an integral* task of the systems engineer designer. The battery charger used must be capable of recharging the battery, maintaining it in a state of full charge (float), and simultaneously supplying the current requirements of the load. Three considerations should be researched before selecting a charger: proper regulation of its output, current limiting of the output, and filtering of its output.

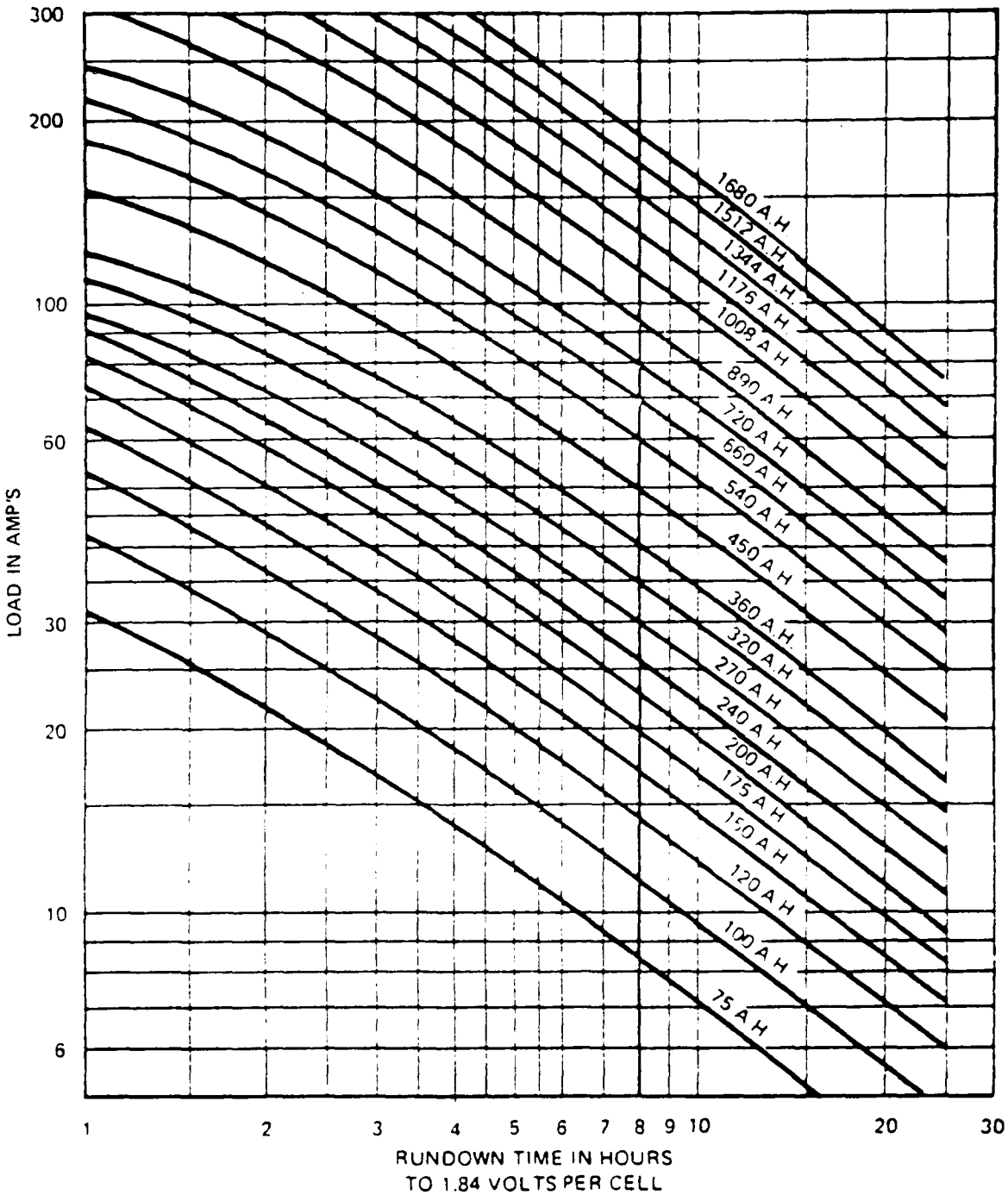

RUNDOWN TIME IN HOURS TO 1.84 VOLTS PER CELL

Figure 5-42. Battery sizing chart.

The power regulation of a charger is important to the welfare of the batteries. A fluctuating charging voltage may adversely affect the total life of a battery system. The voltage regulation should be maintained within 0.5 to 1 percent of rated value for optimal battery performance. Also, current limiting is required so charger and battery damage will not occur due to system failures.

Filtering must also be incorporated into the charger so equipment will not be damaged. The ac ripple on the dc output is of little consequence to the battery system, but may adversely affect the performance of the communications equipment. Therefore, it is advisable to select a charger that filters the ripple to less than 0.5 percent of the dc output voltage.

5.7.2.1 Basic Types of Chargers. Three basic types of chargers are used today: resonant, magnetic amplifier (mag-amp), and silicon-controlled rectifier (SCR). The resonant charger circuit, shown in figure 5-43, is the simplest type. The essential circuit element is a ferro-resonant step-down transformer, whose output voltage remains constant despite wide variations in the applied input voltage. This constant output (secondary) voltage is rectified in a full-wave or bridge silicon diode circuit, filtered, and applied to the load.

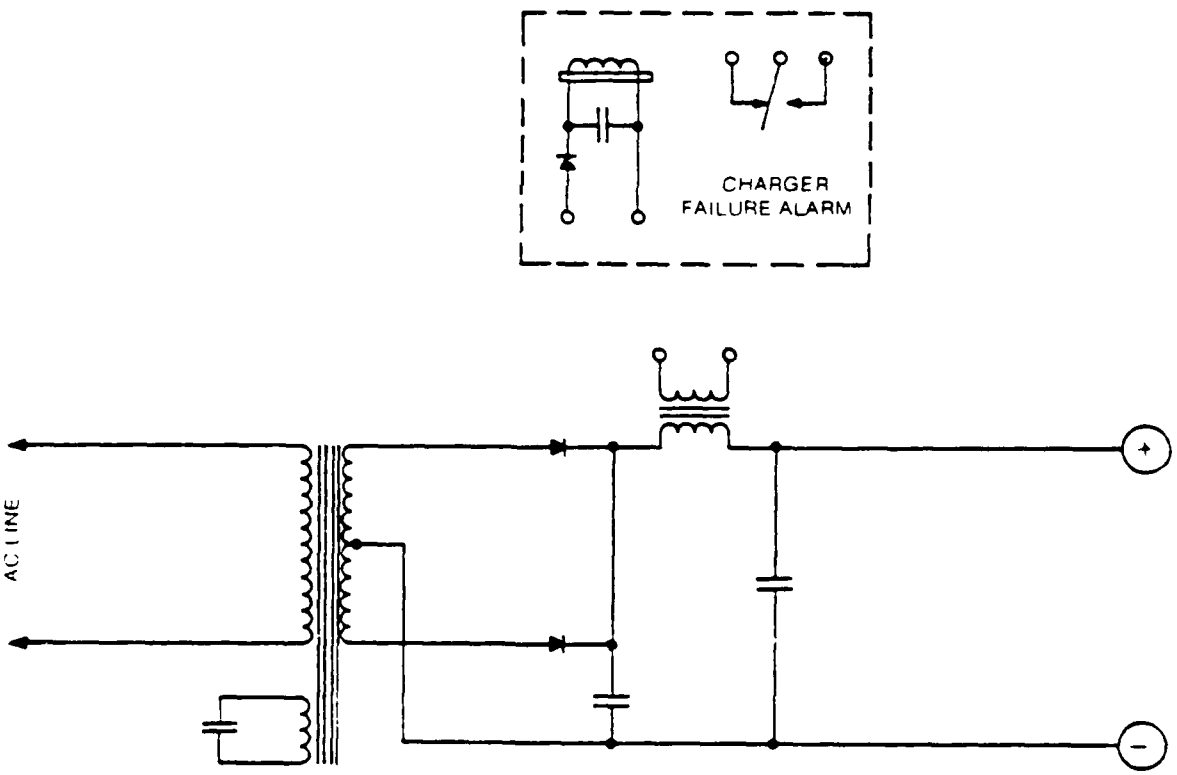

Figure 5-43. Resonant charger circuit.

The advantages of the resonant technique are directly related to its simplicity. Chargers using this regulation method are inexpensive and relatively small and lightweight. The penalties for this simplicity, however, may be severe. The resonant charger is sensitive to variations in the input ac line frequency, and output voltage will vary approximately linearly with frequency in the ±5-degree range. Beyond this frequency range the system becomes unusable, because regulating action for the power transformer depends upon the current developed in its resonant winding to establish the correct core saturation operating point.

The mag-amp circuit, shown in figure 5-44, employs variable impedance inductors in series with power rectifiers. This is a closed-loop control system, the inductors being varied in accordance with an error signal derived by comparing the output voltage to a reference voltage established by a temperature-stable zener diode. Adjustment of output voltage is readily accomplished, and load sharing features are easily incorporated. Also, the iron core components can be designed to accommodate wide variations in ac line frequency with no effect on regulation. It should be noted that, while figure 5-44 illustrates the control inductors (mag-amp) placed in series with the power transformer secondary, they could be designed to work equally well on the primary side in series with the line.

The SCR charger is illustrated in figure 5-45. The essential elements of this design are very similar to the mag-amp design, except that power control inductors are not employed, and the diodes are replaced with SCRs. The SCR charger has the same advantages as the mag-amp charger and is generally a simpler design that provides a smaller, lighter unit.

Each of the three types of charger circuits has different advantages and disadvantages. Application of the particular charger should be analyzed before final selection is made.

5.7.2.2 Charger Configurations. Two basic systems configurations are used for chargers: load sharing configuration and redundant (standby) configuration. Load sharing is the application of two or more chargers connected to a common output bus to share the load relative to their respective capacity ratings. In this configuration, a multiplicity of chargers may be interconnected to simultaneously supply current to a common load. In the usual load sharing configuration, two equal capacity chargers are paralleled and adjusted so that each shares one-half of the total load. Chargers of different capacities can also be paralleled and adjusted to share the load commensurate with their capabilities. For example, a 100-ampere unit and a 50-ampere unit can be adjusted so that the total load is divided on a three-part basis, the large unit taking two-thirds and the small unit one-third. Redundant configuration places the full load on one charger, with the standby charger being activated only upon failure of the primary unit.

5.7.2.3 Charger Alarms. Four alarms are used on most chargers: low dc voltage, high dc voltage, ac power failure, and rectifier failure. If these alarms are not standard, they may be ordered as options, and it is usually advisable to do so from a maintenance standpoint.

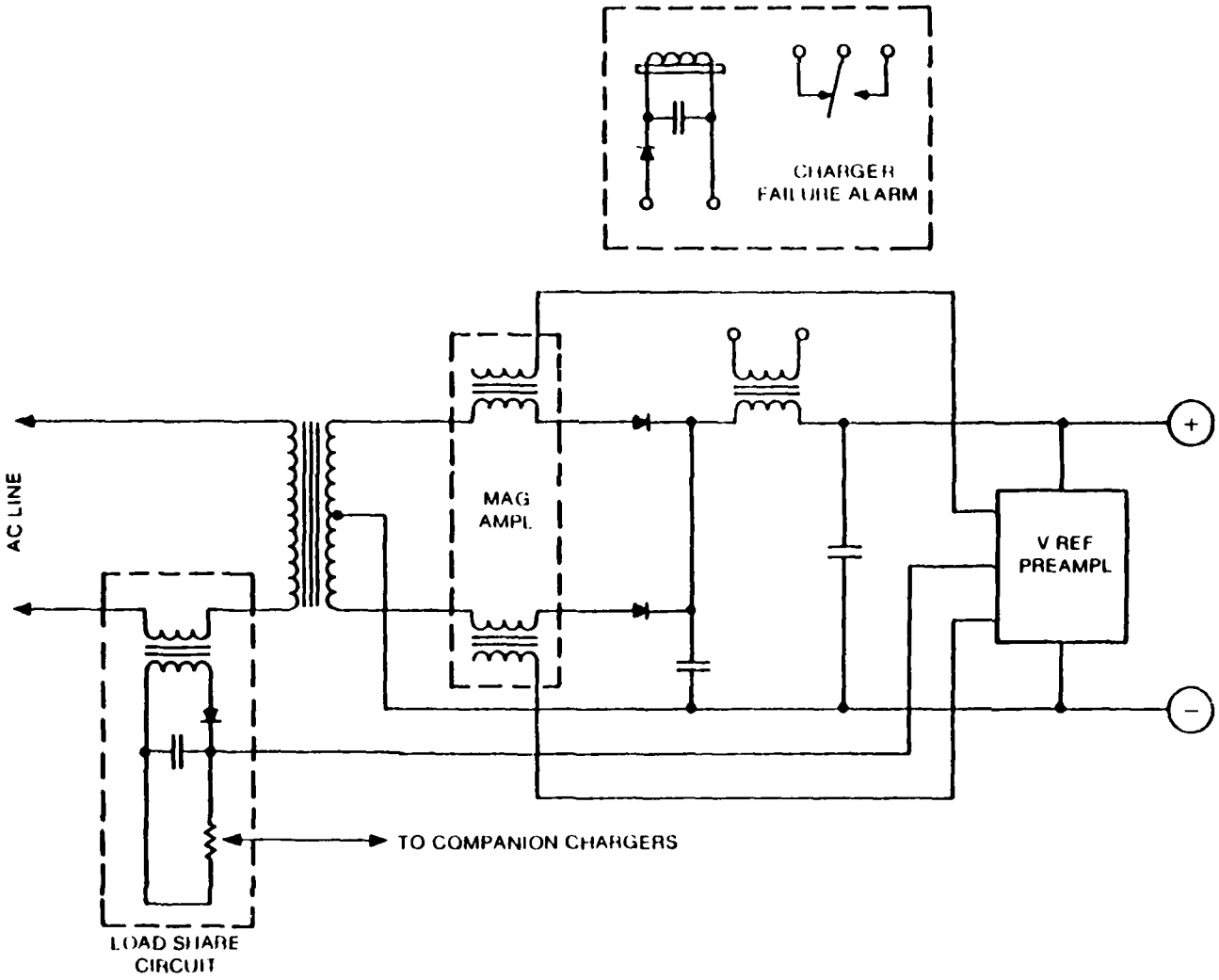

Figure 5-44. Magnetic amplifier (mag-amp) charger circuit.

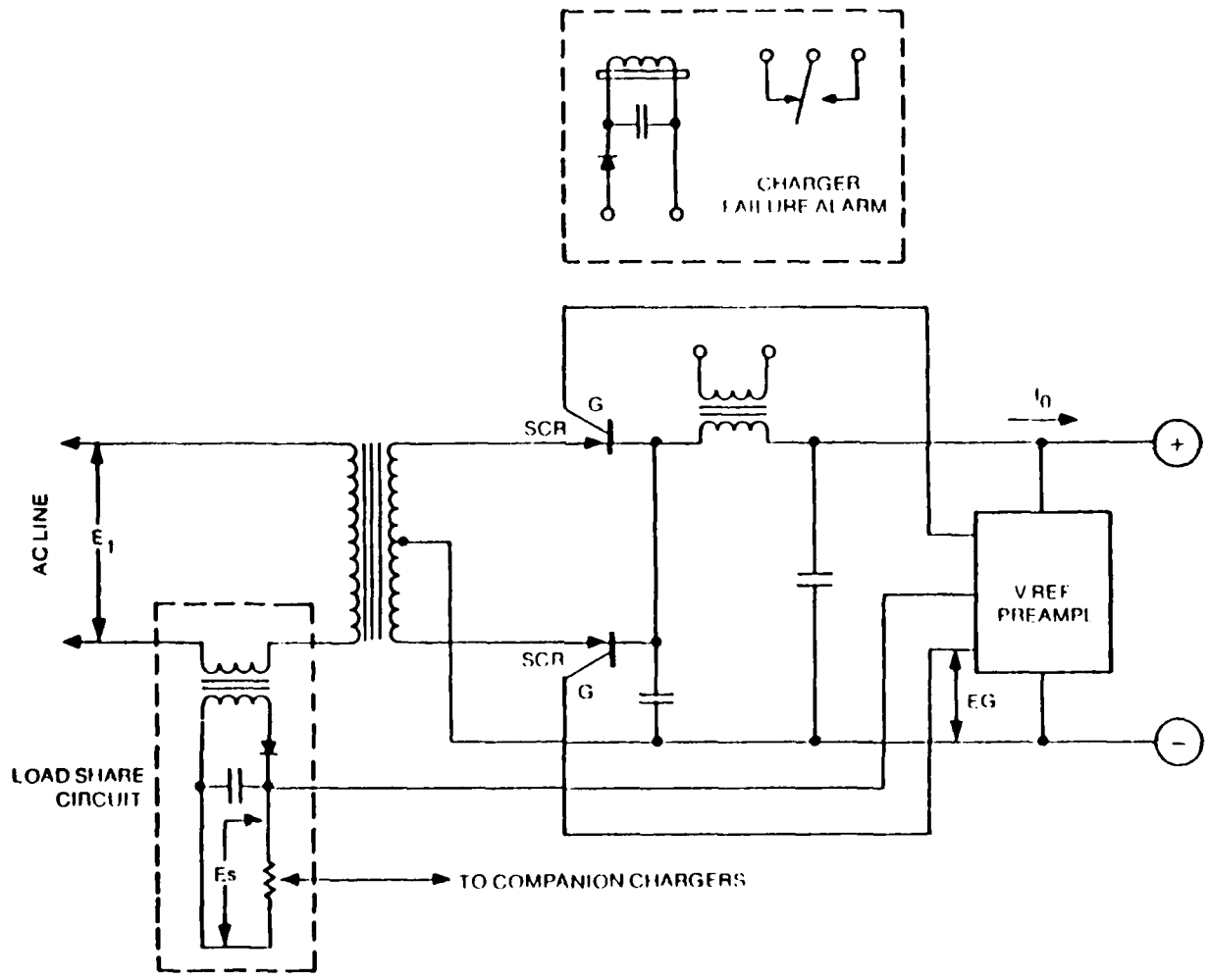

Figure 5-45. Silicon-controlled rectifier (SCR) charger circuit.

5.7.2.4 Charger Sizing. Another important consideration is adequate sizing of the charger. The charger size, expressed in amperes of dc output capacity, must be capable of recharging the batteries at the highest selected system voltage while simultaneously serving the connected electrical loads. Figure 5-46 graphically illustrates the required charger size as a function of recharge time. The equation below is used to select the proper charger size.

$$A = \left(\frac{AHR \times 1.10}{T} + L\right) \frac{1}{K_1} \times \frac{1}{K_2}$$

where

A = ampere capacity of charger (but not less than 20 percent of the 8-hour discharge rate of the battery),

AHR = ampere-hours removed from battery,

1.10 = charger conversion factor for lead-acid cells,

K_1 = temperature derating factor (see table 5-17),

K_2 = altitude derating factor (see table 5-17),

T = maximum number of hours specified for recharging, and

L = continuous load on charger and battery during recharging.

TABLE 5-17

TEMPERATURE AND ALTITUDE DERATING

Temperature	K_1 Factor	Altitude	K_2 Factor
To 104°F	1.00	To 3,000 ft (1,000 m)	1.00
To 122°F	0.83	To 5,000 ft (1,500 m)	0.94
To 140°F	0.64	To 10,000 ft (3,000 m)	0.82

5.7.3 Counter EMF (CEMF) Cells. During transition periods from float to equalize and from float to battery conditions, there may be sharp variations in the dc voltages. Also, when the ac power to the charger is off and the batteries are supplying power to the load, a device is required to regulate the voltage across the load so constant potential is maintained. For these purposes, a CEMF cell should be used for voltage regulation in all communications dc power systems. This section describes three basic types of CEMF cells: steel alkaline, selenium stack, and transistorized.

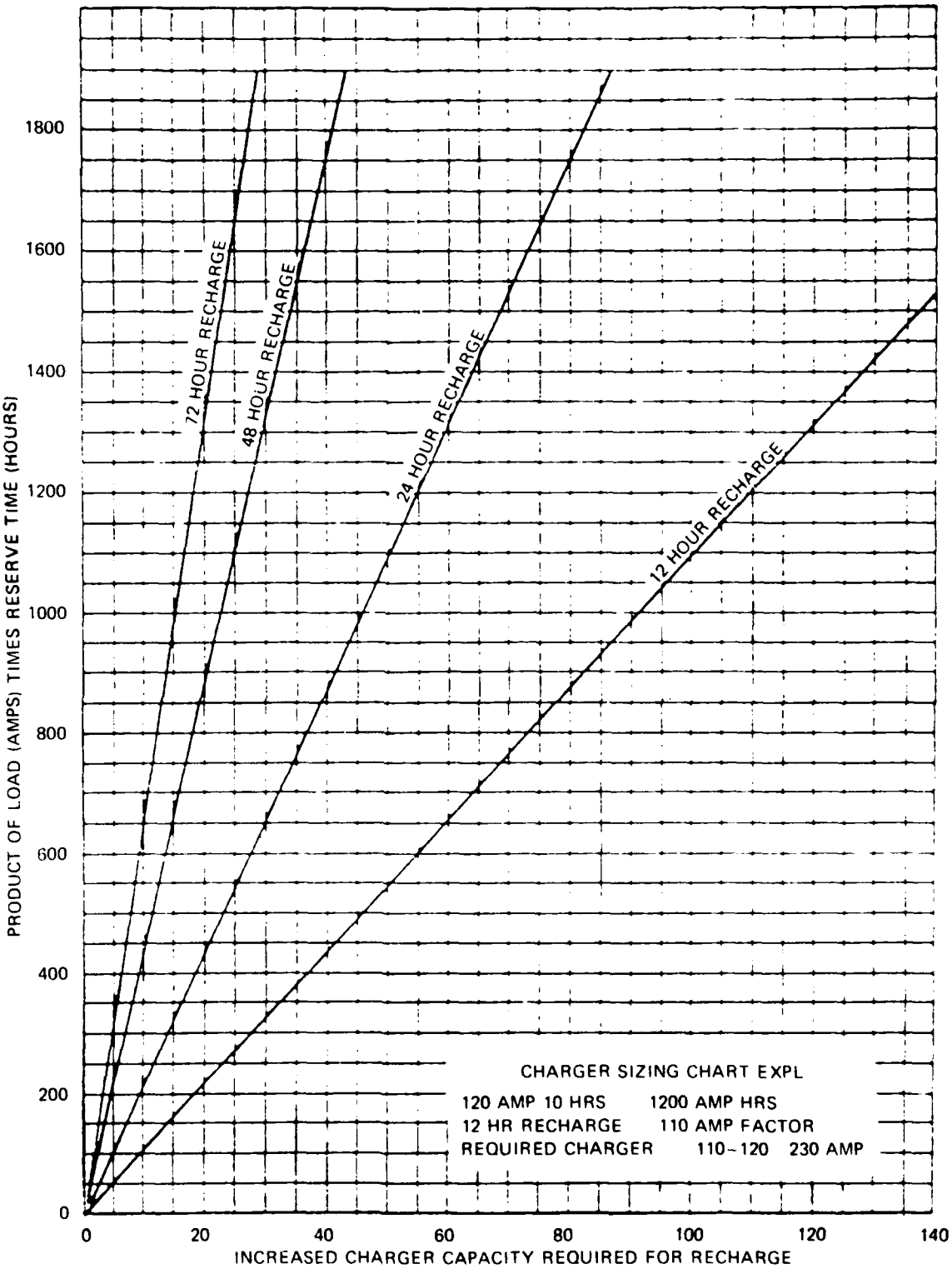

Figure 5-46. Battery charger sizing chart.

The steel alkaline CEMF cell has been widely employed in the past. It is a wet cell, consisting of two sets of stainless steel plates immersed in an electrolyte. The cell is bipolar (i.e., will work in either direction). Current passing through the cell decomposes the water of the electrolyte solution into hydrogen and oxygen, which escape from the cell through the open vent hole in the cover and the ventilating spaces between the jar and the cover. The reaction lowers the level of the electrolyte solution, and distilled water must be added at relatively frequent intervals.

The selenium stack CEMF cell consists of several high-current capacity selenium devices. These dry voltage regulating devices are capable of providing effective service over long time periods. Overload and surge current characteristics of these devices are somewhat limited and generally lower than those of the steel alkaline and transistorized CEMF cells.

The transistorized CEMF cell uses the drop across a power transistor as its regulating element. This drop, which is fairly constant for wide variations in current flow, provides good regulation. Special adjustment features are typically incorporated in these cells to enable various fixed drops to be obtained. For example, a 2.5-volt cell may also be adjusted to provide drops of 1.3 or 1.9 volts. Additional adjustment features provide the capability to set the cells for any nominal fixed load current within 20 to 80 percent of their range. This feature is especially useful in applications where anticipated future changes in station equipment might substantially increase or decrease the nominal load current.

All three types of CEMF cells are usually mounted in a rack along with other charger equipment. It is therefore desirable to specify the CEMF cells to the manufacturer supplying the charger equipment. If all requirements are specified for a particular application, battery charger racks may be prewired and made ready for installation by the vendor.

APPENDIX A

PACIFIC MISSILE TEST CENTER DIGITAL COMMUNICATIONS

An all-digital, bulk-encrypted microwave system was procured during FY 80-82 to replace the existing analog voice and data portion of PMTC's Instrumentation Data Transmission System. There will be an operational overlap of the old and new systems. Digital service from Point Mugu to Laguna Peak and to San Nicolas Island (SNI) began in November 1982. The 65-mile path from SNI to Laguna Peak is one of the longest 45-megabit microwave links in the world. Rockwell and PMTC are developing techniques for improving the reliability on this path. Digital service to Santa Cruz Island (SCI) and to Vandenberg Air Force Base (VAFB) will begin approximately one year later. Total cost of this effort was about $5 million for contracted equipment and systems. The digital systems provide 460 voice and data channels to SNI, 144 to Laguna Peak, 110 to SCI, and 108 channels to VAFB. In addition, a DS-2 (6.3 megabit) port will be available from SNI through Point Mugu to VAFB for Peacekeeper and other high bit rate data transmissions. Figures A-1 through A-7 illustrate some features of the system. System architecture is similar to the Washington Area Wideband System (WAWS), but uses products from the Collins Transmission Systems Division of Rockwell, International. Significant features of the system and major design decisions are described in the following paragraphs.

Channel Banks. The system channel banks are of the "single codec per channel" design, permitting any intermix of voice and data channels. The 50 kilobit Extended Area Test System (EATS) data channels, the 51.3 kilobit Integrated Target Control System (ITCS) channels, and the KY-3 and KY-28 secure voice channels use special channel cards, which Rockwell developed for PMTC and is now selling to other government and private users.

Switching System. The system was designed for future integration with an all-electric switching system. The eventual switching system integration and distributed channel bank installation will save cable pairs and provide a simpler and more flexible distributed communications system.

Compatibility. The system has a fully remote fault reporting subsystem compatible with future plans for automated data logging and analysis. Components of the system, whether taken from the product line or custom designed, are engineered to commercial interface standards for maximum flexibility of system design and maximum application. Therefore, the fullest possible compatibility with off-the-shelf test equipment, test procedures, and other telecommunications products from all industry sources is assured.

Encryption. The system is bulk-encrypted "for transmission only" using KG-81 encryptors. The basic system is unclassified. Secure data must be encrypted in a secure manner before transmission over the bulk-encrypted microwave system, as the KY-3 and KY-28 secure voice circuits will be.

System Bit Rate. Three digital microwave system configurations can be purchased for implementation. The "three-level-partial-response" approach multiplexes

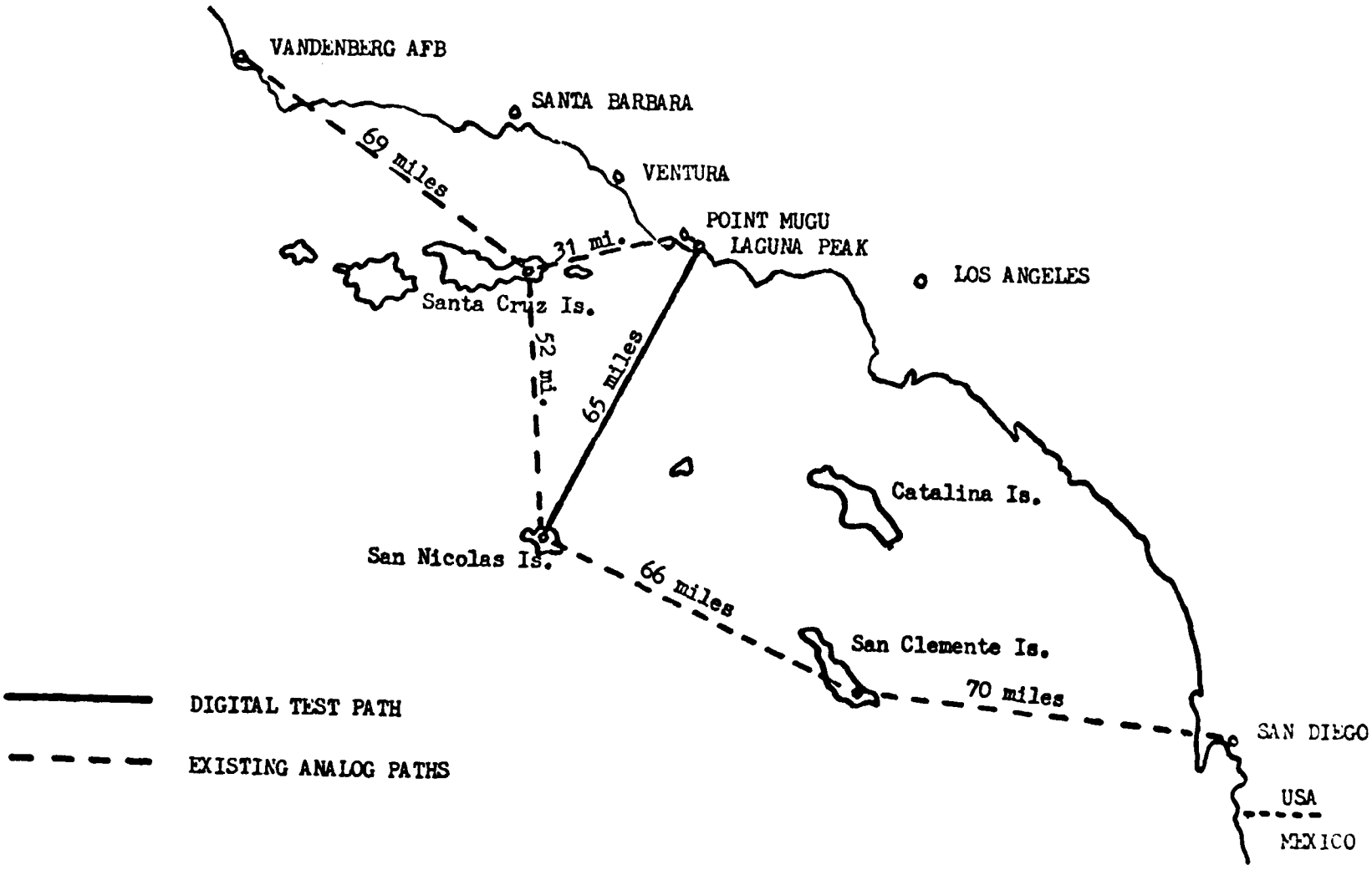

Figure A-1. Southern California offshore microwave paths.

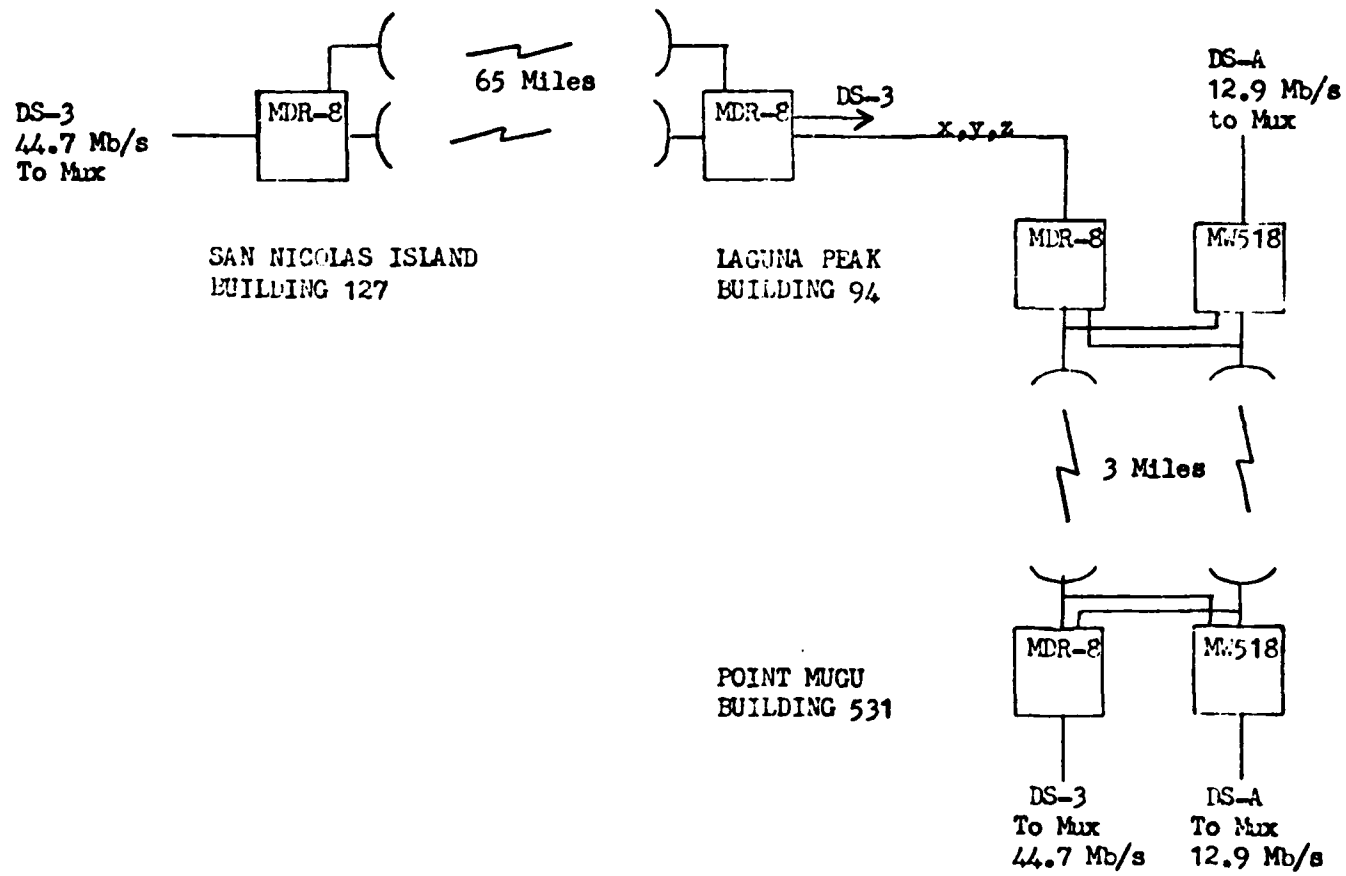

Figure A-2. San Nicolas Island digital microwave system.

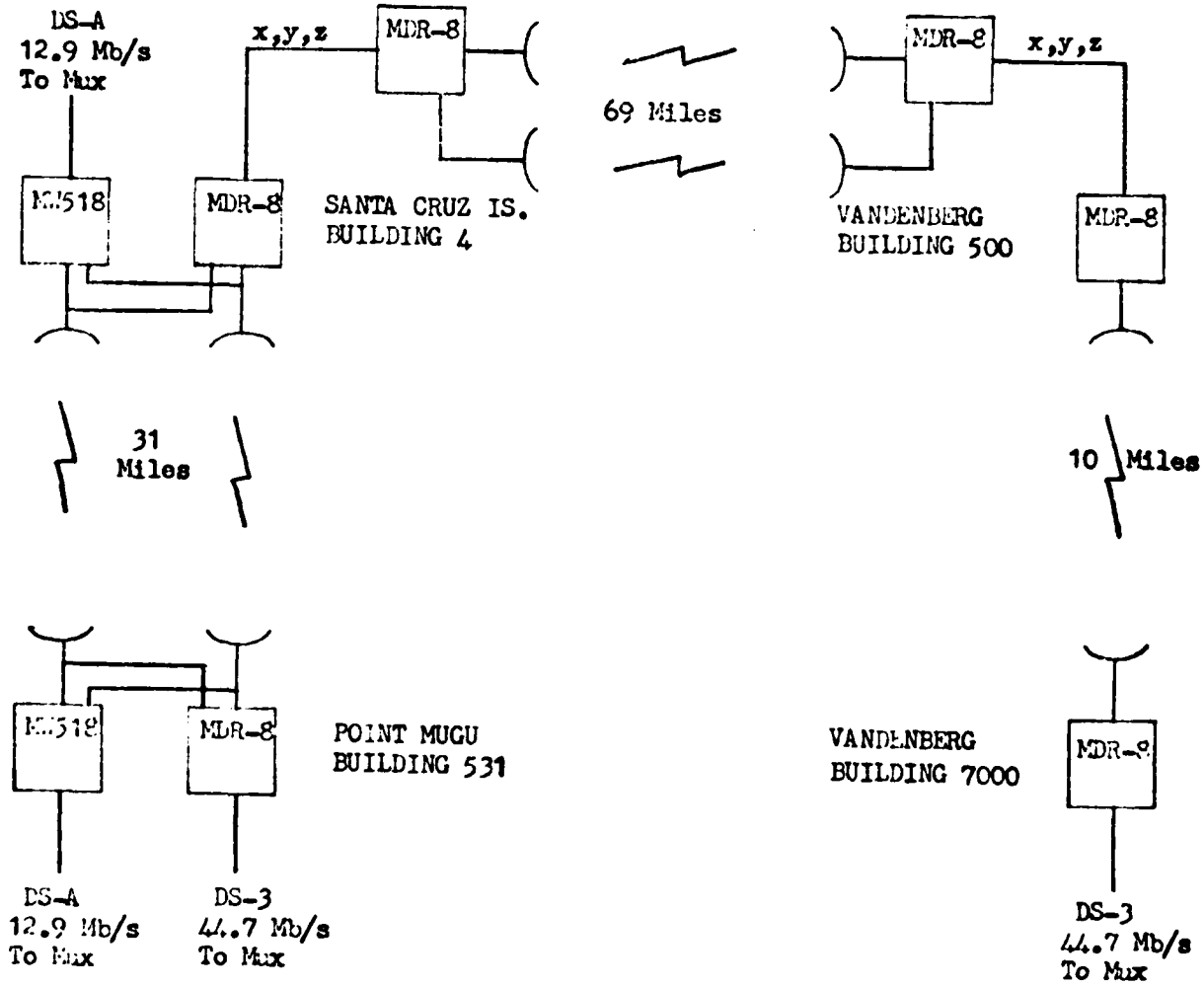

Figure A-3. Vandenberg AFB digital microwave system.

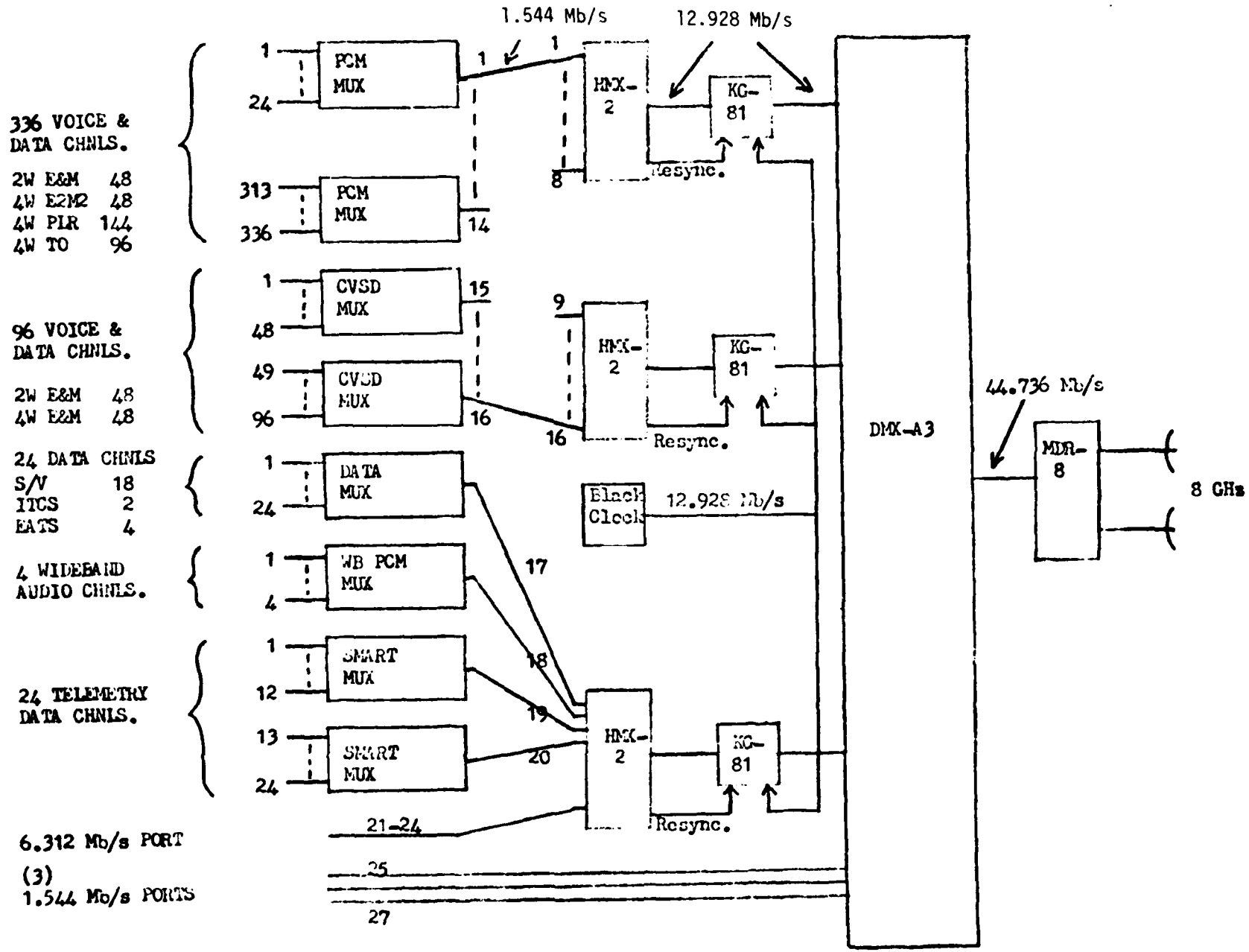

Figure A-4. Point Mugu/SNI multiplex.

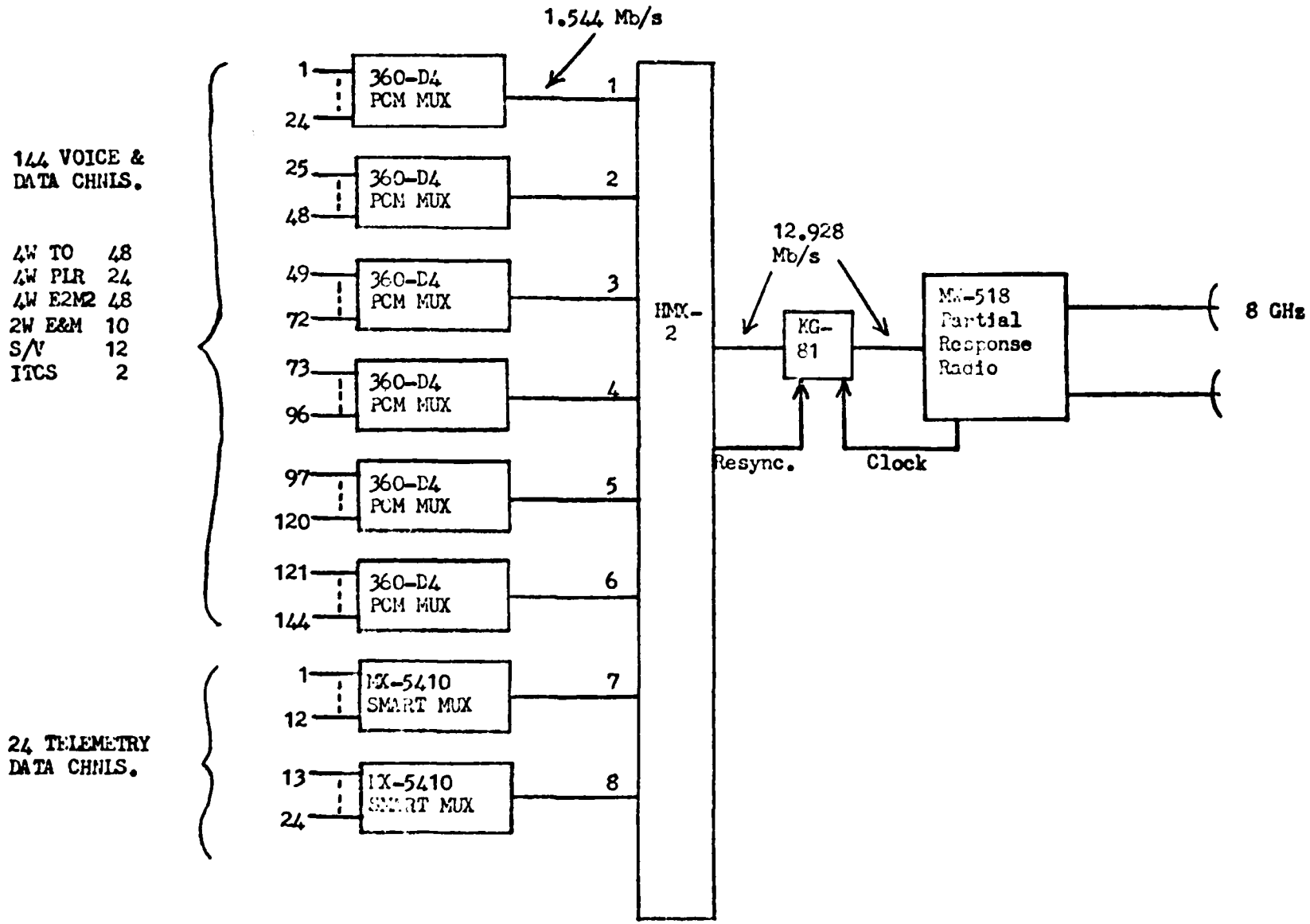

Figure A-5 Point Mugu/Laguna Peak multiplex.

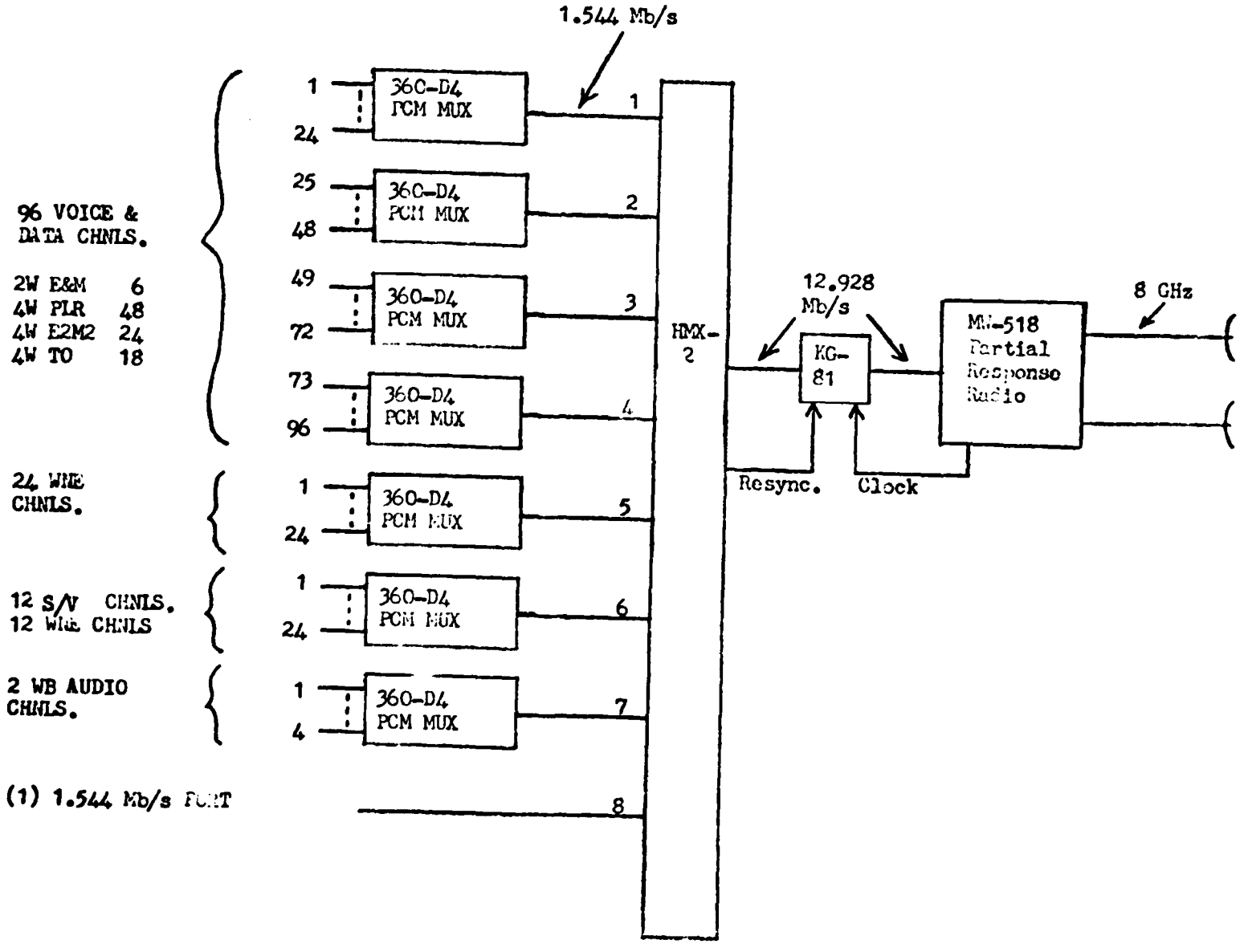

Figure A-6. Point Mugu/SCI multiplex.

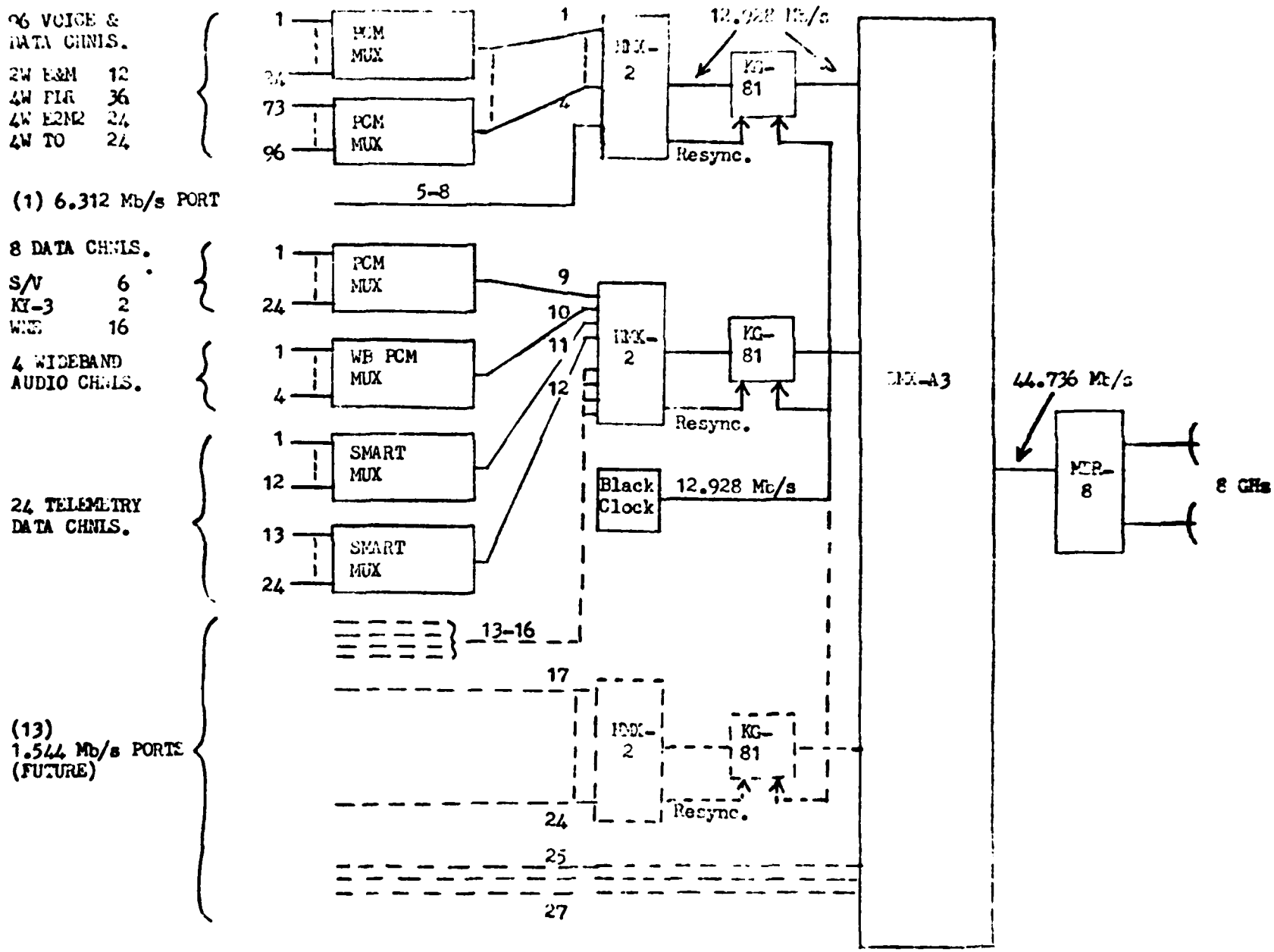

Figure A-7. Point Mugu/VAFB multiplex.

eight DS-1 data streams into a single 12.9 Mb/s stream designated "DS-A" by Rockwell. This data stream is put on a conventional analog FM microwave radio. This system is used for the links to Laguna Peak and to SCI, since the data rate is more than adequate for the required number of channels. The Digital Radio and Multiplexer Acquisition System under development for NATO has just become available, but it has been surpassed by commercial systems in most operating characteristics. The DS-3 44.7 megabit commercial systems will handle 28 DS-1 data streams. The anticipated data requirements from SNI will nearly fill the commercial system, so it was chosen. However, there is as yet no crypto available from the National Security Agency (NSA) for this data rate. Fortunately, a multiplexer developed for the WAWS will provide up to 27 DS-1 streams and allow use of the KG-81 encryptor, which is available.

Propagation. The 65-mile overwater path between SNI and Laguna Peak will be one of the longest 45-megabit microwave links in the world. No data were available to predict performance on this path, so PMTC awarded a contract to study the path. The digital radio has been on the air on this path with a bit-error test set, and error data and radio status have been recorded on tape for later reduction and analysis. Current data show an average error-free seconds of 99.1 percent and an availability of 99.97 percent. The link operates as an error-free link punctuated with loss of synchronization. The recurring temperature inversion in the operational area hovers near path height and produces considerable multipath. The multipath produces amplitude and group delay distortion in the radio passband, which can only partially be compensated. Efforts are being made to develop system immunity to this condition. The design goal is not more than 1000 seconds per year with frame loss and not more than two consecutive seconds with frame loss.

Data Channels. The Wescom model 360-D4 channel banks used in the system have a "single codec per channel" design approach. Voice channels are supplied from Wescom's catalog of industry-standard channels. Data channels for the asynchronous 0-20 kilobit secure voice data and the synchronous 50 kilobit EATS and 51.3 kilobit ITCS data were specially designed for PMTC by Wescom. The IRIG-B timing can be relayed via the normal 3 kHz voice channels, which have excellent low frequency characteristics. System design for the 0 to 100 kHz Command Control information has not been completed. Personnel at PMTC are presently documenting the CDT system on the range so that a system compatible with the digital microwave can be implemented. Low-speed data will initially be carried via data modems over voice channels, as it now is. Although the digital microwave system can be made with a direct digital interface at 2400, 4800, or 9600 bits per second, the RS-232 interface now used is unsuited for cable runs of more than 50 feet. When newer interfaces such as RS-422 become available, they can be implemented. Wescom is currently developing modules that will allow this system to provide Bell System Digital Data Service (DDS), a nation-wide synchronous data service at up to 56 kilobits. Systems designers are urged to use standard data rates for any new systems, especially those that will use leased common-carrier facilities.

Telemetry Data. Digital microwave systems operate at fixed rates with only a few parts per million allowed for stuffing to achieve asynchronous operation.

Telemetry data comes at many different rates and may include doppler and drift. An intelligent multiplexer/demultiplexer (or "smart mux") was developed by Magnavox for the PMTC system. This smart mux, the MX-5410, can accept up to 12 channels, each at any rate from 10 kilobits to 1390 kilobits, and interface at a Bell System Standard DS-1 1.544 megabit rate. The demux reproduces the input, both data and clock. The unit is fully automatic and requires no programming or setup for the various data rates.

Physical Security. The physical security of cryptographic equipment is primarily the responsibility of the local Commanding Officer. Basically, he is responsible for ensuring that access to and operation of the equipment is in accordance with applicable NSA and service regulations. At Point Mugu, because none of the microwave rooms is designated as a "Secure Area," the cryptographic devices are located within Mosler equipment safes equipped with combination locks. Because no classified data are present, wiring into and out of the safes needs to conform only to good technical practice for shielding and isolation. Under normal conditions the safes may be locked, because the cryptographic devices will resynchronize automatically without manual control.

Power. The primary customer for digital microwave equipment has been the commercial telephone industry. Fixed telephone plants typically operate from -48 VDC supplied by a battery plant charged from the AC commercial power. For this reason, digital channel banks are designed to operate from -48 VDC. The microwave sites at Point Mugu all operate from -24 VDC. Point Mugu and SNI have -48 VDC available because of the telephone plants at those sites, and power distribution panels for -48 VDC will be installed in the microwave rooms at SNI and Point Mugu. At Santa Cruz Island and Laguna Peak, where no -48 VDC is available, the channel banks will operate from DC/DC converters supplying -48 VDC from the available -24 VDC.

Fault Reporting. The system is designed using the MCS-11 Fault Reporting System from Rockwell. The MDR-8 digital radio provides for up to eight 32 kilobit auxiliary channels in addition to the 44.736 Mb/s data stream. One of these channels is the orderwire, and a second serves the MCS-11. Summary alarms such as rack or shelf alarms are polled regularly and relayed back to building 531, where they will be displayed both in the microwave room and downstairs in "Tech Control." These summary alarms will monitor the radios, multiplexers, channel banks, cryptos, and AC power. It is contemplated that a second, independent system will be installed later to monitor site and housekeeping functions such as intruder and fire alarms and any other functions that can be represented by a switch closure. A detail alarm permits remote monitoring of the radio alarm panel, including battery voltage, received signal level, and detail radio status. The VAFB system is polled independently by both VAFB and Point Mugu for status display at both ends of the system.

Trunk Processing. Commercial channel banks such as the Wescom 360-D4 are designed for compatibility with Bell System standards and include trunk processing. Periods of frame loss are integrated and timed as a measure of link performance. Poor performance (frame loss of more than 2-1/2 seconds) initiates trunk processing, wherein all 24 voice channels are busied out for about 15 seconds. In commercial service, this prevents a digital switch from

selecting a noisy channel. In government range service, the additional 15-second loss could lead to automatic self-destruction of a missile if command-control information were lost for that 15 seconds. At PMTC the trunk processing feature has been deleted by a simple modification to the Alarm Logic Unit in the Wescom 360-D4.

Crypto Bypass. The CI-3 system consists of the KG-81 crypto mounted (as a plug-in module) in either an HNF-81-1 frame (for classified applications) or, as at PMTC, in the HNF-81-2 frame, which incorporates a bypass function. By remote switch activation of the bypass function at both ends of the link, plain text operation of the system can be continued while the KG-81 is removed for maintenance. Because the KG-81 is the only nonredundant element in the system, a crypto bypass panel has been placed in "Tech Control" to allow system controllers to initiate bypass at both ends of the link from a single switch.

APPENDIX B

BIBLIOGRAPHY

Reference Documents

Andrew Antenna Systems Catalog Number 30, Andrew Corporation, 1979.

Basic Telephone Switching Systems, David Talley, Hayden Press: Copyright 1969.

Communication System Design, Philip F. Panter, Ph.D., McGraw Hill: Copyright 1972.

Communication System Engineering Handbook, Donald H. Hamsher, McGraw Hill: Copyright 1967.

Communication Systems; Introduction to Signals and Noise in Electrical Communications, A. Bruce Carlson, McGraw Hill: Copyright 1968.

Construction and Field Implementation, Field Installation Procedures, Electronic Systems Group, Collins Radio Company.

DC Power Systems; Battery and Charger Applications for Communications, Walter Bigger, Warren Manufacturing Company.

Digital Microwave Transmission Engineering Symposium, Collins Transmission Systems Division, Commercial Telecommunications Group, Rockwell International Corporation, 11 September 1978.

DMX-13 Digital Muldem System Application Manual, Collins Transmission Systems Division, Rockwell International Corporation.

Elementary Treatment of Reliability and Spare Parts Calculations, B. Trigerman, Ph.D., Ericsson Long Distance Transmission Division.

Engineering and Operations in the Bell System, Members of the Technical Staff, Bell Telephone Laboratories: Copyright 1978.

Engineering Considerations for Microwave Communication Systems, Robert F. White, GTE Lenkhurt: Copyright 1975.

ITT T-324 Trunk Carrier System Operation, Maintenance, and Installation Manual, Volumes I and II, ITT Telecommunications Division.

Lighting Elimination, Roy B. Carpenter, Jr., Lighting Elimination Associates.

Lighting in Retrospect for the Communication System, Herb Zivarra.

MCS-11 Monitor and Control System Application Manual, Collins Transmission Systems Division, Rockwell International Corporation.

MDR-11 Microwave Radio Systems Application Manual, Collins Transmission Systems Division, Rockwell International Corporation.

Microflect Passive Repeater Engineering Catalog Number 161A, Microflect Co., Inc.

Modern Communication Principles with Application to Digital Signaling, Seymour Stein and J. Jay Jones, McGraw Hill: Copyright 1967.

MS-228 Microwave Radio System Application Manual, Collins Transmission Systems Division, Rockwell International Corporation.

Switching Systems, American Telephone and Telegraph, ATT: Copyright 1961.

Telecommunication Transmission Handbook, Robert L. Freeman, Wiley Press: Copyright 1974.

Telecommunications and the Computer, James Martin, Prentice-Hall: Copyright 1976.

The Lenkhurt Demodulator, GTE Lenkhurt: Copyright 1966. Including the following articles:

"Some Factors Affecting the Propagation of Microwave over Point-to-Point Radio Systems," Vol. 3, No. 6, June 1954.

"How to Prepare and Use Profile Charts of Radio Link Routes," Vol. 2, No. 1, January 1953.

"Microwave Diversity. . .How It Improves Reliability," Vol. 10, No. 3, March 1961.

"How to Increase Microwave Reliability," Vol. 8, No. 9, September 1959.

"Antenna Systems for Microwave, Part One," Vol. 12, No. 5, May 1963.

"Antenna Systems for Microwave, Part Two," Vol. 12, No. 7, July 1963.

"Characteristics of Waveguide," Vol. 14, No. 10, October 1965.

"Basic Concepts of Engineering Reliability," Vol. 13, No. 9, September 1964.

"DC Power Plants for Communications Systems," Vol. 14, No. 2, February 1965.

"Shielding and Grounding," Vol. 11, No. 10, October 1962.

The Storage Battery; Lead Acid Types, Exide Industrial Marketing Division.

Other Documents

1. Lenkhurt Electric Company (1970), Engineering Considerations for Microwave Communications System, (GTE Lenkhurt, Dept C134, San Carlos, CA, 94070).

2. AFCS (1970), Systems Approach to Wideband Communications, AFCSP 100-35 (Air Force Communications Service, Scott AFB, IL 62225).

3. AFLC (1975), Microwave Relay Systems, AFTO 31R5-1-9 (Air Force Logistics Command, OCAMA, Tinker AFB, OK).

4. CCIR, CCITT (1969), Economic and Technical Aspects of the Choice of Transmission System (International Telecommunications Union, Geneva, Switzerland).

5. T. S. Saad, Editor (1971), Microwave Engineers' Handbook, Volumes I and II (Aetech House, Inc., Dedham, Mass.).

6. Bell Telephone Laboratories (1970), Transmission Systems for Communications (Western Electric Company, Inc., Winston-Salem, N.C.).

7. IEEE Transactions on Communications (December 1979), Special Issue on Digital Radio, Vol. Com-27, No. 12. Including the following articles:

M. Ramadan, "Availability Prediction of 8PSK Digital Microwave Systems During Multipath Propagation," pp. 1862-1869.

C. W. Anderson, S. G. Barber, and R. N. Patel, "The Effect of Selective Fading on Digital Radio," pp. 1870-1876.

C. M. Thomas, J. E. Alexander, and E. W. Rahneberg, "A New Generation of Digital Microwave Radio for U.S. Military Telephone Networks," pp. 1916-1928.

8. Specification K-4-B-012S/77, Procurement Specification for Line-of-Sight Digital Microwave System, dated 10 January 1978. (BMDSCOM, Huntsville, AL 35807)

9. Specification PMTC-CD-EL-716-78, Digital Microwave System, San Nicolas Island System Installation, dated 22 April 1980. (PMTC, Point Mugu, CA 93042)

10. Rockwell International, Collins Transmission System Division: Digital Microwave Transmission Engineering Symposium, Sessions 1 to 18, 14 and 15 November 1977.

11. K. Feher (1981), Digital Communication, Microwave Applications (Prentice-Hall, Englewood Cliff, N.J.)

12. C. W. Lundgren and W. D. Rummler, "Digital Radio Outage Due to Selective Fading - Observation versus Prediction from Laboratory Simulation." BSTJ, Vol. 58, No. 5, pp. 1073-1100, May-June 1979.

13. W. D. Rummler, "A New Selective Fading Model: Application to Propagation Data." BSTJ, Vol. 58, No. 5 pp 1037-1071, May-June 1979.

Government Publications

MIL-STD-188-120*, 15 May 1976 - Military Communication System Standard Terms and Definitions.

MIL-STD-188-313, 19 Dec 1973 - Subsystem Design and Engineering Standards and Equipment Technical Design Standards for Long-Haul Communications Traversing Microwave LOS Radio and Tropospheric Scatter Radio.

MIL-STD-188-322, 1 Nov 1976 - Subsystem Design/Engineering and Equipment Technical Design Standards for Long-Haul Line of Sight (LOS) Digital Microwave Radio Transmission.

MIL-STD-188-347 - Standards for Long-Haul Communication Equipment Technical Design Standards for Digital End Instruments and Ancillary Devices.

MIL-HDBK-416, 15 Nov 1977 - Design Handbook for Line of Sight Microwave Communication Systems.

NACSIM 5203, 30 Jun 1982 - National COMSEC Information Memorandum: Guidelines for Facility Design and Red/Black Installation.

FM 11-486-13, T031Z-10-20, NAVELEX 0967-LP-625-4010, Oct 1979 - Telecommunications Engineering: Digital Communications.

NAVELEX 0280-LP-901-0000 (NAVELEX 0101, 112), May 1972 - Naval Shore Electronics Criteria: Line-of-Sight Microwave and Tropospheric Scatter Communication Systems.

T. O. 31R5-1-9 (GEEIA Standard), 15 Jun 1970, Change 1: 1 Feb 1971 - Ground Electronics Engineering - Installation Agency Standard: Line-of-Sight Radio Relay Systems (600 MHz to 13,000 MHz).

FM 11-486-19, Aug 1978** - Telecommunications Engineering: Systems Engineering and Project Implementation.

---

*See attached table 8-2 from FM 11-486-19 for other examples of Military Standards.

**See attached table 8-3 from FM 11-486-19 for other examples of Army FMs and TMs.

Table 8-2. Representative Examples of Military Standards of Interest to the Communications Engineer and Planner

Number	Title	Description
MIL-STD-12	Abbreviations for Use on Drawings, Specifications, Standards, and Technical Documents	Provides terms and abbreviations commonly used on drawings and other technical documents in DOD agencies and departments
MIL-STD-100	Engineering Drawing Practices	Prescribes procedures and format authorized for the preparation of engineering drawings and associated list prepared by DOD agencies and departments
MIL-STD-109	Quality Assurance Terms and Definitions	Provides a standard interpretation of quality assurance terms and definitions to be applied throughout the determination of quality assurance
MIL-STD-129	Marking for Shipping and Storage	Provides the requirements for the uniform marking of military supplies and equipment for shipment and storage
MIL-STD-188C (to be replaced by MIL-STD-188-200-series)	Military Communication System Technical Standards	Provides technical design standards for tactical military communications systems. Provides the basic technical parameters of communications equipment and systems
MIL-STD-188-100-series	Common Long-Haul and Communication System Technical Standards	Provides common standards for long-haul and tactical communications systems. It specifies electrical channel and loop characteristics necessary for the establishment of interconnecting circuits between long-haul and tactical users for voice and data services
MIL-STD-188-300-series	Standards for Long-Haul Communications System Design Standards Applicable to the Defense Communications System	Provides overall system parameters, minimum electrical performance, and end-to-end requirements for the DCS. It assures subsystems of the DCS are designed, engineered, and installed to satisfy the requirements of DOD users when operated in tandem over global distances
MIL-STD-196	Joint Electronics Type Designation System	Establishes procedures for the standardization of identification for design control of electronic material and associated equipment, excluding COMSEC material
MIL-STD-449D	Radio Frequency Spectrum Characteristics, Measurement of	Establishes uniform measurement techniques applicable to the determination of the special characteristics of transmitters, receivers, antennas and system couplers
MIL-STD-461	Electromagnetic Interference Characteristics, Requirements for Equipment	Sets requirements and test limits for the measurement and determination of the electromagnetic interface characteristics of electronic, electrical, and electromechanical equipment
MIL-STD-462	Electromagnetic Interference Characteristics, Measurement of	Establishes standard techniques for the measurement and determination of the electromagnetic interference characteristics of electrical, electronic, and electromagnetic equipment, as required by MIL-STD-461
MIL-STD-470	Maintainability Program Requirements (for Systems and Equipments)	Provides requirements for establishing a maintainability program and guidelines for the preparation of a maintainability program plan
MIL-STD-490	Specification Practices	Sets uniform practices for specification preparation, to insure the inclusion of essential requirements, and aid in the use and analysis of specification content
MIL-STD-785	Reliability Program for Systems and Equipment Development and Production	Establishes uniform criteria for a reliability program and provides guidelines for the preparation and implementation of a reliability program plan

Table 8-3. Examples of Army FMs and TMs of Assistance to the Communications Engineer and Planner

Number	Title	Description
TM 11-486-1	Telecommunications Engineering: Planning Considerations	Provides an introduction to the FM/TM 11-486-series and establishes the basic principles applicable to planning and engineering Army communications systems
FM 11-486-2	Telecommunications Engineering Traffic	Contains traffic engineering standards for military communications systems. It discusses methods of determining switching and trunking requirements, estimating traffic loads, and developing switching plans. It presents detailed traffic requirements data for use by transmission engineers
FM 11-486-3	Telecommunications Engineering: Transmission and Circuit Layout	Discusses transmission principles, practices, and standards applicable to transmission and circuit layout. It establishes standards for telephone, telegraph, facsimile, data, and television transmission over wire and radio facilities
FM 11-486-5	Telecommunications Engineering: Outside Plant, Telephone	Establishes engineering standards and principles applicable to the planning and design of outside plant wire systems. It also contains engineering factors that govern the construction of such systems
TM 11-486-6	Electrical Communications Systems Engineering: Radio	Establishes standards for selecting radio transmission paths, antenna systems, and RF transmission lines to provide reliable radio and radio relay communications circuits. It also deals with the different types of propagation, frequency prediction, frequency allocation and assignment, and radio interference and jamming
TM 11-486-7	Electrical Communications Systems Engineering: Power	Establishes standards for the selection of power sources for communications equipment. It covers power engineering techniques for determining power load and selecting power distribution methods
TM 11-486-10	Electrical Communications Systems Engineering Handbook	Contains information on systems planning and engineering that is applicable to subject matter in the FM/TM 11-486-series of manuals. It is a compilation of tables, charts, formulas, conversion factors, and mathematical data
TM 11-486-11	Electrical Communications Systems Engineering: Definitions and Abbreviations	Defines terms and explains abbreviations commonly used by communications engineers
FM 11-486-20	Telecommunications Engineering: Base Communications	Contains information on engineering and installation of all base communications applicable to, or in support of, military posts, camps, or stations. Provides detailed guidance for planning, engineering, and installing all base communications equipment of systems/complexes within the responsibility of the post signal officer
TM 11-2262-series	Construction and Maintenance: Outside Plant (Volumes 1-9)	Presents the theory and application of outside plant construction and maintenance practices for military telephone systems

APPENDIX C

GLOSSARY

AFC	Automatic frequency control.
AGC	Automatic gain control.
AM	Amplitude modulation.
ASCII	American Standard Code for Information Interchange.
Attenuation Distortion	Departure of a signal from uniform amplification or attenuation over the frequency ranges of interest.
Availability	May be either instantaneous or mean. Instantaneous availability is the probability that a system is in operation at the time it is needed. Mean availability is the fraction or percentage of the operating time during a given time interval.
AWG	American wire gauge.
Azimuth (AZ)	Refers to the orientation of the microwave antenna with respect to due north (i.e., 270-degree azimuth is due west).
Baseband Repeater	Commonly called a remodulating repeater. This type repeater fully demodulates the incoming RF signal to baseband and then remodulates the baseband back to RF for subsequent transmission to the next facility.
Baud	A unit of modulation rate. In binary transmission systems, the baud and bit per second are synonomous. In M-ary systems, the number of bauds is indicative of the number of transitions per second.
BB	Baseband.
BCD	Binary coded decimal. A code in which the 10 digits (0-9) are conventionally represented by the binary numbers 0000 through 1001 and all other numbers are structured on these basic digits.

BER	Bit error rate. A ratio of the number of errors in a stream of information bits to the total number of bits.
Bessel Function	A mathematical function commonly used for derivation of frequency modulation sideband energy.
BIF	IF bandwidth. The parameter used in determining the received noise bandwidth in calculating signal-to-noise ratios.
Bipolar	A data format whereby logic 1's alternate positive and negative from the reference baseline.
Bit	Binary digit, either logic 1 or logic 0.
Bit Interval	The time equal to one period of the system clock frequency.
BNZS	Bipolar, but with N zeros substitution (PCM terminology).
Boltzmann's Constant (k)	A constant commonly used in noise calculations (i.e., $k = 1.3803 \times 10^{-23}$ J/K).
bps	Bits per seconds, a commonly used measurement denoting data transmission speed.
BPSK	Binary phase shift keying, sometimes called PSK or 2PSK, is a modulation technique in which the modulating information shifts a carrier in phase from a reference.
BWR	Bandwidth ratio. Used in determining signal-to-noise ratio from NPR, i.e., $$BWR = 10 \log \frac{\text{(Occupied baseband bandwidth)}}{\text{(Voice channel bandwidth)}}$$
Byte	A single group of bits processed together, usually consisting of 8 bits.
B3ZS	Bipolar with three zero substitution data format.
Carrier-to-Interference Ratio (C/I)	The ratio of desired carrier to interfering carrier in a communication system, i.e., $$\frac{C}{I}_{(dB)} = 10 \log \frac{\text{desired carrier level}}{\text{interfering carrier level}}$$

Carrier-to-Noise-Ratio

A measurement of performance in a receiver bearing a distinct relationship to the output signal-to-noise ratio. (See figure C-1.)

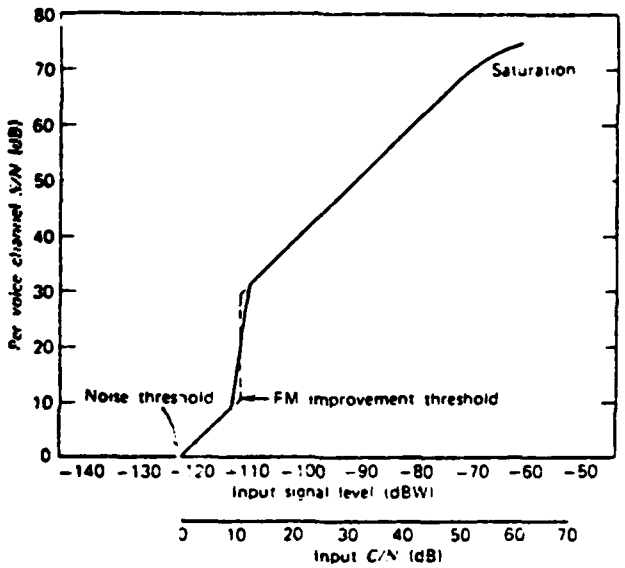

Figure C-1. Carrier-to-noise ratio.

CCIR

International Consultive Committee for Radio, organized under the auspices of the International Telecommunications Union (ITU), Geneva, Switzerland.

CCITT

International Consultive Committee for Telephone and Telegraph, organized under the auspices of the International Telecommunications Union (ITU), Geneva, Switzerland.

CEMF Cell

Counter EMF Cell. This device is used to regulate the voltage across the load.

CMOS

Complemetary metal oxide semiconductor. A family of logic devices that operate at a slower speed and have lower power requirements than ECL.

Coaxial Cable

A transmission line in which one conductor surrounds the other, the two being coaxial and separated by some form of dielectric. This cable may be air-filled with foam dielectric spacers or may have a solid foam dielectric.

Codec	Coder-decoder. This is an acronym used in PCM terminology for a device capable of both encoding and decoding the 8-bit words of a T-1 bit stream.
Compandor	Compressor-expander. The compressor compresses the intensity range of VF signals at the source by imparting more gain to weak signals than to strong signals. At the far end output of a communication circuit, the expander performs the reverse function by restoring the intensity of the signal to its original dynamic range. This circuit thereby serves two functions: a. It improves signal-to-noise ratio. b. It limits dynamic power range of VF signals, thereby allowing better circuit quality using 8-bit coding of PCM signals.
DADE	Differential Absolute Delay Equalization. A term commonly used in testing the DMX-13.
dB	Abbreviation for decibel, a relative unit of measurement describing a ratio, i.e., dB = 10 $\log_{10}$ (the power ratio of a network).
dBa*	Decibels above reference noise adjusted (dBrn adjusted), a noise measurement unit using F1A weighting (now obsolete): 1 mW, 0 dBm at 1000 Hz = +85 dBa = -85 dBm.
dBm	Decibels referred to 1 mW, i.e., $$\text{dBm} = 10 \log_{10} \left(\frac{\text{power (mW)}}{1 \text{ mW}} \right)$$
dBm0	An absolute power unit in dBm referred to the 0 TLP (zero level point).
dBmp	A noise measurement unit based on dBm using psophometric weighting.

*See next page.

dBmV	An absolute voltage level measurement unit based on the dB referred to 1 mV across 75 ohms, i.e., $$\text{dBmV} = 20 \log_{10} \frac{\text{voltage (mV) at 75-ohm impedance}}{1 \text{ mV}}$$
dBr	Decibels referenced. The number of decibels of level above or below a specified reference point in a system.
dBrn*	A noise measurement unit developed for the type 144 handset (rn stands for reference noise): $$0 \text{ dBrn} = -90 \text{ dBm } (10^{-12} \text{ W or } 1 \text{ pW}).$$
dBrnC*	A noise measurement unit using C-message weighting (designed for 500 subsets): $$0 \text{ dBm at } 1000 \text{ Hz} = +90 \text{ dBrnC}$$
dBW	Decibels relative to 1 watt: $$0 \text{ dBW} = +30 \text{ dBm} = 1 \text{ watt}.$$
Delay Distortion	Also called envelope delay distortion or group delay. This is distortion imparted to a band of frequencies as they experience different time delays through a network.

**To convert flat noise in dBm to noise weighting, use the following:*

dBa = flat noise (dBm) + 82

dBrn = flat noise (dBm) + 90

dBrnC = flat noise (dBm) + 88.5

However, at 1000 Hz, a 0-dBm power reading would yield the following:

0 dBm at 1000 Hz = 90 dBrn (for 144 handset)

0 dBm at 1000 Hz = 85 dBa (F1A handset)

0 dBm at 1000 Hz = 90 dBrnC (C-message for type 500 handset)

Di-Bit Coding	Coding for transmission at 2 bits at a time, so that each transition on transmission represents 2 bits of information.
Differential Delay	The difference between the maximum and minimum frequency delays across a band of interest.
Distortion	An undesirable alteration of the original signal. Distortion is of two general types: amplitude distortion and phase (delay) distortion.
Diversity	A form of LOS transmission protection using multiplex modes, usually in space or frequency, to compensate for path fading or outages.
DS	A Bell System convention used to describe the digital hierarchy, i.e., DS-1 = 1.544 Mb/s (24 VF channels) DS-2 = 6.312 Mb/s (96 VF channels) DS-3 = 44.736 Mb/s (672 VF channels) DS-4 = 274.176 Mb/s (4032 VF channels)
DSB	Double sideband. A form of AM (amplitude modulation) where the same information is carried on each sideband. If the term DSB is used, it should be stated whether the carrier is suppressed or not.
DSBEC	Double sideband, emitted carrier.
DSBSC	Double sideband, suppressed carrier.
Echo Distortion	Distortion generated by return loss along a transmission line.
ECL	Emitter-coupled logic. A family of high-speed logic devices used in the high-speed interface shelf of the DMX-13.
Effective Earth Radius	A term that expresses the radius of the earth as it relates to LOS microwave propagation, i.e., effective earth radius = K times the actual earth radius.

EIRP	Effective Isotropically Radiated Power.
Envelope Delay	See Delay Distortion.
Equalize	In reference to dc power system, this term denotes the charging process where all battery cells are raised to an above-normal value in order to ensure all cells are at a uniform, maximum operating potential.
Fading	A general term applied to the loss of signal, as seen by the radio receiver at its input. Fading is dependent upon both climatic and terrain variables.
FCC	Federal Communications Commission, the U.S. Federal telecommunications (and radio) regulatory authority.
FDM	Frequency division multiplex.
Ferroresonant Charger	A straightforward battery charger design using a ferroresonant step-down transformer. This type charger is highly sensitive to variations in the input ac line frequency.
Fixed Noise	Fixed noise is due to power supply noise, transistor noise, etc. This type of noise is not measurable separately.
Floating	A term used to describe the process of keeping a battery fully charged to serve as a standby dc power source in the event of battery charger or ac power source failure.
FM	Frequency modulation.
Frame	In PCM, the assembly of digits that together constitute the repetitive cycle of the multiplex.
Free-Space Loss	The theoretical radiation loss that occurs through the atmosphere, usually designated A, i.e., $A = 36.6 + 20 \log D + 20 \log f$, where D = distance in km and f = frequency in MHz.

Fresnel Zones	An obstacle clearance criteria for the microwave beam, used to measure the effect of the obstacle in terms of frequency rather than in terms of feet. The nth Fresnel zone is a surface surrounding the microwave beam that contains every point for which the sum of the distance from that point to the two ends of the path is exactly "n" half wavelengths longer than the direct end-to-end path.
FSK	Frequency shift keying. A modulation technique commonly used in teletype transmission (TTY).
F1A (weighting)	An obsolete weighting used in the United States. Noise units used with this weighting network are dBa.
Gas Arrestor	A type of lightning arrestor comprising a number of air gaps in series between metal cylinders or cones.
Gaussian Distribution	Also called normal distribution. A density function of a population that is bell-shaped and symmetrical with respect to a given reference.
Giga	A prefix meaning one billion, i.e., 10^9.
Group	In FDM carrier telephony, a number of voice channels multiplexed together and treated as a unit. A basic group commonly consists of twelve 4-kHz VF channels from 60 to 108 kHz.
Group Delay	See Delay Distortion.
Guy	A wire or cable commonly used to brace the antenna tower of a communication station.
Harmonic	A sinusoidal wave having a frequency that is an integral multiple of the fundamental frequency.
Heterodyne	To mix two frequencies together in order to produce two other frequencies equal to the sum and the difference of the first two.
Heterodyne Repeater	A radio repeater that accepts the incoming RF, converts it to IF, applies it, and reconverts it to RF for further transmission.

Hot-Standby	The provision of a parallel equipment configuration that can be switched into use upon failure of the primary equipment.
Idle Channel Noise	A performance measurement used in either FDM or TDM systems. This parameter is the measurement of noise in the channel with no signal.
IF	Intermediate frequency. In microwave applications, this frequency is typically 70 MHz.
IMPATT	Impact Avalanche and Transmit Time semiconduction device. This is a PN junction device operated with a large back bias so avalanche breakdown occurs in the active region.
Intermodulation Noise	Noise caused by nonlinearity in the system when speech signals in one or more channels give rise to harmonics or IM products which appear as noise in other channels.
Intersymbol Interference	Pulse distortion due to filtering and delay. This is indicated by blurring of the eye pattern.
Intrinsic Noise	Also known as idle noise, this noise consists of both fixed and variable noise. This type of noise is measured without the baseband loaded.
Inside Plant	A term denoting the equipment that is inside the walls of the installation. In contrast, outside plant denotes all equipment that is outside the transmission facility, such as antennas, towers, etc.
Johnson Noise	Commonly called thermal noise, this is the noise inherent in all communications systems due to the random motion of electrons within all equipment elements, ie., $$\text{Noise} = P_n = KTBF, \text{ where}$$ K = Boltzmann's constant, T = temperature in degrees Kelvin, B = noise bandwidth (usually BIF), and F = receiver noise figure.

Jumbo Group	A group of FDM VF channels made up of six master groups (Bell System FDM hierarchy). The basic jumbo group occupies the spectrum from 564 to 15,548 kHz.
K Factor	Used in LOS radio path profiling to determine the amount and type of bending a radio beam may undergo. For $K > 1$, the beam is bent toward earth. For $K < 1$, the beam is bent away from earth.
λ	Lambda, a Greek letter referring to wavelength. Lambda also refers to failure rate when discussing equipment reliability.
LBO	Line build out, a method of extending the length of a line electrically, usually by means of capacitors.
Line Frequency	A term used in FDM. The band of frequencies that the multiplexer applies to the transmission line.
Loading	A term used in FDM systems. This term refers to the amount of traffic a system may accommodate at a given time.
Mag-Amp Charger	This type of charger uses variable impedance inductors in series with power rectifiers. Load sharing is easily accomplished with this type of charger.
Master Group	A group of 600 VF channels, as developed by the Bell System hierarchy. The frequency allocation for the master group depends upon the specific frequency plan being used.
mm Region	As designated by the ITU, the frequency band from 30 to 300 GHz. For most purposes, however, this frequency range extends from 13 to 100 GHz.
Modem	Modulator-demodulator.
Modulation Index (m)	In FM, the modulation index is given as follows: $$m = \frac{\text{peak frequency deviation } (fd)}{\text{highest modulating frequency } (fm)}$$

MTBF	Mean time between failure.
MTR	Mean time to restore.
MTTF	Mean time to failure. $$MTTF = \frac{1}{\text{failure rate } (\lambda)}$$
MTTR	Mean time to repair.
Multipath Distortion	Distortion that results from the difference in time of arrival of signals that have traveled along different paths between transmitter and receiver.
NLR (P)	Noise load ratio, i.e., $NLR = P = -1 + 4 \log N$ (for $N < 240$ channels) or $NLR = P = -15 + 10 \log N$ (for $N > 240$ channels).
Noise Figure (F)	The ratio of the S/N at the input of a network to the S/N at the output, i.e., $$F = \frac{S/N \text{ in}}{S/N \text{ out}}$$
NPR	Noise power ratio. In FM/FDM systems, this denotes the performance of intermodulation noise when measured under standard fixed conditions. This is the ratio, expressed in decibels, of (1) the noise in a test channel with all channels loaded with white noise to (2) the noise in the test channel with all channels except the test channel fully noise loaded.
NRZ	Nonreturn to zero. A data stream format in which data bits are single-valued over a bit interval.
OBS	Out-of-Band Signaling. In FDM systems, the method of channel signaling that uses a tone-on, tone-off condition at a frequency between 3400 Hz and 4000 Hz, usually 3825 to 3875 Hz.
Outage Time (O)	The amount of time, on a per day, per month, or per year basis, that a circuit is not usable because of propagation or hardware failure.

OW	Orderwire, service channel.
PAM	Pulse amplitude modulation.
PCM	Pulse code modulation.
PDM	Pulse duration modulation.
Periscopic Antenna System	Instead of using a long waveguide run up a tower, some radio links resort to an "optical mirror," similar to that used with a submarine periscope. In this case, a passive reflector is installed at the top of the site antenna tower (or whatever operating height), and the parabolic reflector antenna is installed oriented upward with its ray beam in near field at a 45-degree angle with the reflector, in such a way that the reflected ray is directed at the distant antenna. Depending upon near-field location and passive reflector size, a periscopic system may display up to a 3-dB gain or loss over simple parabolic antenna systems with their waveguide run loss not included.
PSK	Phase-shift keying. A form of phase modulation in which the modulating function shifts the instantaneous phase of the modulated wave between predetermined discrete values. Commonly used types of PSK are 2PSK or BPSK, 4PSK or QPSK, 8PSK, and 16PSK.
Psophometric	A noise weighting used to determine noise power levels. For 3.1-kHz channels, the noise level must be reduced 2.5 dB to obtain the psophometric power level. For any other bandwidth, the weighting factor is as follows: $$\text{weighting factor} = B = 2.5 + 10 \log \left(\frac{B}{3.1}\right) \text{dB}.$$
pWp	Picowatts psophometrically weighted.
QPSK	Quaternary phase-shift keying or 4PSK. A four-level modulation method whereby the information is contained in any one of four phases of the transmitted carrier, i.e., 01 = 0-degree phase shift, 10 = 90-degree phase shift,

11 = 180-degree phase shift, and

00 = 270-degree phase shift.

Quantizing Distortion (Quantizating Noise)	Common in digital transmission, a noise generated by encoding the VF samples, i.e., $\text{Quantizing Noise}_{(dB)} = 20 \log_2 N$, where N = number of encoded levels per sample.
Reliability	This term applies to either equipment or propagation. In general, this is the probability that a system or a part thereof will operate as intended during a certain period of time.
Reserve Time (Batteries)	The time the system can operate from the dc battery supply exclusively.
RFI	Radio frequency interference.
Scintillation	A random fluctuation of a received signal about its mean value, the deviations being relatively small. Scintillation fading is usually rapid, with many fades occurring within one minute.
SCR Charger	Silicon-controlled rectifier charger. Similar to the mag-amp charger, the SCR charger uses silicon-controlled rectifiers instead of conventional diodes.
SHF	Super high frequency. That band of frequencies encompassing 3000 to 30,000 MHz.
Signaling	Intelligence conveyed between switching facilities so one subscriber may be connected to another. Signaling consists of the following types: subscriber and interswitch. Signaling also consists of the following functional types: supervisory and address.
S/N	Signal-to-noise ratio, usually expressed in dB.
SSB	Single sideband. A form of amplitude modulation in which information is transmitted on one sideband only.
SSBSC	Single sideband suppressed carrier. Commonly used in frequency division multiplexers.

Supervisory Signaling	A two-state form of signaling between subscribers and Central Office switch or between switches. This signaling provides the following types of information: calling party off hook, calling party on hook, called party off hook, and called party on hook.
TDM	Time division multiplex.
$TE_{1,1}$ Mode	TE stands for transverse electric wave. In circular waveguide, the $TE_{1,1}$ mode is the dominant wave.
Thermal Noise	See Johnson noise.
Throughput	The amount of useful information that a data transmission system can deliver end-to-end. Parity bits, stop and start elements, etc., reduce throughput.
twt	Traveling wave tube. These devices are used as RF power amplifiers in applications where 30 dB or more gain is required.
VF	Voice frequency. A voice frequency channel extends from 300 Hz to approximately 3.4 kHz.
VU	Volume unit. A measure of level, usually used for complex audio signals, such as voice or program traffic. The unit is logarithmic. For a continuous sine wave across 600 ohms, 0 dBm = 0 VU. For complex signals in the VF range, we say $$\text{Power}_{\text{dBm}} = \text{VU} - 1.4 \text{ dB}.$$
Z_0	Characteristic impedance of a transmission line.

DAT
FILM