Bi-Directional 915 MHz Amplifier

- **6 Watts RF power output** (Min. 10 watts is possible)
- **16 dB receive gain with bandpass filter**

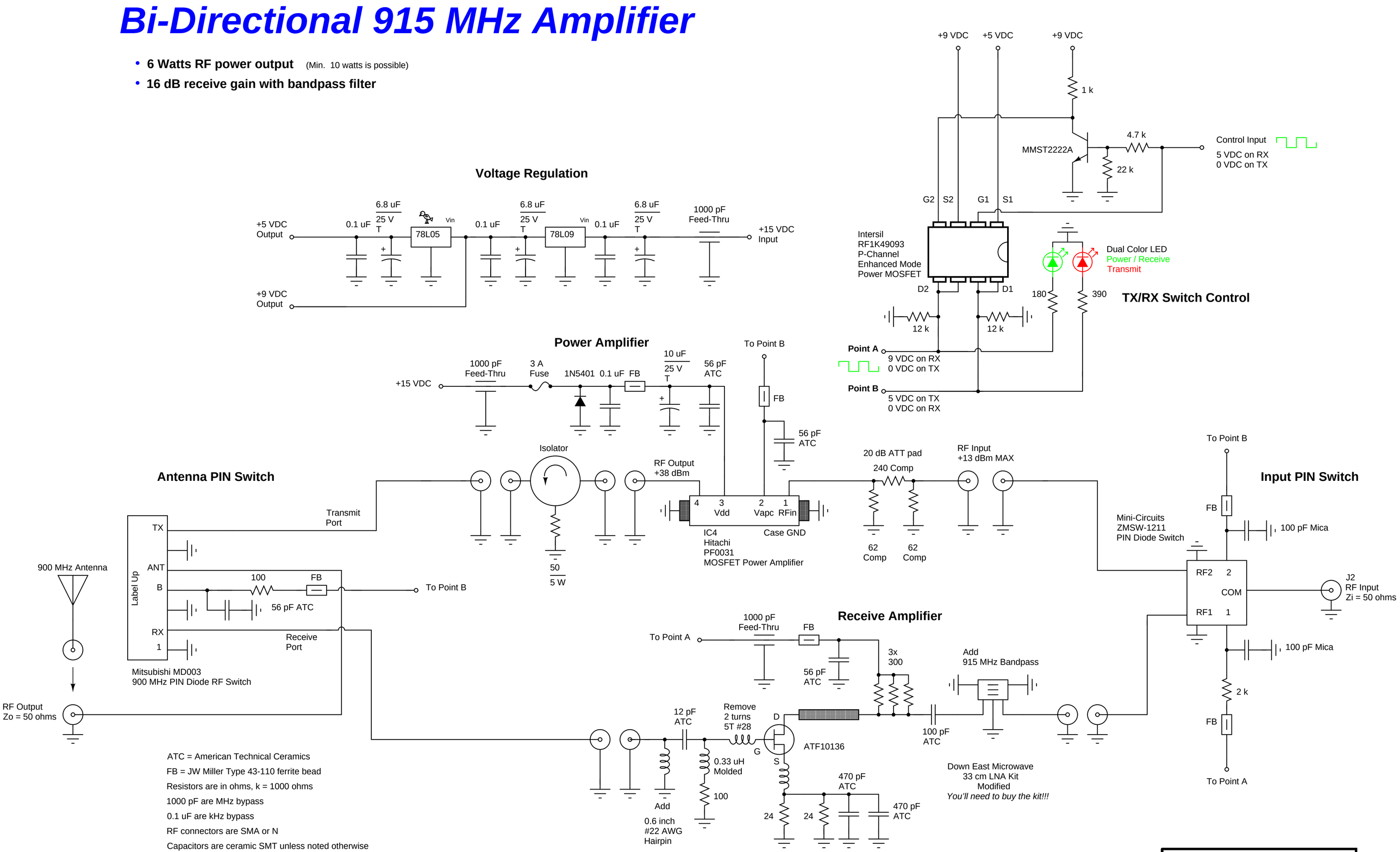

ATC = American Technical Ceramics

FB = JW Miller Type 43-110 ferrite bead

Resistors are in ohms, k = 1000 ohms

1000 pF are MHz bypass

0.1 uF are kHz bypass

RF connectors are SMA or N

Capacitors are ceramic SMT unless noted otherwise

Use Teflon PCB material or other low dielectric material (if possible)

All resistors are chip style carbon film, 5%

0603 or 0402 in RF or RF bypass sections
0805 for other

Green Bay Professional Packet Radio 915 MHz Bi-Directional Amplifier		
Rev 3.2	07/17/2001	Sheet 1 of 1
		www.gbppr.org